SZ
4315.150

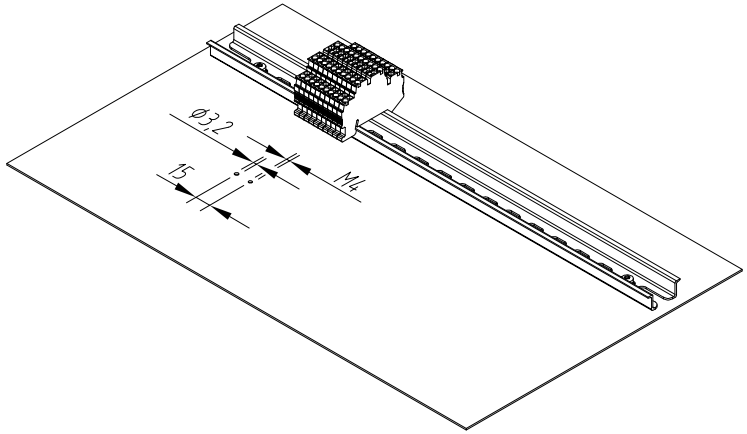

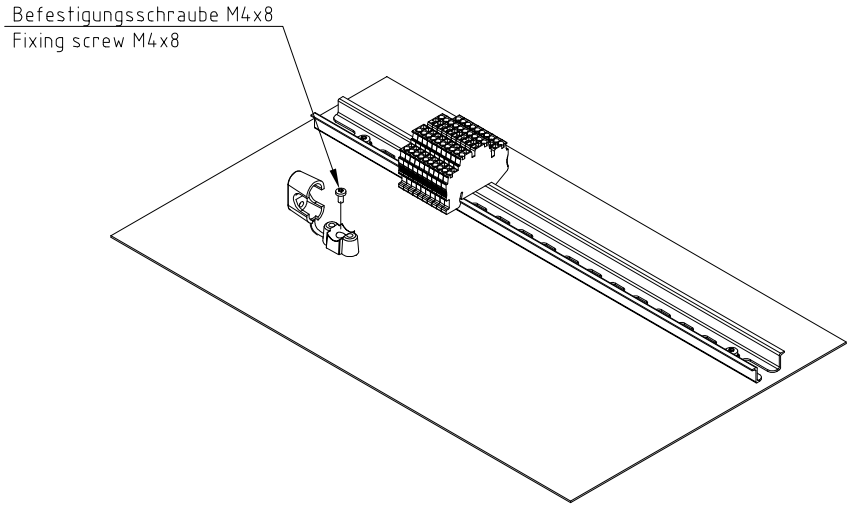

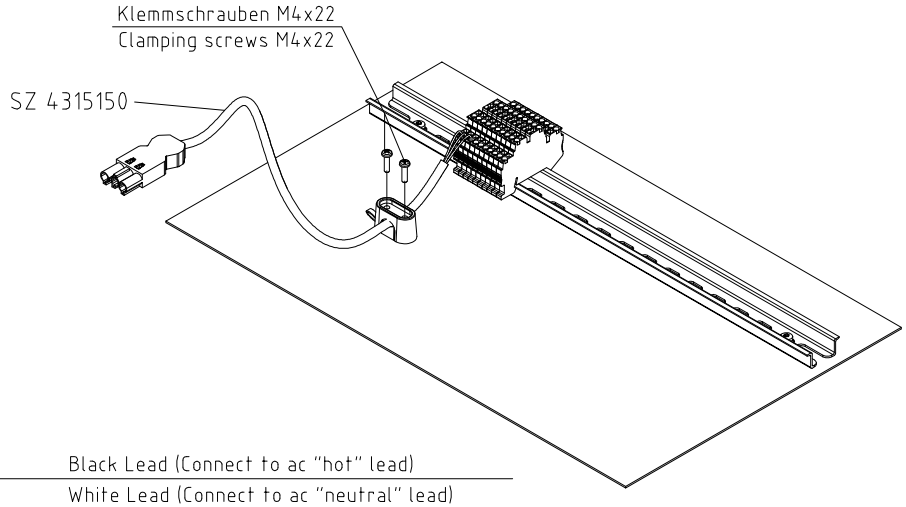

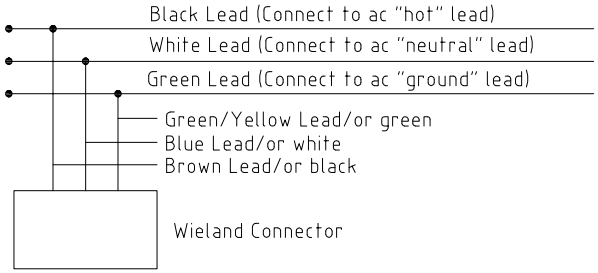

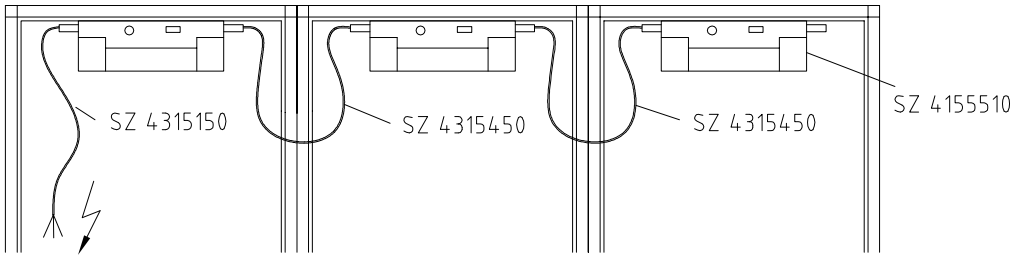

Zchng.-Nr. / No. of dwg. : A4701101SZ Versandbeutel-Nr. / No. of accessory bag :	Ident-Nr. / Part No. : 331070 Lieferanten-Nr. / No. of supplier :