Blue e
roof-mounted cooling units

Flexibility of roof mounting

Cut your costs
- All three-phase cooling units are suitable for a voltage range of 400 V, 50 Hz and 460 V, 60 Hz without rewiring. No need for expensive additional transformers.

Flexible output
- Just 3 mounting cut-outs for 6 different output categories provide investment security and facilitate easy adaptation of the cooling output to the ambient conditions and the installed heat loss

Rittal platform strategy
- TopTherm air/water heat exchangers are also compatible with the mounting cut-outs

Optimum flow conditions

Targeted air routing inside the enclosure
- The internal air circulation is targeted and effective: The heated air is extracted centrally. Chilled air is discharged via up to four spigots positioned in the corners of the base plate and may be routed in a controlled manner into the lower enclosure chamber via the optional ducting system. The result is highly effective cooling and the avoidance of air short-circuits. The targeted air circulation inside the enclosure via ducts also prevents the creation of hot-spots.

Integral components

Electrical condensate evaporator
- Condensate arising inside the enclosure or on the evaporator coil of the cooling unit is effectively evaporated. The evaporator device inside the cooling units has a very high evaporation output (several litres per day). This is achieved thanks to the principle of direct evaporation.

Hydrophobic RiNano coating
- The condenser with standard hydrophobic RiNano coating ensures a longer, constant cooling output and eliminates the need for filter media in many areas.

Condensate routing

All roof-mounted cooling units have electrical condensate evaporation.
Additional condensate routing is provided merely as an extra safeguard only. Any condensation which forms on the evaporator coil (with high humidity and low enclosure interior temperatures) is routed to the right and/or downwards out of the device via a drain in the evaporator tray. For this purpose, a piece of hose should be connected to one of the two condensate nozzles (1 or 2). **The drain which is not required should be tightly sealed. The condensate must be able to run off freely. If the condensate is to be drained off over a greater distance, then care must be taken to ensure that the hose is free from kinks** and checked for correct drainage. Units with an e-Comfort controller are additionally equipped with a condensate alarm.

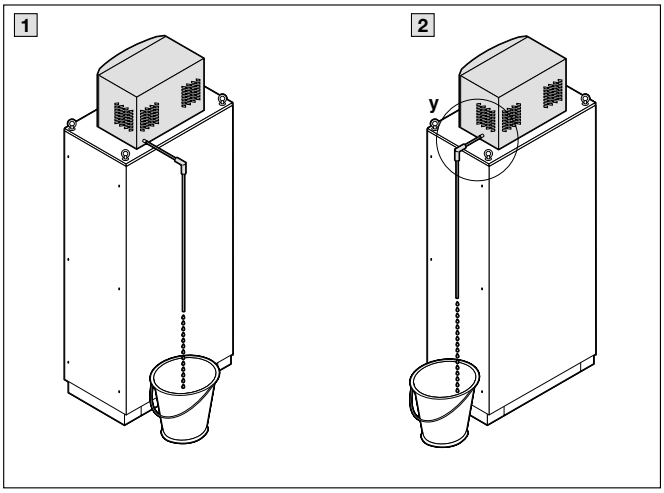

1 Condensate discharge rear

2 Condensate discharge right

Note:
Condensate discharge (wall-mounted units)
For wall-mounted units, a hose should be connected to the condensate nozzle on the bottom of the unit.

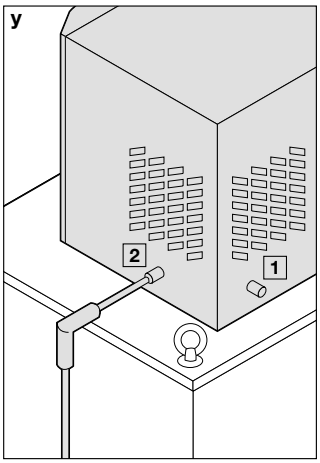

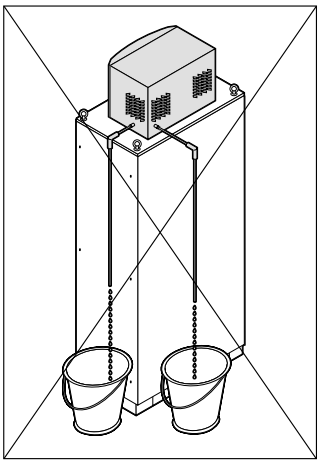

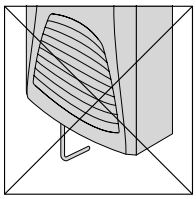

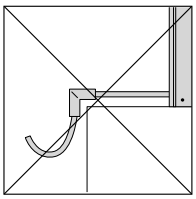

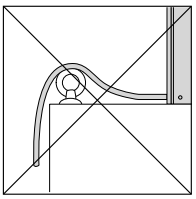

The condensate drain pipe should be laid with a gradient, taking care to ensure there are no kinks in the pipe!

Blue e+ roof-mounted cooling unit

Available with 1.3 kW total cooling output

Modular climate control concept

Generation Blue e
Permanent energy savings
with Rittal cooling units.

Less is more! We offer almost limitless application possibilities from just four cooling modules and six door modules. The best cooling technology, complete and ready for use – without having to make mounting cut-outs. The existing sheet steel doors are easily exchanged for climate control doors with cooling modules. These can also be exchanged or upgraded while the system is operational.

Benefits at a glance:

- Modular design – for specific size, cooling power and voltage combinations
- Combination of VX25 climate control door and cooling module
- One item number each for the door and climate cooling module
- May be linked to the IoT interface via the Blue e IoT adaptor

Important:

- A base/plinth is required for operation

Modular climate control concept

Extensive modularity

- Create your individual climate control solution from the climate control door and the cooling module in just a few simple steps
- Choose from different options with different dimensions, cooling outputs and voltages

Infinite possibilities

- Seamless baying and perfect integration. Cooling of a bayed enclosure suite is easily achieved, even under awkward room conditions,such as low ceiling heights.
- No mounting cut-outs are required

Wide range of options

1 Cooling module, 1500 W total cooling output, available with two voltage options

2 Cooling module, 2500 W total cooling output, available with two voltage options

3 Climate control door for installing cooling modules in 600 or 1200 mm wide VX25 enclosures, cooling module on the right, in 1800 and 2000 mm height

4 Climate control door for installing cooling modules in 800 mm wide, 1-door VX25 enclosures, in both 1800 and 2000 mm height

5 Climate control door for installing cooling modules in 1200 mm wide VX25 enclosures, cooling module on the left, in both 1800 and 2000 mm height

Benefit:
For 1200 mm wide VX25 enclosures, the existing hinged door may be used, irrespective of the device position (left or right)

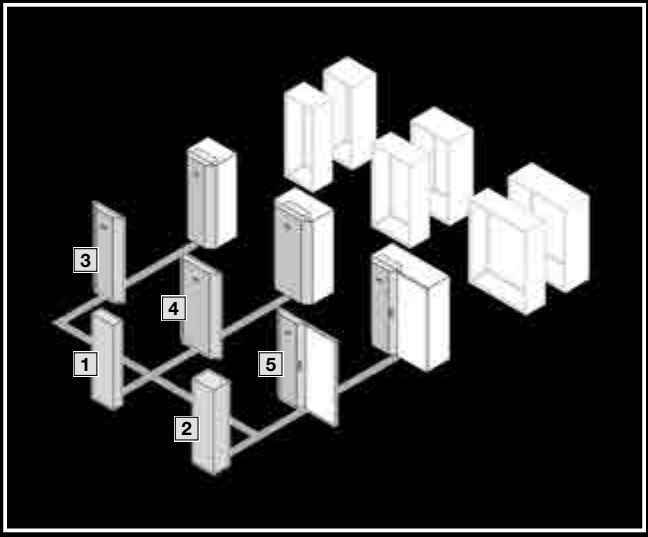

Enclosure heaters

Enclosure heaters are used to prevent the formation of condensation inside the enclosure and maintain a constant minimum operating temperature (e.g. when the system is switched off overnight). Rittal TopTherm heaters, with self-regulating PTC technology, ensure constant heat distribution with outputs in the range of 10 W – 150 W, for those not fitted with a fan and 250 W – 800 W for fan-assisted options. For heaters with fans, a minimum safety clearance of 300 mm at the top must be observed, and the equivalent figure for heaters without fans is 100 mm. In each case the thermal safety clearance to the sides of 60 mm, and 100 mm at the bottom is required.

Fast assembly system:

- Quick-connect terminal for power supply
- Terminal suitable for parallel connection of an additional heater
- Minimal wiring work

Superior efficiency:

- Energy-saving self-regulating PTC technology
- Superior thermal output with an identical construction size
- Constant distribution of heat

Greater flexibility:

- Output range: 10 – 800 W
- Attachment on a 35 mm top hat rail or mounting plate

Enclosure heaters

Fast assembly

- Snap-fastening onto 35 mm support rails EN 50 022
- Direct screw-fastening onto the mounting plate
- Quick-connect terminal for power supply (spring terminal)
- No need for any other terminals
- No wiring required

Energy-efficient design

- PTC technology for constant heat distribution
- Computational Fluid Dynamics (CFD)-assisted design for superior heating performance with the same construction size

Constant continuous thermal output

- Without fan 10, 20, 30, 50, 75, 100 and 150 W
- Rated operating voltage: 110 – 240 V, AC/DC 50/60 Hz
- With fan 250, 400 and 800 W
- Rated operating voltage: 115 V, 50/60 Hz and 230 V, 50/60 Hz

Self-regulating PTC technology

Energy-efficient PTC technology and design optimisation on the basis of computational fluid dynamics (CFD) permit improved heating outputs from units of the same size compared to the previous product versions.

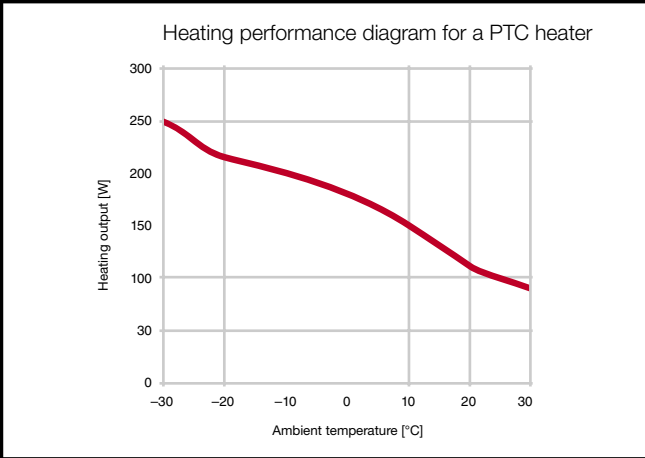

Enclosure heaters

Project management

The required thermal output is calculated from:

$$\dot{Q}_H = A \cdot \Delta T \cdot k$$

Heating performance diagram

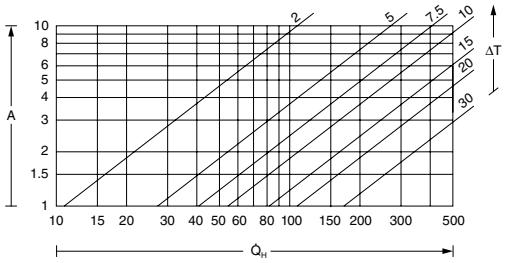

$\dot{Q}_H$ = Thermal output (W)
A = Enclosure surface area to IEC 890 (m^2)
ΔT = Temperature difference (K)
k = Heat transfer coefficient

Based on:
Indoor siting, static air,
heat transfer coefficient k = 5.5 W/m^2 K

For outdoor siting (moving air):
Double the determined thermal output

Even temperature distribution

Via a CFD analysis, even temperature distribution in the (empty) enclosure is observed when using a 400 W enclosure heater following a heating period of approx. 30 minutes. According to the CFD analysis, positioning of the enclosure heater in the base area of the enclosure is essential for even temperature control of the enclosure, since those areas located beneath the heater are only minimally warmed.

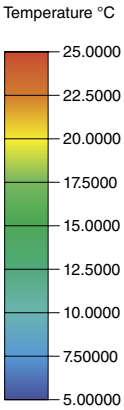

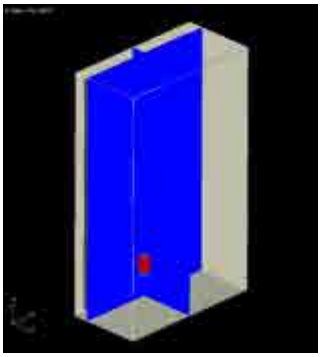
Start

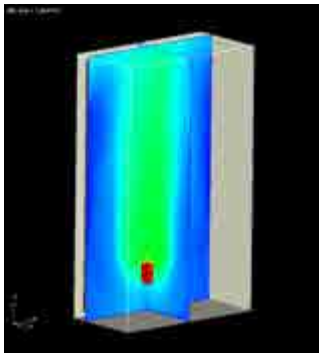
After 5 minutes

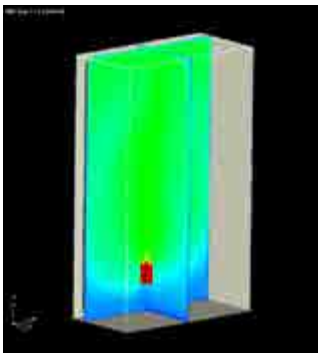
After 15 minutes

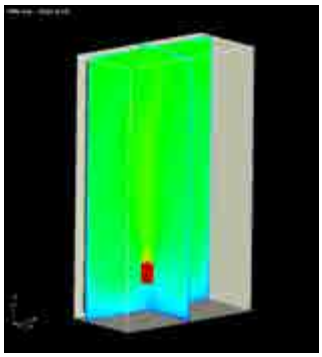
After 30 minutes

Cutting carbon emissions the Blue e+ way

More about carbon footprints:

www.rittal.com/CO2Footprint

Rittal – The System.

Faster – better – everywhere.

- Enclosures
- Power Distribution
- Climate Control
- IT Infrastructure
- Software & Services

You can find the contact details of all
Rittal companies throughout the world here.

www.rittal.com/contact

XWWW00107EN2307

ENCLOSURES | POWER DISTRIBUTION | CLIMATE CONTROL | IT INFRASTRUCTURE | SOFTWARE & SERVICES

FRIEDHELM LOH GROUP