Rittal – The System.

Faster – better – everywhere.

PDU metered/metered plus/switched/managed

Model No.:

7979.XXX
(X can be any number between 0 and 9)

Regulatory model code:

DK01, DK02, DK03, DK04

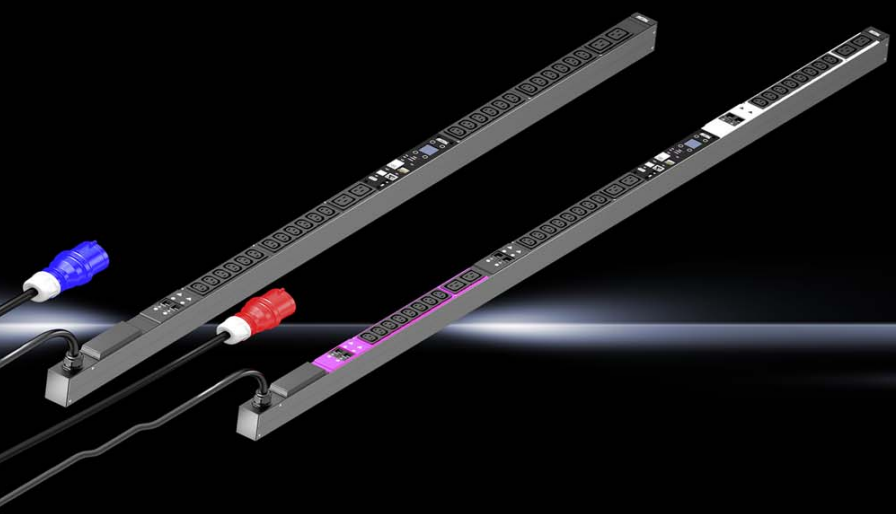

Assembly, installation and operating instructions

ENCLOSURES | POWER DISTRIBUTION | CLIMATE CONTROL | IT INFRASTRUCTURE | SOFTWARE & SERVICES

FRIEDHELM LOH GROUP

Safety instructions

DE **Bestimmungsgemäße Verwendung**

Dieses Produkt dient ausschließlich als Zubehör zur Bereitstellung der elektrischen Energieversorgung und -verteilung in Einrichtungen der Informationstechnik. Vorgesehene Einsatzorte sind Schränke und Schrank-Anreihungen sowie Rahmengestelle zur Aufnahme von Server- und Netzwerktechnik in Sicherheits- und Technikräumen. Bei abweichender Anwendung ist mit Rittal Rücksprache zu halten. Die Produkte dürfen ausschließlich mit dem von Rittal vorgesehenen Systemzubehör kombiniert und betrieben werden.

Sicherheitshinweise

Das Gehäuse dieses Produktes darf nicht geöffnet werden! Das Produkt darf nur innerhalb der in den technischen Daten spezifizierten Grenzen betrieben werden! Das Produkt darf nicht in Kontakt mit Wasser, aggressiven oder entzündbaren Gasen und Dämpfen geraten! Das Abschalten eines Ausgangssteckplatzes stellt keine sichere Lasttrennung dar!

EN **Intended use**

This product serves only as an accessory for the supply and distribution of electrical energy in information technology systems. Envisaged deployment locations are enclosures and enclosure systems, as well as racks for the installation of server and network technology in secure and technology rooms. Please consult Rittal prior to implementing other applications. These products must be combined and operated only with the system accessories envisaged by Rittal.

Safety instructions

The casing of this product must not be opened! The product can be used only within the limits of the specified technical data! The product must not come into contact with water, aggressive or flammable gases and vapours! Switching off an output slot does not constitute a safe load disconnection!

FR **Utilisation conforme**

Ce produit est un accessoire de distribution de courant pour les installations d'infrastructures IT. Les conditions d'intégration prévues sont les baies individuelles ou juxtaposées, les racks pour applications serveurs et réseaux dans des locaux techniques, dédiés et sécurisés. Pour toute autre application, veuillez contacter Rittal. Les produits doivent être combinés et utilisés exclusivement avec les accessoires Rittal prévus.

Consignes de sécurité

Le boîtier du produit ne doit pas être ouvert ! Le produit doit être utilisé uniquement dans les limites spécifiées dans les caractéristiques techniques. Le produit ne doit pas être en contact avec de l'eau, des gaz et vapeurs agressifs ou inflammables ! La désactivation d'une prise ne constitue pas un sectionnement sécurisé !

NL **Voorgeschreven gebruik**

Dit product dient uitsluitend als accessoire voor de elektriciteitsvoorziening en stroomverdeling binnen installaties voor informatietechniek. Beoogde gebruikslocaties zijn kasten en kastsystemen, evenals frames voor de montage van server- en netwerktechniek in beveiligings- en technische ruimten. Bij gebruik dat hiervan afwijkt, dient u contact op te nemen met Rittal. De producten mogen uitsluitend met de door Rittal aangegeven systeemtoebehoren worden gecombineerd en gebruikt.

Veiligheidsvoorschriften

De behuizing van dit product mag niet worden geopend. Het product mag uitsluitend binnen de in de technische gegevens aangegeven grenzen worden gebruikt. Het product mag niet in contact komen met water of met bijtende of ontvlambare gassen en dampen. Het uitschakelen van een uitgaand contact vormt geen veilige ontkoppeling van de spanning.

SE **Ändamålsenlig användning**

Denna produkt är endast avsedd som tillbehör, för att ge elektrisk energiförsörjning och -fördelning i anordningar för informationsteknik. Avsedda användningsplatser är skåp eller ihopbyggda skåpsystem samt ramstativ för server- och nätverksteknik i säkerhets- och teknikrum. All annan användning är endast tillåten efter samråd med Rittal. Produkterna får endast kombineras och användas med de systemtillbehör som föreskrivits av Rittal.

Säkerhetsinstruktioner

Denna produkts hölje får inte öppnas! Produkten får endast köras inom de angivna gränser som specificeras i avsnittet om tekniska data! Produkten får inte komma i kontakt med vatten eller aggressiva eller brännbara gaser och ångor! Frånkoppling av en utgångskontakt innebär inte att lasten är säkert frånskild!

IT **Impiego conforme alle norme**

Questo prodotto può essere utilizzato esclusivamente come accessorio per la fornitura e la distribuzione di energia elettrica nei dispositivi IT. Il suo impiego è previsto all'interno di armadi di comando, anche in batteria, nonché in rack per l'alloggiamento di server e apparecchi di rete nei locali tecnici e di sicurezza. Per un uso diverso da quello specificato, rivolgersi al proprio referente Rittal. I prodotti devono essere combinati e utilizzati unicamente con gli accessori di sistema previsti da Rittal.

Istruzioni di sicurezza

Non aprire l'alloggiamento del prodotto. Il prodotto deve essere utilizzato rispettando i valori limite specificati nei dati tecnici. Evitare che il prodotto venga a contatto con acqua, gas aggressivi o infiammabili e vapore. La disattivazione del circuito di alimentazione di una presa di uscita non rappresenta un modo sicuro per effettuare la separazione del carico.

ES **Uso correcto**

Este producto debe ser utilizado exclusivamente como accesorio para el suministro de energía eléctrica y su distribución en instalaciones de tecnologías de la información. El montaje debe realizarse en armarios de distribución y armarios ensamblados, así como en racks para alojar servidores y equipos de redes en salas técnicas y de seguridad. Para otro tipo de aplicación debe consultarse previamente a Rittal. Estos productos deben combinarse y utilizarse exclusivamente con los accesorios previstos para ello por parte de Rittal.

Instrucciones de seguridad

¡No abrir la carcasa del producto! ¡El producto debe utilizarse exclusivamente dentro de los límites especificados en los datos técnicos! ¡El producto no debe entrar en contacto con agua, ni con gases y vapores agresivos o inflamables! ¡La desconexión de un punto de conexión de toma no garantiza una separación de la carga!

FI **Määräystenmukainen käyttö**

Tämä tuote on ainoastaan lisävaruste sähköisen virransyötön ja -jakelun valmisteluun informaatioteknisissä laitteissa. Tarkoitettuja käyttöalueita ovat kaapit ja rivitetyt kaapit sekä runkoalustat palvelin- ja verkkotekniikan käyttämiseen turva- ja tekniikkatiloissa. Muunlaisesta käytöstä on sovittava Rittalin kanssa. Näitä tuotteita saa yhdistellä ja käyttää vain Rittalin tarkoittamien järjestelmälisävarusteiden kanssa.

Turvallisuusohjeet

Älä avaa tämän tuotteen koteloa. Käytä tuotetta vain teknisissä tiedoissa mainittujen rajojen sisällä. Tuote ei saa joutua kosketuksiin veden tai aggressiivisten tai syttyvien kaasujen tai höyryjen kanssa. Lähtöaukkojen katkaiseminen ei ole turvallinen kuormankatkaisutapa.

DK **Forskriftsmæssig anvendelse**

Dette produkt må udelukkende anvendes som tilbehør til etablering af elektrisk energiforsyning og -fordeling i informationsteknologiske anlæg. Anvendelsesstedet er skabe og skabsrækker samt IT-racket til montering af server- og netværkskomponenter i sikkerheds- og teknikrum. Enhver anden anvendelse må kun ske efter aftale med Rittal. Produkterne må kun kombineres og ibrugtages sammen med systemtilbehør, der er godkendt af Rittal.

Sikkerhedsanvisninger

Produktets kabinet må ikke åbnes! Produktet må kun anvendes inden for de grænseværdier, der er angivet i de tekniske data. Produktet må ikke komme i kontakt med vand, skadelige eller letantændelige gasser eller dampe! Afbrydelsen af en udgangskortplads udgør ikke en sikker lastfrakobling!

PL **Używaj zgodnie z przeznaczeniem**

Ten produkt służy wyłącznie jako akcesorium do zapewniania zasilania i rozdziału energii elektrycznej w urządzeniach IT. Przewidywanymi miejscami zastosowań są szafy i szeregi szaf, a także stelaże ramowe do montażu techniki serwerowej i sieciowej w pomieszczeniach bezpieczeństwa i technicznych. W przypadku innych zastosowań należy skontaktować się z Rittal. Produkty można łączyć i użytkować wyłącznie z przewidzianymi akcesoriami systemowymi Rittal.

Wskazówki dotyczące bezpieczeństwa

Nie wolno otwierać obudowy tego produktu. Produkt może być użytkowany tylko w granicach określonych w danych technicznych. Produkt nie może mieć kontaktu z wodą, agresywnymi lub łatwopalnymi gazami i oparami. Wyłączanie gniazdka wyjściowego nie gwarantuje bezpiecznego rozłączenia.

CZ **Použití v souladu s určením**

Tento produkt slouží výhradně jako příslušenství pro napájení a rozvody elektrické energie v zařízeních určených pro IT technologie. Instalace a umístění jen výhradně v aplikacích k tomu určených. Jiné použití konzultujte se společností Rittal. Produkty se smí kombinovat a provozovat pouze se systémovým příslušenstvím společnosti Rittal.

Bezpečnostní pokyny

Zařízení se nesmí otevírat! Provozovat se smí pouze v rozsahu určenému technickými parametry! Produkt se nesmí dostat do kontaktu s vodou, agresivními nebo vznítitelnými plyny a výpary! Odpojení výstupu nepředstavuje bezpečné odpojení zátěže!

BG **За правидна употреба**

Този продукт служи само като принадлежност за осигуряване на електрозахранване и електроразпределение за информационно-технологично оборудване. Предвидените места на употреба са шкафове и системи от шкафове, както и носещи рамки за поставяне на сървърно и мрежово оборудване в помещения за защита и съхранение на техника. За друго приложение трябва да се консултирате с Rittal. Продуктите може да се комбинират и използват само с предвидените от Rittal принадлежности.

Инструкции за безопасност

Корпусът на този продукт не трябва да се отваря! Продуктът може да се използва само в рамките на определените в техническите данни граници! Продуктът не трябва да влиза в контакт с вода, агресивни или запалими газове и пари! Изключването на изходно гнездо не представлява безопасно отделяне на товара!

GR **Προβλεπόμενη χρήση**

Αυτό το προϊόν χρησιμεύει αποκλειστικά ως πρόσθετος εξοπλισμός για τη διάθεση και διανομή της τροφοδοσίας ηλεκτρικής ενέργειας σε εγκαταστάσεις πληροφοριακών συστημάτων. Προβλεπόμενοι χώροι χρήσης είναι ερμάρια και συνδυασμοί ερμαρίων, καθώς και πλαίσια τοποθέτησης συστημάτων διακομιστών και δικτύων σε χώρους εξοπλισμού ασφαλείας και τεχνικού εξοπλισμού. Για χρήση πέραν της προβλεπόμενης απαιτείται συνεννόηση με την Rittal. Τα προϊόντα επιτρέπεται να συνδυαστούν και να χρησιμοποιηθούν αποκλειστικά με τον πρόσθετο εξοπλισμό που προβλέπεται από την Rittal.

Υποδείξεις ασφαλείας

Δεν επιτρέπεται το άνοιγμα του περιβλήματος του συγκεκριμένου προϊόντος! Το προϊόν επιτρέπεται να τεθεί σε λειτουργία μόνον εντός των ορίων που ορίζονται στα τεχνικά χαρακτηριστικά! Το προϊόν δεν επιτρέπεται να έρθει σε επαφή με νερό και δραστικά ή εύφλεκτα αέρια και αναθυμιάσεις! Η απενεργοποίηση μίας υποδοχής εξόδου δεν αποτελεί ασφαλή τρόπο αποσύνδεσης φορτίου!

RO **Domeniul de utilizare**

Acest produs serveşte exclusiv ca accesoriu pentru asigurarea unor sisteme de furnizare şi distribuţie a energiei electrice în echipamente de tehnologia informaţiei. Locurile de utilizare prevăzute sunt dulapuri şi sisteme de dulapuri precum şi rackuri destinate instalarii serverelor si reţelisticii in camere tehnologice sau de securitate. Pentru o utilizare diferită, contactaţi mai întâi Rittal. Produsele pot fi combinate şi exploatate exclusiv cu accesoriile prevăzute de Rittal.

Instrucţiuni de siguranţă

Este interzisă deschiderea carcasei acestui produs! Produsul poate fi utilizat doar între limitele specificate în datele tehnice! Produsul nu poate intra în contact cu apă, gaze şi vapori agresivi sau inflamabili! Deconectarea unui slot de plecare nu constituie o separare a sarcinii în condiţii de siguranţă!

HR **Predviđena uporaba**

Ovaj proizvod služi isključivo kao pribor za osiguravanje opskrbe i raspodjele električne energije u uređajima informacijske tehnike. Predviđena mjesta primjene su ormari i skupine ormara kao i okvirna postolja za prihvat serverske i mrežne tehnike u sigurnosnim i tehničkim prostorijama. U slučaju odstupanja od navedene primjene potreban je prethodni dogovor s tvrtkom Rittal. Proizvodi se smiju kombinirati i puštati u rad isključivo uz pribor sustava koji predviđa tvrtka Rittal.

Sigurnosne upute

Kućište ovog proizvoda ne smije se otvarati! Proizvod se smije puštati u rad isključivo u granicama koje su definirane u tehničkim podacima! Proizvod ne smije doći u dodir s vodom, agresivnim ili zapaljivim plinovima i parama! Isklapanje izlaznog utičnog priključka ne predstavlja sigurno odvajanje od napona!

HU **Rendeltetésszerű használat**

Ez a termék kizárólag az elektromos áramellátás rendelkezésre állításához és elosztásához való tartozékként szolgál informatikai berendezésekben. Rendeltetésszerű alkalmazási helyek biztonsági és műszaki termekben a szerver- és hálózati technika rögzítésére szolgáló szekrények és sorolt szekrények, valamint vázkeretek. Ettől eltérő alkalmazás esetén a Rittal-lal kell konzultálni. A termékek kizárólag a Rittal által előírt rendszertartozékkal kombinálhatók és üzemeltethetők.

Biztonsági utasítások

A termék házát felnyitni tilos! A termék csak a műszaki adatokban megadott határértékeken belül üzemeltethető! A termék nem léphet érintkezésbe vízzel, agresszív vagy gyúlékony gázokkal és gőzökkel! Egy kimeneti csatlakozó lekapcsolása nem jelent biztonságos terhelésszakaszolást!

LT **Naudojimas pagal paskirtį**

Šį produktą galima naudoti tik kaip prietaisą elektros energijai tiekti ir paskirstyti informacinių technologijų sistemose. Šie įrenginiai montuotini skyduose / spintose ir į eilę sujungtuose skyduose / spintose, ar rėmų konstrukcijose, skirtose talpinti duomenų tinklo įrengimus ar serverius, esančiose atskirtose saugumo zonose ir techninėse patalpose. Norėdami produktą naudoti kitaip, nei nurodyta, pasitarkite su „Rittal“ atstovais. Šiuos produktus galima jungti ir eksploatuoti tik su „Rittal“ nurodytais sisteminiais priedais.

Saugos nurodymai

Negalima atidaryti šio produkto gaubto! Eksploatuojant produktą griežtai laikykitės techninių duomenų skyriuje nurodytų normų! Ant produkto negali patekti vanduo, negarantuoja neleistinas kontaktas su agresyviom ar degiom dujom, reikia jį saugoti nuo garų! Išvesties lizdo atjungimas, kad apkrova bus saugiai atjungta!

EE **Sihtotstarbeline kasutus**

Käesolev seade on ettenähtud ainult lisaseadmena elektrienergia jagamiseks ja toite tagamiseks infotehnoloogia seadmetes.Seade on ettenähtud kasutamiseks selleks ettenähtud tehnilistesse ruumidesse paigaldatud kappides, kapiridades ja avatud raamides, mis on ettenähtud serverite ja võrguseadmete paigaldamiseks. Teistesse ruumidesse paigaldamine tuleb kooskõlastada Rittal-i ga. Tooteid tohib komplekteerida, kombineerida ja kasutada ainult Rittali lisatarvikutega.

Ohutusjuhised

Toote korpuse avamine on keelatud! Toodet tohib kasutada vaid tehnilistes andmetes täpsustatud piirides! Toode ei tohi kokku puutuda vee, agressiivsete või tuleohtlike gaaside ja aurudega! Väljundipesast välja lülitamine ei taga ohutut vooluvõrgust eraldamist!

LV **Paredzētais lietošanas veids**

Šis produkts ir palīgierīce elektroenerģijas piegādei un sadalei informācijas tehnikas ierīcēs. To ir paredzēts lietot skapjos un skapju sistēmās, kā arī serveru un tīklu ierīču statnēs drošības un tehniskajās telpās. Ja lietošanas veids atšķiras, jāsazinās ar Rittal. Šos produktus drīkst kombinēt un lietot tikai ar Rittal norādītajiem sistēmas piederumiem.

Drošības norādījumi

Šī produkta korpusu nedrīkst atvērt! Lietojot produktu, nedrīkst pārsniegt tehniskajos datos norādītās robežvērtības! Produkts nedrīkst saskarties ar ūdeni, agresīvām vai viegli uzliesmojošām gāzēm un tvaikiem! Izslēdzot izejas pieslēgvietu, slodzes ķēde netiek atvienota!

SI **Predvidena uporaba**

Ta izdelek se uporablja izključno kot oprema za oskrbo z električno energijo in distribucijo električne energije v napravah informacijske tehnologije. Predvidena mesta uporabe so omarice in nizi omaric ter ogrodja za opremo strežnikov in omrežij v varnostnih in tehničnih prostorih. Glede uporabe, ki ni v skladu s predvideno, se posvetujte s podjetjem Rittal. Izdelke lahko združujete in uporabljate izključno z dodatno opremo, ki jo za to predvideva podjetje Rittal.

Varnostni napotki

Ohišja tega izdelka ni dovoljeno odpirati. Izdelek lahko uporabljate samo v okviru omejitev, ki so določene v tehničnih podatkih. Izdelek ne sme priti v stik z vodo, agresivnimi in vnetljivimi plini ter parami. Izklop izhodne vtičnice ne zadostuje za varen odklop odjemalca.

SK **Používanie v súlade s účelom**

Tento produkt slúži výlučne ako príslušenstvo na zabezpečenie dodávky a rozvodu elektrickej energie pre zariadenia informačných technológií. Zamýšľaná oblasť použitia zahŕňa skrine a zostavy skríň, ako aj rámové podstavce pod serverovú a sieťovú techniku v bezpečnostných a technických miestnostiach. Iné použitie je nutné konzultovať so spoločnosťou Rittal. Produkty je povolené kombinovať a prevádzkovať výlučne so systémovým príslušenstvom, ktoré schválila spoločnosť Rittal.

Bezpečnostné pokyny

Nie je povolené otvárať kryt tohto produktu! Produkt je povolené prevádzkovať len v rámci hraničných hodnôt uvedených v technickej špecifikácii! Produkt nesmie prísť do kontaktu s vodou, agresívnymi alebo horľavými plynmi a výparmi! Vypnutím výstupného slotu nie je zaručené bezpečné odpojenie od prívodu elektrickej energie!

PT **Utilização**

Este produto deve ser usado exclusivamente como acessório para a disponibilização de alimentação e distribuição de energia elétrica em instalações de tecnologia da informação. Locais previstos para aplicação são armários e módulos de armários, bem como racks destinados ao acondicionamento de equipamentos de servidores e redes montados em salas de segurança e técnica. Outras aplicações apenas são permitidas após consultar a Rittal. Os produtos só devem ser combinados e utilizados com os acessórios do sistema Rittal.

Instruções de segurança

Não é permitido abrir a carcaça deste produto! O produto só deve ser utilizado nos limites especificados nos dados técnicos! O produto não deve entrar em contato com a água, gases e vapores tóxicos, agressivos ou inflamáveis! O desligamento de uma tomada individual não significa que a corrente elétrica foi interrompida com segurança!

EN

Foreword

Dear Customer!

Thank you for choosing a PDU metered/metered plus/ switched/managed power distribution unit (hereafter referred to as "PDU") or a RCM Inline Meter from Rittal!

We wish you every success.

Yours,
Rittal GmbH & Co. KG

Rittal GmbH & Co. KG
Auf dem Stuetzelberg

35745 Herborn
Germany

Tel.: +49(0)2772 505-0
Fax: +49(0)2772 505-2319

E-mail: info@rittal.com
www.rittal.com
www.rittal.de

We are always happy to answer any technical questions regarding our entire range of products.

EN

Contents

1 Documentation notes 7
1.1 General 7
1.2 CE labelling 7
1.3 Storing the documents 7
1.4 Symbols used in these operating instructions 7
1.5 Associated documents 7

2 Safety instructions 8
2.1 General safety instructions 8
2.2 Operating and technical staff 8
2.3 IT safety instructions 8
2.3.1 Measures for products and systems 8
2.3.2 Further guidelines for cyber security and system hardening 9

3 Product description 10
3.1 Functional description 10
3.2 Intended use, foreseeable misuse 10
3.3 Supply includes 10

4 Transport and handling 12
4.1 Transport 12
4.2 Storage 12
4.3 Unpacking 12

5 Installation 13
5.1 Safety instructions 13
5.2 Siting location requirements 13
5.3 Assembly procedure 13
5.3.1 Installation with the VX IT/TS IT bracket 13
5.3.2 Mounting with the universal bracket on the VX IT enclosure frame 14
5.3.3 Mounting the PDU on the cable tray 14
5.3.4 Mounting the RCM and the 19" PDU in the 19" level 15
5.4 Electrical connection of the PDU 15
5.4.1 Requirements concerning the electrical connection 15
5.4.2 Connecting to the mains supply 16
5.4.3 Connecting equipment 16
5.4.4 Further configuration 17

6 Commissioning the PDU 18
6.1 Switching on the PDU 18
6.2 Control and display elements 18
6.3 LED displays 18
6.3.1 Multi-LED displays 18
6.3.2 LED displays on the CAN bus connection 18
6.3.3 LED displays on the Ethernet interfaces 18
6.4 Acknowledging messages 19

7 Configuring the PDU 20
7.1 Operating using the control components on the front 20
7.1.1 Menu structure 20
7.1.2 Navigating through the menu structure 20
7.1.3 Entering the PIN 21
7.1.4 Entering values 21
7.1.5 Special settings and remarks 22
7.2 HTTP connection 23
7.2.1 Establishing the network connection 23
7.2.2 Access to PDU interface website 23
7.2.3 Changing the password after the first login 23
7.2.4 Changing the network settings 24
7.2.5 Settings 25
7.3 Telnet/SSH connection 25
7.3.1 Establishing the connection 25
7.3.2 Login to the PDU 25
7.3.3 Menu structure 26
7.3.4 Navigating through the menu structure 27
7.3.5 Entering values 27
7.3.6 Special settings and remarks 27
7.3.7 Performing switch commands 28
7.3.8 Logging off from the PDU 29

8 PDU master/slave mode 30
8.1 Interface characteristics in master/slave mode 30
8.2 Master/slave configuration of the PDU 30

9 Operating the PDU 32
9.1 General information 32
9.2 General operation 32
9.2.1 Layout of the screen pages 32
9.2.2 Left-hand navigation area 32
9.2.3 Tabs in the configuration area 32
9.2.4 Message display 33
9.2.5 Other displays 33
9.2.6 Changing parameter values 34
9.2.7 Undock function 35
9.2.8 Logging off and changing the password 36
9.2.9 Reorganising the connected components 36
9.3 Monitoring index tab 37
9.3.1 Device 37
9.3.2 Input 37
9.3.3 Alarm Relay (Output) 37
9.3.4 System 37
9.3.5 System Health 38
9.3.6 Memory 38
9.3.7 Webcam 39
9.3.8 Login 40
9.3.9 PDU-XXX 40
9.3.10 Total 40
9.3.11 Phase L1 41
9.3.12 Phase L2 and phase L3 43
9.3.13 Sockets for the variants PDU managed 43
9.3.14 RCM 44
9.3.15 Fuses 45
9.4 Configuration index tab 45
9.5 Network 46
9.5.1 TCP/IP configuration 46
9.5.2 SNMP Configuration 47
9.5.3 HTTP Configuration 48
9.5.4 File transfer configuration 48
9.5.5 Console 48
9.5.6 SMTP Configuration 48

Contents

EN

9.5.7 SMS Configuration ... 49
9.5.8 Modbus/TCP Configuration ... 49
9.5.9 Server Shutdown Configuration ... 50
9.5.10 OPC-UA Configuration ... 50
9.5.11 Redfish API service ... 50
9.6 System ... 51
9.6.1 Syslog ... 51
9.6.2 Units and Languages ... 51
9.6.3 Details ... 51
9.6.4 Date/Time ... 52
9.6.5 General ... 52
9.6.6 Display ... 52
9.6.7 Firmware Update ... 53
9.6.8 Import/Export settings ... 53
9.6.9 WebCam ... 53
9.6.10 Mobile ... 54
9.6.11 Certificates ... 54
9.7 Security ... 54
9.7.1 Groups ... 54
9.7.2 Users ... 54
9.7.3 LDAP Configuration ... 55
9.7.4 Radius Configuration ... 56
9.8 Device Rights ... 57
9.8.1 Inheriting Device Rights ... 58
9.8.2 Data types ... 58
9.9 Alarm Configuration ... 58
9.9.1 Notifications ... 59
9.9.2 E-mail Receivers ... 59
9.9.3 Trap Receivers ... 59
9.9.4 SMS Receivers ... 59
9.9.5 Alarm simulation ... 59
9.10 Logging ... 60
9.10.1 Defining a filter ... 60
9.10.2 Refreshing the view ... 61
9.10.3 Printing the display ... 61
9.10.4 Clearing the display ... 61
9.11 Tasks ... 61
9.11.1 Tasks tab ... 61
9.11.2 Defining the trigger expression ... 61
9.11.3 Selecting an action ... 62
9.11.4 Example of creating a task ... 63
9.11.5 Deactivating or deleting a task ... 64
9.12 Charts ... 64
9.12.1 Configuring a chart ... 64
9.12.2 Diagram view ... 65
9.12.3 Evaluating the CSV files ... 66
9.13 Dashboards ... 67
9.13.1 Basic settings ... 67
9.13.2 Configuring a dashboard ... 67
9.13.3 Saving a dashboard ... 69
9.13.4 Calling a dashboard ... 69
9.13.5 Calling the website via a mobile terminal ... 70
9.13.6 Exiting a dashboard ... 70
9.14 Access Configuration ... 70

10 Updates and data backup ... 71
10.1 Establishing an FTP connection ... 71
10.2 Performing an update ... 71
10.2.1 Notes for performing an update ... 71
10.2.2 Downloading the software update ... 71
10.2.3 Update via USB ... 71
10.2.4 Update via FTP or SFTP ... 72
10.2.5 Finalizing the update ... 72
10.3 Performing a data backup ... 72
10.4 Saving additional information locally ... 72

11 Inspection and maintenance ... 74
11.1 Safety instructions ... 74
11.2 Required work ... 74
11.2.1 Inspection ... 74
11.2.2 Servicing ... 74
11.3 Factory reset ... 74

12 Storage and disposal ... 75
12.1 Storage ... 75
12.2 Disposal ... 75

13 Technical specifications ... 76
13.1 General technical specifications ... 76
13.2 Allocation of fuses, phases and slots ... 78

14 Connection of sensors / Accessories ... 79
14.1 Alarm relay: Connection to switching devices ... 80

15 Glossary ... 81

16 Customer service addresses ... 82

EN

1 Documentation notes

1.1 General

The PDU portfolio comprises a high-volume product available off-the-shelf, a high-volume product built-to-order as well as PDUs configured-to-order. All PDUs from our standard range have the typical 7-digit Rittal Model No., while customised PDUs have a unique 7-digit KID number (beginning with a letter, such as Y) for easy identification and reordering.

The precise technical PDU description is stored in an alphanumerical "PDU ID", which should be quoted when requesting servicing of customised PDUs.

This information can be found on the PDU rating plate. Additionally, this and other product information (serial number etc.) can also be retrieved from the PDU website if necessary and via the display, by using different QR codes.

With the display switched on, the first QR code is displayed on the **Rittal** menu page by pressing and holding down the "ESC" key for 3 s (fig. 15, item 1) until the display timeout is reached or any other key is pressed.

The following operating instructions refer to the PDU and the RCM Inline Meter (19 inch) standard portfolio, unless stated otherwise in the text.

Minor deviations may arise during assembly and commissioning when using a built-to-order PDU.

1.2 CE labelling

Rittal GmbH & Co. KG hereby confirms the conformity of its PDU international power distribution unit with the provisions of the following Directives:

– EMC Directive 2014/30/EU
– Low Voltage Directive 2014/35/EU
– RoHS2 Directive 2011/65/EU

An appropriate declaration of conformity has been issued and can be supplied on request.

1.3 Storing the documents

The assembly, installation and operating instructions, as well as all other applicable documents, are an integral part of the product. They must be issued to everyone who works with the unit and must always be available and on hand for the operating and maintenance personnel.

1.4 Symbols used in these operating instructions

The following symbols are used in this documentation:

Danger!
A dangerous situation in which failure to comply with the instructions will result in death or severe injury.

Warning!
A dangerous situation which may lead directly to death or serious injury if the instructions are not followed.

Caution!
A dangerous situation which may lead to (minor) injuries if the instructions are not followed.

Note:
Indicates situations that can lead to material damage.

■ This symbol indicates an "Action Point" and shows that you should perform an operation/procedure.

1.5 Associated documents

– Installation Guide and Short User's Guide
– The assembly, installation and operating instructions for the sensors of the CMC III system connected to the PDU.

EN

2 Safety instructions

2.1 General safety instructions

Please observe the following general safety instructions for the installation and operation of the system:

- Assembly and installation of the PDU power distribution unit must only be performed by experienced, qualified specialists.
- Please observe the valid regulations for electrical installation in the country in which the PDU is installed and operated, and the national regulations for accident prevention. Please also observe any internal company regulations, such as work, operating and safety regulations.
- Use only original Rittal products or products recommended by Rittal in conjunction with the PDU power distribution unit.
- Please do not make any changes to the PDU that are not described in these assembly, installation and operating instructions or other associated manuals.
- The operational safety of the PDU is only warranted if used properly for the intended purpose. The technical specifications and limit values stated must not be exceeded under any circumstances. In particular, this applies to the specified ambient temperature range and IP protection category.
- The PDU must not be opened. It does not contain any parts that need servicing.
- Operating the system in direct contact with water, aggressive materials or inflammable gases and vapours is prohibited.
- Other than these general safety instructions, it is also essential to observe the specific safety instructions when carrying out the tasks described in the following chapters.
- The PDU is connected permanently to the grid and does **not** have a master switch for the all-pole power decoupling.
- Attention: The occurrence of a high touch current is possible, because the protective-conductor current can lie above 5 mA by summation of the protective-conductor currents of the connected devices. Thus, it is desirable to connect the device to the protective conductor of the building's electrical system (vertical PDUs have an earthing bolt for the earth connection).

REACH safety instructions in accordance with regulation (EU) no. 1907/2006:

- The product contains the following SVHC substances:
  - Lead – CAS no. 7439-92-1
  - Lead(II) oxide – CAS no. 1317-36-8
  - Diboron trioxide – CAS no. 1303-86-2
  - Lead titanium trioxide – CAS no. 12060-00-3
- According to the manufacturer, there are no health risks during use provided the product is handled properly.
- After use, the product must be disposed of properly in accordance with the applicable legal regulations.

For the RCM Inline Meter, the following also applies:

- The RCM is not a replacement for a residual current circuit-breaker.

Note:
Further safety instructions in all EU languages can be found on page 2 to 3.

2.2 Operating and technical staff

- The assembly, installation, commissioning, maintenance and repair of this unit must only be performed by qualified mechanics and electricians.
- Only properly instructed personnel may work on a unit while in operation.

2.3 IT safety instructions

To ensure the availability, confidentiality and integrity of data, products, networks and systems must be protected against unauthorised access. Such protection can be achieved only with organisational and technical measures.

To satisfy the increased safety requirements, Rittal recommends the observance of the following measures. Furthermore, more detailed information can be found on the websites of Bundesamt für Sicherheit in der Informationstechnik (Federal Office for IT Security – BSI) (status 27.10.2020):

- bsi.bund.de/DE/Themen/ITGrundschutz/ITGrundschutzKompendium/itgrundschutzKompendium_node.html
- bsi.bund.de/DE/Themen/ICS/Empfehlungen/ICS/empfehlungen_node.html

2.3.1 Measures for products and systems

Embed products and systems not in public networks.

- Do not operate the system directly in the Internet, but only in internal networks protected externally with firewalls.
- If your products and systems must be embedded via a public network, deploy a VPN (Virtual Private Network).

Observe the field of application

Observe the IT security requirements and the applicable standards for its field of application. Adopt necessary security measures, e.g.:

- To protect your networks, and the embedded products and systems against external effects, configure a firewall.
- Also deploy a firewall for segmentation of a network or to isolate a controller.
- For security-critical applications (KRITIS), deploy the device only with an additional security appliance.

Disable unused channels
By default, the following protocols are deactivated for security reasons:
– Telnet, FTP, SNMPv1, SNMPv2, HTTP
– Disable superfluous communications channels for your deployed products.
– Use only secure encrypted protocols and disable insecure protocols.

Consider defence-in-depth mechanisms during the planning phase
– Consider defence-in-depth mechanisms for your system planning.
– Defence-in-depth mechanisms cover several levels of mutually coordinated security measures.

Restrict access authorisations
– Restrict access authorisations to networks and systems to only persons that need an authorisation.
– Disable unused user accounts.

Protect accesses
– Do not use the default passwords; instead, use secure, long passwords containing numbers, a mix of upper case and lower case letters, symbols and no repetitions. For SNMP, overwrite the default community strings "public".
– Create random passwords with a password manager.
– If possible, deploy central user management systems for user management and login information.

Remote accesses
– When remote accesses are deployed, select a secure access path, such as VPN (Virtual Private Network) or HTTPS.

Security-relevant event logging
– Enable the security-relevant event logging in accordance with the security policies and the statutory regulations for data protection.

Deploy the current firmware version
– Ensure that the current Rittal firmware is deployed on all devices.
– The firmware can be downloaded from the associated product pages in the Internet.
– Observe the associated Release Notes for new firmware versions.

Deploy current security software
– To identify and eliminate security threats, such as viruses, trojans and other malicious software, security software should be installed on all PCs and kept up-to-date.
– Deploy whitelist tools to monitor the device context.
– Deploy an intrusion-detection system to validate the communication of your system.

Perform regular threat analyses
– Rittal recommends that you perform regular threat analyses.
– The threat analyses allow you to determine whether your adopted measures are effective.

Protect external storage media against access
– External storage media (such as SD cards and USB sticks) must be protected against physical access. Ensure that no unauthorised persons have access to the SD cards or the USB stick.
– Sensitive data can be read for an unauthorised access to SD cards or USB sticks.

2.3.2 Further guidelines for cyber security and system hardening

For further cyber security-related configurations as well as recommendations on secure system hardening, refer to the System Hardening Guide for the PDU.
These guidelines contain detailed measures for reducing the attack surfaces, securing communication interfaces as well as ensuring the secure configuration of the system in productive operation.
The settings and best practices described in the System Hardening Guide should be considered and implemented, in particular, before commissioning and in the context of security-critical applications.

EN

3 Product description

3.1 Functional description

The PDU is a power distribution unit for use in IT racks. There are four design variants, with the following distinguishing features:

- PDU metered: Energy measurement at the infeed of each phase, i.e. output requirement of an entire IT rack; no switching function; with display and network interface.
- PDU metered plus: Energy measurement at each individual outlet socket; no switching function; with display and network interface.
- PDU switched: Energy measurement at the infeed of each phase, i.e. output requirement of an entire IT rack; with switching function per individual output slot; with display and network interface.
- PDU managed: Energy measurement and switching function for each individual output slot; with display and network interface.

The RCM Inline Meter is a differential-current measurement for deployment in IT racks. The differential current is measured at the power supply, i.e. for a complete IT rack. Further functions are:

- Energy measurement at the power supply for each phase, i.e. output requirement of a complete IT rack; no switching function; with display and network interface.

3.2 Intended use, foreseeable misuse

The PDU is used for distributing power in IT racks.
The RCM Inline Meter measures the differential current and so monitors the electrically-earthed power supplies in IT racks; it is envisaged for permanent installation in IT racks.
Both devices must not be used at locations where children may be present and are envisaged for use only in a restricted access area (e.g. lockable rack).

The units are state of the art and built according to recognised safety regulations. Nevertheless, improper use can pose a threat to the life and limb of the user or third parties, or result in possible damage to the system and other property.

Consequently, the units must only be used properly and in a technically sound condition! Any malfunctions which impair safety should be rectified immediately. Follow the operating instructions!

Proper use also includes the observance of the documentation provided, and compliance with the inspection and maintenance conditions.

Rittal GmbH & Co. KG is not liable for any damage which may result from failure to comply with the documentation provided. The same applies to failure to comply with the valid documentation for any accessories used.

Inappropriate use may be dangerous. Examples of inappropriate use include:

- Use of impermissible tools.
- Improper operation.
- Improper rectification of malfunctions.
- Use of accessories not approved by Rittal GmbH & Co. KG.

3.3 Supply includes

The scope of the PDU supply is shown in the following illustrations.

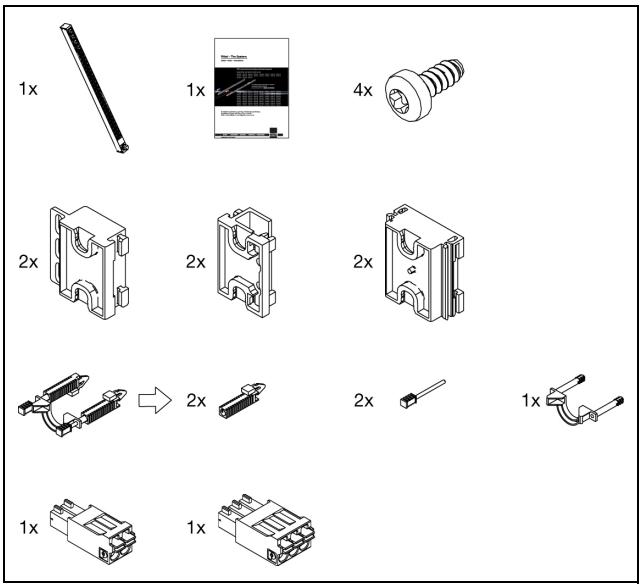

Fig. 1: Scope of supply PDU metered / metered plus / switched / managed

The scope of supply for the RCM and the 19" PDU is shown in the following figure.

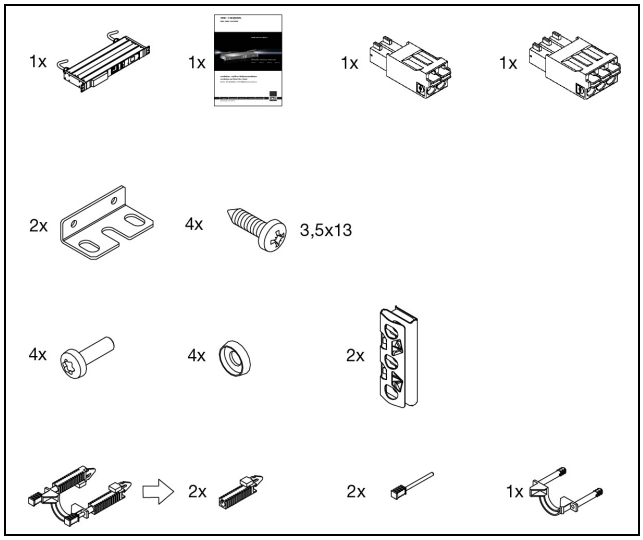

Fig. 2: Scope of supply RCM and 19" PDU

EN

4 Transport and handling

4.1 Transport

The unit is delivered in a cardboard box.

- Transport the unit to its destination only in its original packaging.
- Observe the humidity and temperature range details for transport (see section 13 "Technical specifications").

4.2 Storage

The storage location must fulfil the storage conditions (see section 13 "Technical specifications").

4.3 Unpacking

- Remove the packaging materials from the unit.

Note:
After unpacking, the packaging materials must be disposed of in an environmentally friendly way. They consist of the following materials:
Polyethylene film (PE film), cardboard.

- Check the unit for any damage that may have occurred during transport.

Note:
Damage and other faults, e.g. incomplete delivery, should be reported immediately, in writing, to the shipping company and to Rittal GmbH & Co. KG.

- Take the unit out of the packaging.
- Remove all protective film from the unit.

EN

5 Installation

5.1 Safety instructions

- Please observe the valid regulations for electrical installation in the country in which the PDU or the RCM differential-current measurement is installed and operated, and the national regulations for accident prevention. Please also observe any internal company regulations, such as work, operating and safety regulations.
- The technical specifications and limit values stated must not be exceeded under any circumstances. In particular, this applies to the specified ambient temperature range and IP protection category.
- If a higher IP protection category is required for a special application, the PDU must be installed in an appropriate housing or in an appropriate enclosure with the required IP protection category.

5.2 Siting location requirements

To ensure correct functioning of the unit, the conditions for the installation site of the unit specified in section 13 "Technical specifications" must be observed.

Electromagnetic interference

– Interfering electrical installations (high frequency) are to be avoided.

5.3 Assembly procedure

Note:
Ensure good access to the front of the unit so that the display is easy to read.

The PDU is assembled using the brackets supplied loose as accessories. As a general rule, assembly may be carried out either from the front or back, or from the left or right of the IT rack.

Note:
Rittal recommends always attaching the brackets to the PDU first, and then securing the assembled unit to the inside of the enclosure. This means that the distances between the brackets and hence the mounting points inside the enclosure are pre-defined, allowing you to promptly identify any potential collisions of the PDU inside the enclosure.

5.3.1 Installation with the VX IT/TS IT bracket

- First, attach the VX IT/TS IT bracket to the top and bottom at the rear of the PDU.

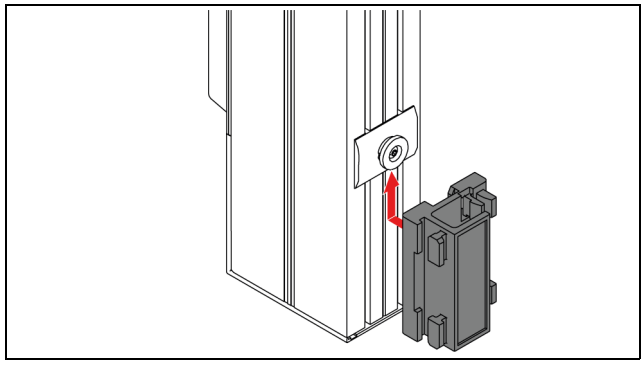

Fig. 3: Attach the VX IT/TS IT bracket to the PDU

- Insert the complete PDU with the brackets at the required mounting position on the VX IT/TS IT mounting angle.

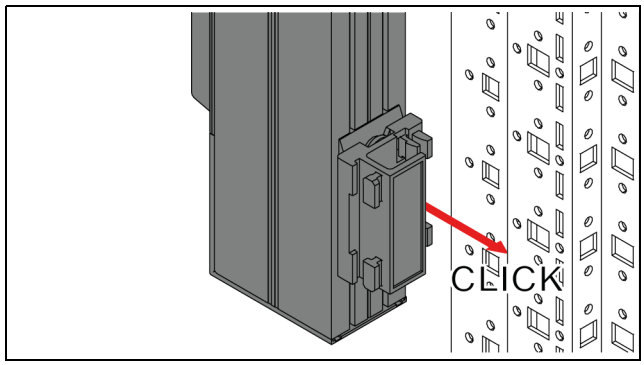

Fig. 4: Mount the PDU on the VX IT/TS IT mounting angle

- If necessary, screw-fasten the brackets for transport.

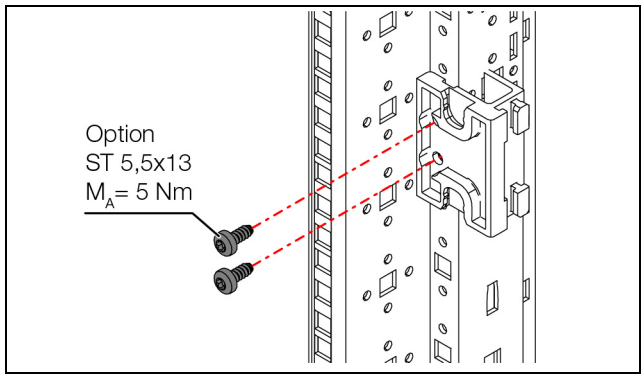

Fig. 5: A screw connection of the holders is recommended for transport

- If necessary, insert the extension on the bracket from above if you want to mount a second PDU on the same bracket in parallel.

EN

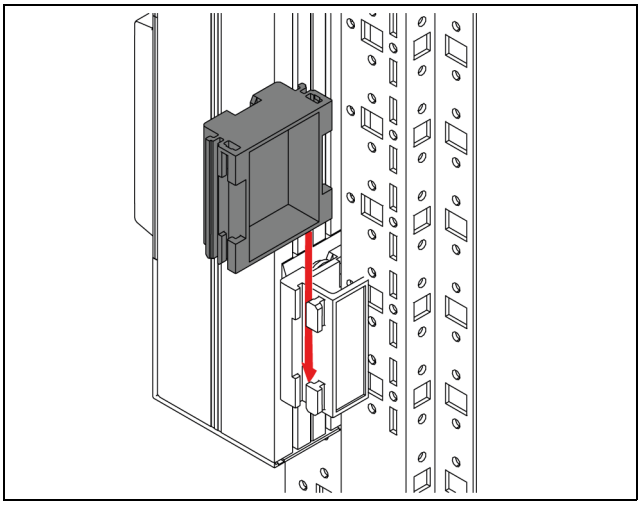

Fig. 6: Fit the extension to the VX IT/TS IT bracket

- Locate the second PDU into the extension from above, parallel to the first PDU.

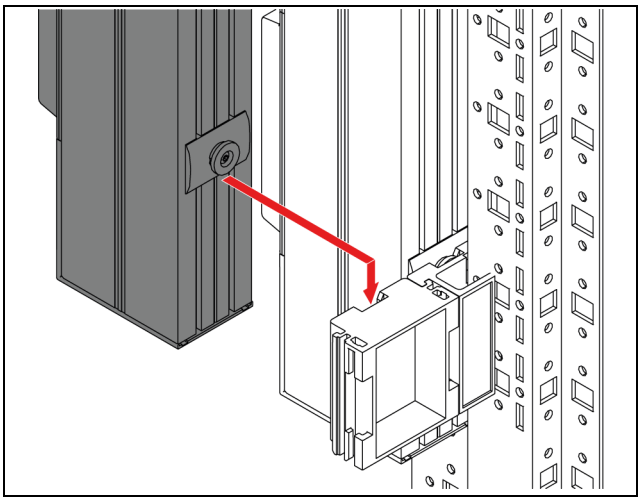

Fig. 7: Fit the second PDU in the extension

5.3.2 Mounting with the universal bracket on the VX IT enclosure frame

The universal bracket allows the PDU to be mounted on a VX IT enclosure frame or on the vertical system chassis.

- Screw-fasten the two universal brackets with the required separation on the VX IT enclosure frame.

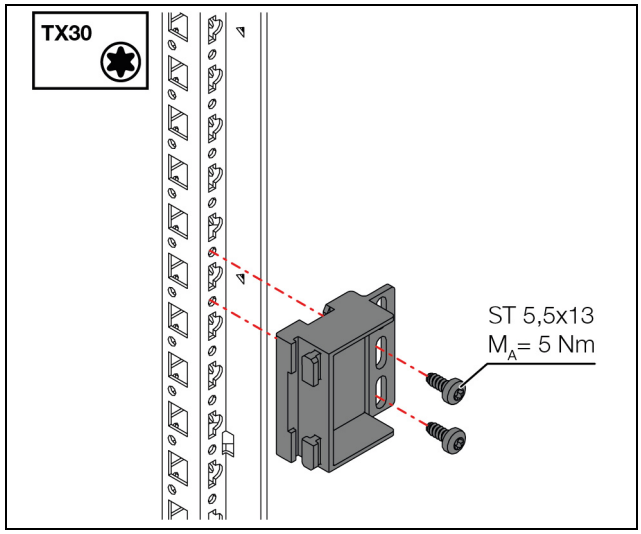

Fig. 8: Mounting the universal bracket on the VX IT enclosure frame

- Insert the PDU from above in the mounted universal bracket.

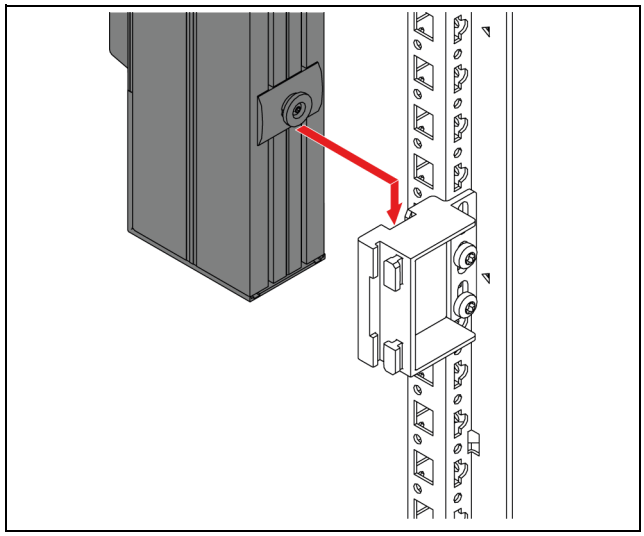

Fig. 9: Mounting the PDU on the VX IT enclosure frame

5.3.3 Mounting the PDU on the cable tray

The PDU can be mounted directly on a cable tray.

- Feed the pre-assembled brackets of the PDU through the large holes in the cable tray and then push the PDU downwards.

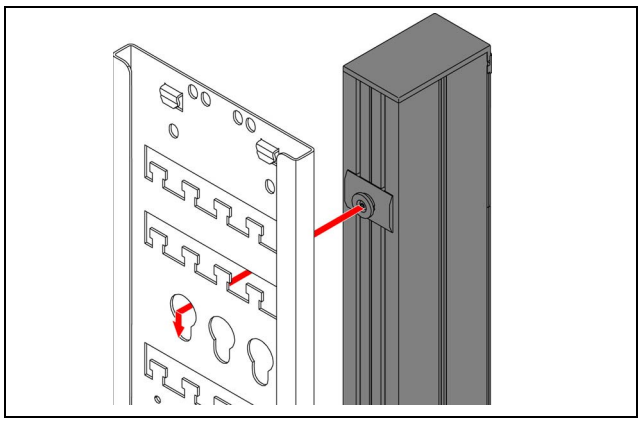

Fig. 10: Mounting the PDU on a cable tray

Mounting of several PDUs on a cable tray

The separation of the holes in the cable tray is dimensioned so that several PDUs can be mounted next to each other in the same manner.

5.3.4 Mounting the RCM and the 19" PDU in the 19" level

The RCM Inline Meter is designed for mounting within the 19" level. The required assembly components for simple mounting are supplied.

- First mount the required captive nuts on the VX IT / TS IT rack.

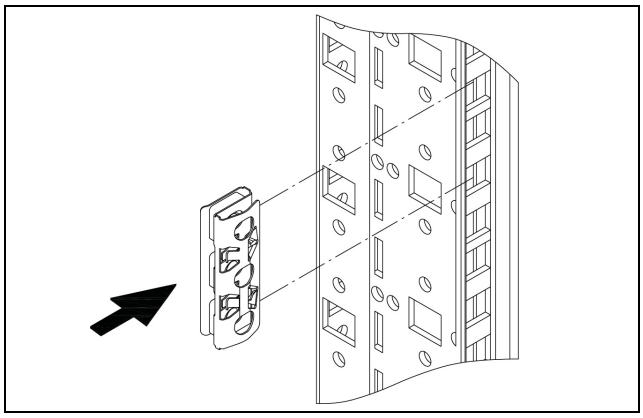

Fig. 11: Mounting captive nuts

- Mount the fastening brackets on both sides of the RCM Inline Meter.

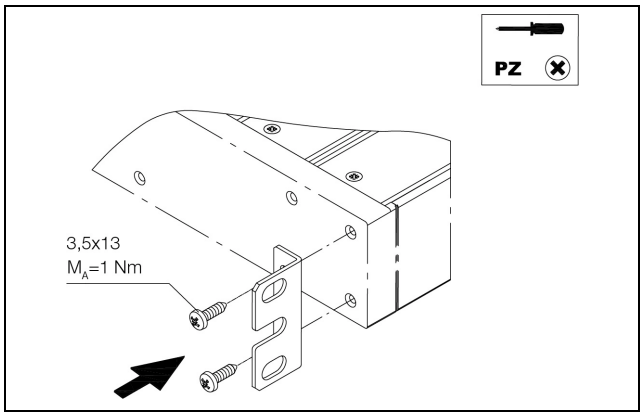

Fig. 12: Mounting the fastening brackets on the RCM Inline Meter

- Mount the RCM Inline Meter on the fastening brackets with the supplied screws in the previously installed captive nuts.

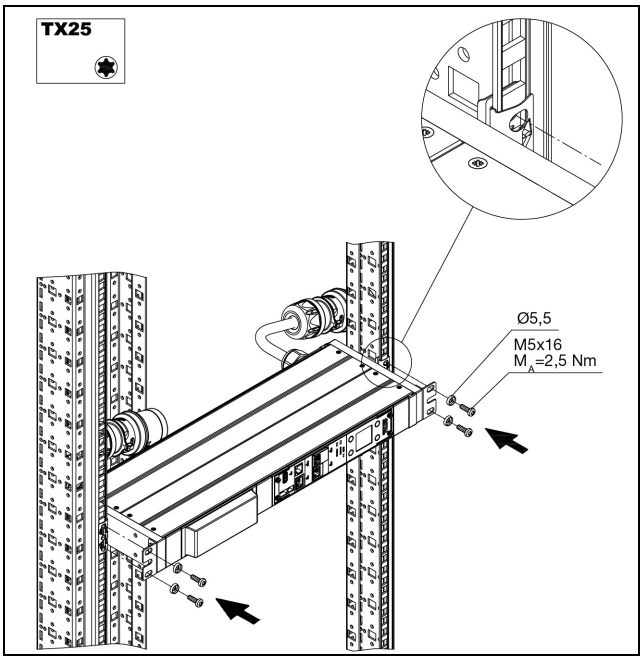

Fig. 13: Mounting the RCM Inline Meter in the 19" level

5.4 Electrical connection of the PDU

5.4.1 Requirements concerning the electrical connection

- The electrical connection can only be made on a TN-S or TT network. Please note the detailed information in section 13 "Technical specifications".
- Depending on the PDU version, provide the following pre-fuse:
  - PDU: 3 x 16 A (3~/16 A versions), 3 x 32 A (3~/32 A versions), 1 x 16 A (1~/16 A versions) or 1 x 32 A (1~/32 A versions)
- Optional: Rittal recommends that the housing earthing point of the PDU has a conductive connection with the enclosure frame (for vertical PDU).

Fig. 14: Housing earthing point of the PDU

EN

5.4.2 Connecting to the mains supply

The PDU is connected to the mains supply using the permanently attached connection cable.

- Route the PDU connection cable out of the IT rack and connect it to the mains supply.

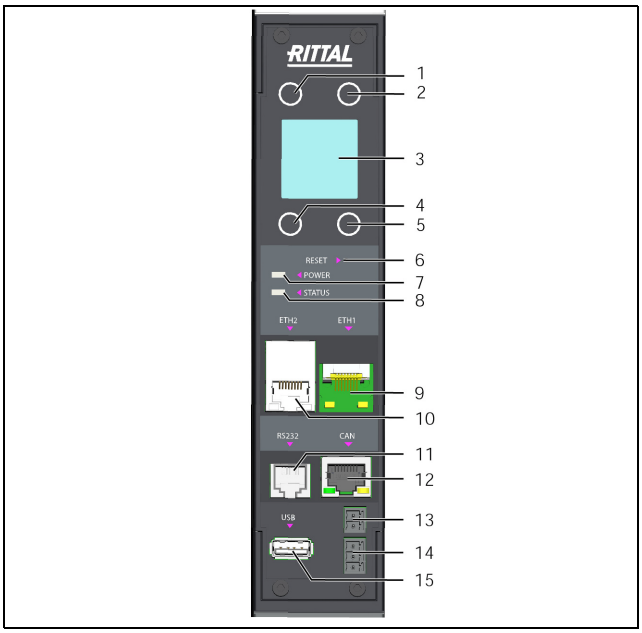

Fig. 15: Control and display elements and connections of the PDU metered/metered plus/switched/managed/RCM

Key

1 "Esc" key
2 "Up", and "+" key when entering the pin
3 Display
4 "Enter" key
5 "Down", "Next" key and "–" key when entering the pin
6 Reset button to restart the PDU
7 Green LED to indicate the power supply
8 Multi-LED for status display
9 Ethernet interface 1 RJ 45
10 Ethernet interface 2 RJ 45
11 RS232 serial interface
12 CAN bus connection (daisy chain) for CMC III sensors, 24 V ⎓,1 A
13 Digital input
14 Alarm relay output
15 USB connection for firmware updates and for data logging

After connecting the PDU to the power supply, the green power LED (fig. 15, item 7) will be illuminated, and the PDU will start to boot automatically.

If connected to a network, the Link and Status LEDs on the RJ 45 jack will be illuminated (fig. 15, item 9 and item 10).

After a few seconds, the multi-LED for status display will start to flash blue, indicating that booting is in progress (fig. 15, item 8).

For PDU metered, metered plus, switched and PDU managed: Once booting is complete, the LEDs will indicate the current switching status of the relays (slot "on": LED shows green). There is **no** switching operation of the relays whilst booting is in progress; in its delivered state, all PDU slots are activated.

During the initial commissioning, in individual situations it is possible that although a relay is physically switched off, it is displayed as "On". In such a case, the relay must be switched on and off once (only for PDU managed and switched).

Note:
Booting is complete after around 2 minutes. Only then will the display appear, and the PDU can be operated and configured using the keys (see section 6.2 "Control and display elements"). Network access to the PDU is likewise only possible once booting is complete.

5.4.3 Connecting equipment

- Connect a connection cable from the Rittal accessories to a free slot on the PDU and the equipment.

Note:
When connecting equipment, please note the maximum load per PDU slot (C13: 10 A, C19: 16 A, C13/C19: 16 A, CEE 7/3: 16 A, UK BS 1363: 13 A).

- Secure the connection cable with a suitable cable attachment if necessary. To do so, first attach one bracket of the cable attachment into the PDU on both the left and right.
- Push the cable attachment retainer on the right side inclined from below to the limit stop in the opening and then align it vertically.

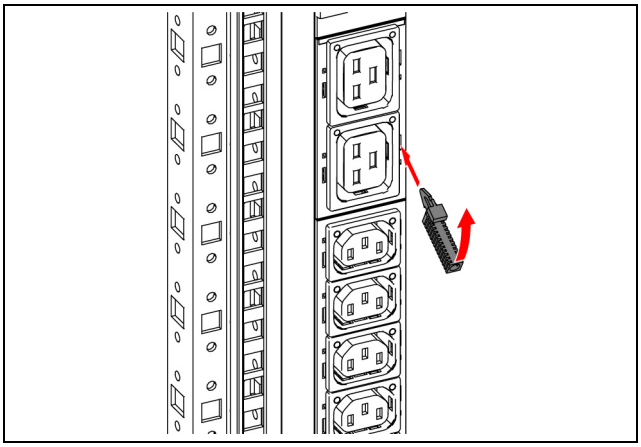

Fig. 16: Inserting the right-hand retainer

- Push the cable attachment retainer on the left side inclined from above to the limit stop in the opening and likewise align it vertically.

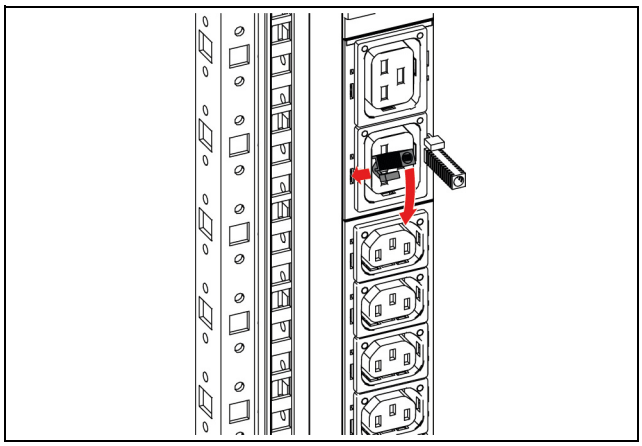

Fig. 17: Inserting the left-hand retainer

■ Connect the required connector.

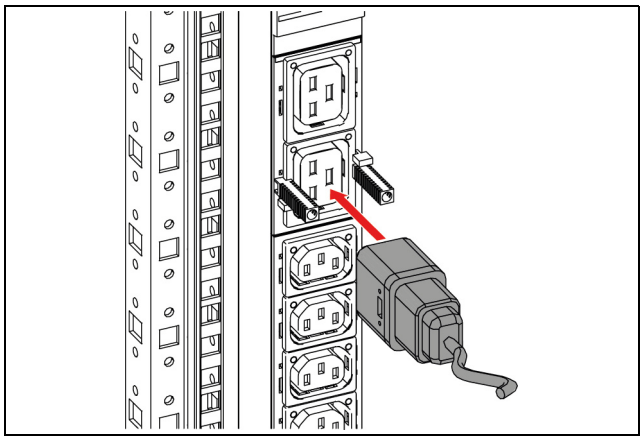

Fig. 18: Connecting a connector

■ Push the actual cable attachment in the retainers.

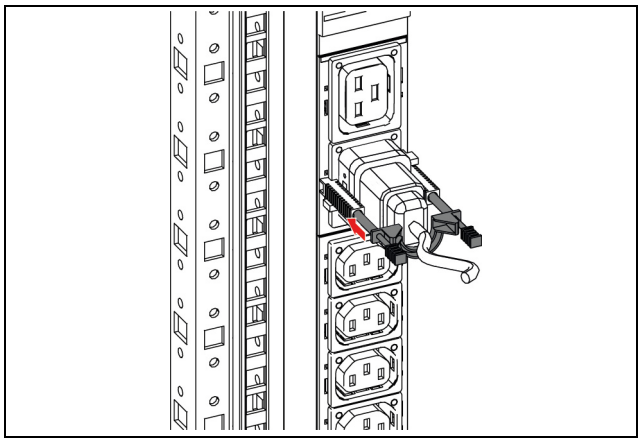

Fig. 19: Inserting the cable attachment

■ Secure the cable attachment by pressing the locking pins into the retainers.

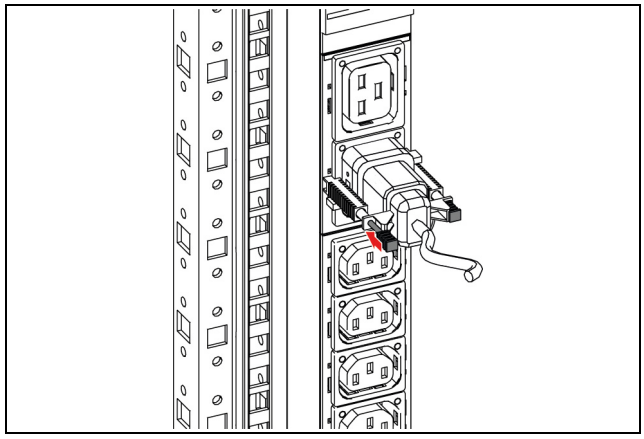

Fig. 20: Securing the cable attachment

5.4.4 Further configuration

The subsequent commissioning, configuration and operation of the PDU metered/metered plus/switched/managed is described in the following sections.

– Section 6 "Commissioning the PDU"
– Section 7 "Configuring the PDU"
– Section 8 "PDU master/slave mode"
– Section 9 "Operating the PDU"

The following sections 10 to 16 apply to all PDU variants.

EN

6 Commissioning the PDU

6.1 Switching on the PDU

Once the electrical connection has been established, the PDU will start automatically (see section 5.4 "Electrical connection of the PDU"). Separate activation is not required.

6.2 Control and display elements

The control and display elements are shown in fig. 21. The display direction and the assignment of the four keys at the side of the display will depend on the installation direction of the PDU. The keys are assigned depending on the position of the PDU/RCM.The assignment changes automatically when the PDU/RCM is rotated. The legend for fig. 21 shows the key assignment appropriate for the figure. The actual assignment of the keys is shown correctly on the display.

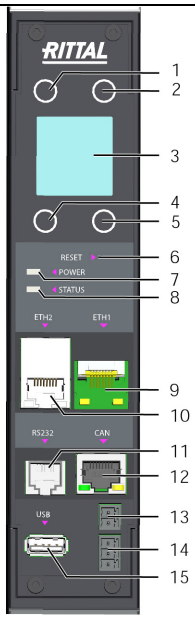

Fig. 21: Control and display elements and connections of the PDU metered/metered plus/switched/managed/RCM

Key

1 "Esc" key
2 "Up", and "+" key when entering the pin
3 Display
4 "Enter" key
5 "Down", "Next" key and "–" key when entering the pin
6 Reset button to restart the PDU
7 Green LED to indicate the power supply
8 Multi-LED for status display
9 Ethernet interface 1 RJ 45
10 Ethernet interface 2 RJ 45
11 RS232 serial interface
12 CAN bus connection (daisy chain) for CMC III sensors, 24 V ⎓,1 A
13 Digital input
14 Alarm relay output
15 USB connection for firmware updates and for data logging

6.3 LED displays

A multi-LED for status display is integrated into the front of the PDU (fig. 21, item 8). Further LEDs are also located on the CAN bus connection (fig. 21, item 12) and on the Ethernet interfaces (fig. 21, item 9 and item 10).

6.3.1 Multi-LED displays

Continuous illumination of the multi-LED indicates the status of the PDU and of the connected components.

Colour	Status
Green	The PDU and all devices connected to the CAN bus have the status "OK".
Orange	The PDU or at least one device connected to the CAN bus has the status "Warning".
Red	The PDU or at least one device connected to the CAN bus has the status "Alarm".

Tab. 1: Multi-LED continuous light

The flashing code of the multi-LED indicates a status change in the PDU:

Colour	Status
Cyclically green – orange – red	At least one new device was detected on the CAN bus ("Detected" status).
Alternating red – blue	At least one device has been removed from the CAN bus or can no longer be detected via the CAN bus ("Lost" status).
Blue	The position of at least one device on the CAN bus has been altered (status "Changed").
Red	Update task in progress (so-called heartbeat, alternating long and short).
White	Update of one or more sensors or PDU modules in progress.

Tab. 2: Multi-LED flashing codes

6.3.2 LED displays on the CAN bus connection

A red and a green LED are located on the CAN bus connection. They display the status of the CAN bus.

Colour	Status
Green (continuous light)	Communication via the CAN bus possible.
Red (flashing)	Transmission error.

Tab. 3: LEDs on the CAN bus connection

6.3.3 LED displays on the Ethernet interfaces

There is a green and an orange LED on each Ethernet interface. They display the status of the network connection.

Colour	Status
Green (continuous light)	Communication via the Ethernet interface possible.
Orange (flashing)	Data communication interval via the network.

Tab. 4: LEDs on the Ethernet interface

6.4 Acknowledging messages

Generally speaking, messages can be acknowledged in two ways:

1. By right-clicking a message in the message display and left-clicking on the "Acknowledge Alarm" or "Acknowledge Devices" entry in the context menu.
   If an alarm message has been selected, "Acknowledge Alarm" only confirms the currently selected message.
   If a message concerning a configuration change has been selected, "Acknowledge Devices" confirms all related messages jointly.
2. By right-clicking on a component entry in the Configuration area and left-clicking on the "Acknowledge Alarms" or "Acknowledge All Devices" entry in the context menu.
   This will confirm active alarm messages for that particular component or all configuration changes.

Messages that are displayed when connecting additional sensors can also be acknowledged directly on the PDU by confirming the "Acknowledge All Devices" message in the **Sensors** submenu.

EN

7 Configuring the PDU

Basic configuration of the PDU, especially the (one-off) customisation of the network settings, can be performed in several ways:

1. Display and control components directly on the PDU
2. HTTP connection via the Ethernet interface

Settings are usually made via an HTTP connection. For this purpose, the IP address of the PDU must be known. If this address is not known, the device may be accessed directly using the display and the control components directly on the PDU.

- The following descriptions assume that the PDU is in its delivered state, i.e. no changes have been made to the basic configuration. In particular, the connection type "HTTP" must not be blocked.

7.1 Operating using the control components on the front

The following descriptions apply to access via the control components and display directly on the PDU. Access via the PDU website is described in section 9 "Operating the PDU".

7.1.1 Menu structure

Basic PDU settings can be made using the control components and the display based on the following menu structure, here an example of a 3-phase PDU:

Rittal Menu		
	Data	
		P1
		P2
		P3
		Total
		Sensor/Slave
	Alarms	
	Setup	
		IP Configuration
		Sensors
		Display
		Controller Infopage
		PDU Infopage
		PDU Mode
		PDU Pairing

The following main menu appears in the display:

Fig. 22: Rittal main menu

The **Data** menu gives you access to the individual values for phase L1 (**P1** menu) of a power supply as well as similarly for phases L2 (**P2** menu) and L3 (**P3** menu) for variants with 3-phase power supply. You can view pending warning messages and alarm messages in the **Alarms** menu.

Finally, the basic settings of the PDU can be specified in the **Setup** menu.

You can also use the PDU website to access most of the parameters that can be accessed via the control components directly on the PDU. Corresponding descriptions may be found in section 9 "Operating the PDU". Only the few settings that are not available via the website are described in section 7.1.5 "Special settings and remarks".

7.1.2 Navigating through the menu structure

The individual menu points are selected using the "Down" (fig. 21, item 5) and "Up" arrows (fig. 21, item 2). You can switch between the individual menu levels with the "Esc" (fig. 21, item 1) and "Enter" keys (fig. 21, item 4).

Note:
Depending on the set network configuration, an additional **IP2 Configuration** submenu may be present.

Starting at the **Setup** menu, for example, you can select the following seven sub-menus:

– **IP Configuration** sub-menu
– **Sensors** sub-menu
– **Display** sub-menu
– **Controller Infopage** sub-menu
– **PDU Infopage** sub-menu
– **PDU Mode** sub-menu
– **PDU Pairing** sub-menu

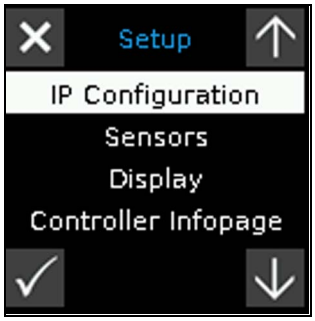

Fig. 23: Menu Setup - page 1

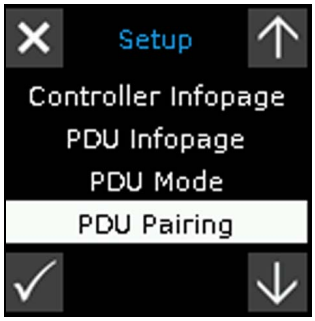

Fig. 24: Menu Setup - page 2

From the **IP Configuration** menu, you can switch back to the **Rittal** main menu by pressing the "Esc" key twice.

7.1.3 Entering the PIN

A PIN must be entered in order to access the sub-menus of the **Setup** menu. The prompt "Please Enter PIN" will appear automatically when one of the sub-menus is selected.

The following menu appears in the display, for example, when selecting the **IP Configuration** submenu:

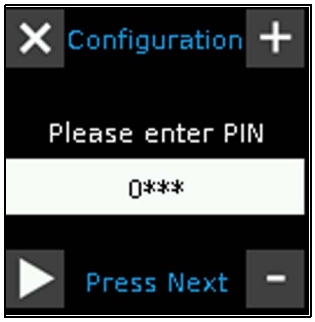

Fig. 25: PIN input page

- Keep pressing the "Up" arrow (fig. 21, item 2) or the "Down" arrow (fig. 21, item 5) until the required digit is displayed in the first position of the PIN.
- Press the "Enter" key (fig. 21, item 4) to move to the second position of the PIN.
- Once again, keep pressing the "Up" arrow or the "Down" arrow until the required digit is displayed in the second position of the PIN.
- Move to the third and fourth positions of the PIN and set them in the same way.

Note:
"1221" is the preset PIN for accessing the configuration menu. This PIN can be modified via the PDU website.
- Make a note of the new PIN number and keep it somewhere safe.

- Finally, press the "Enter" key (fig. 21, item 4).
  The previously selected sub-menu will appear.

Note:
The PIN entry will not be saved. This means that the PIN must be entered every time a sub-menu is activated.

7.1.4 Entering values

The stored parameter values are generally displayed below the respective line with the name of the parameter. To change a value, in the same way used for navigating through the menu structure, select the appropriate parameter using the "Down" and "Up" arrows. To accept a changed value, you must always press the "Enter" key.

Example: Changing the network settings for IPv4

If the display has become dark: Press any key. A menu that displays the power for each phase appears. Fig. 26 shows the screen for a single-phase PDU.

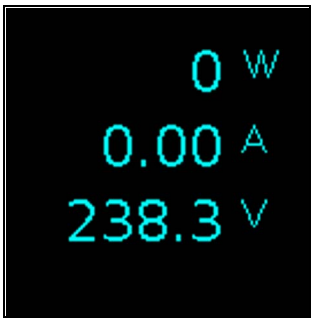

Fig. 26: Start menu

Press the "Esc" key (fig. 21, item 1) to display the **Rittal** main menu.

Fig. 27: Rittal main menu

- Use the "Down" or "Up" arrows to select the "Setup" entry.
- Confirm your selection with "Enter". The **Setup** menu will appear.

EN

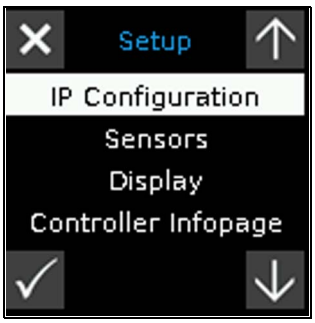

Fig. 28: Setup menu- page 1

- Use the "Down" or "Up" arrows to select the "IP Configuration" entry.
- Confirm your selection with "Enter". The menu for entering your security PIN will appear.

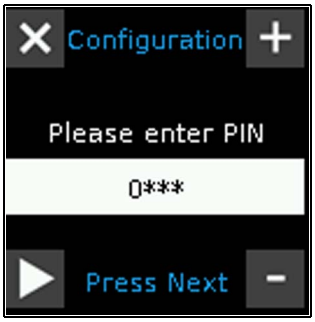

Fig. 29: PIN input page

- Enter the PIN to access the sub-menu (see section 7.1.3 "Entering the PIN").

The **DHCP** menu will appear. The "✓*" symbol marks the current DHCP setting.

Fig. 30: DHCP menu

- Press the "Down" arrow or the "Up" arrow to select the DHCP setting "OFF", and press the "Enter" key to confirm the selection.
  The first page of the **IPv4 Setup** menu for setting the IP address appears.

Fig. 31: IPv4 Setup menu - page 1

- In the same way as you entered the PIN, enter an IPv4 address for the "Set IP Address" entry permitted in the network and confirm with the "Enter" key.
- On pages 2 and 3 of the **IPv4 Setup** submenu, correct the settings for the subnet mask and gateway, if necessary.
  Finally, a page will appear showing all the settings collectively.

7.1.5 Special settings and remarks

The following settings in the **Display** sub-menu are not available on the website but only via the control components and the display directly on the PDU. The following display appears when selecting the **Display** submenu:

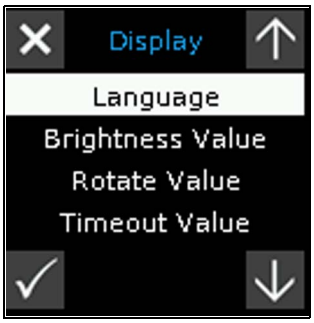

Fig. 32: Display menu

Parameter	Explanation
Language	Change the display language between English, German and French.
Brightness Value	Set the reduced brightness for the display in a range between "0%" and "100%".
Rotate	In the default setting "Auto", the display direction and key assignment will change depending on the direction in which the PDU is installed. The display direction and key assignment may be predefined regardless of the installation direction using the values "0", "90", "180" and "270".
Timeout Values	Duration in seconds after which the brightness of the display is reduced (to the value set at "Brightness Value"). The brightness switches back to 100% when any key is pressed.

Tab. 5: Special settings

Also, if required, the product information (serial number, etc.) on the display of the PDU can be fetched via a QR code. To do this:

- If the display is switched off: Press any key. A menu that displays the power for each phase appears.
- Press the "Esc" key to display the **Rittal** main menu.
- Keep the "Esc" key pressed for 3 seconds.
  The QR code is displayed until the display timeout is reached or any key is pressed.

7.2 HTTP connection

7.2.1 Establishing the network connection

As standard, automatic IP assignment is activated for the PDU ("DHCPv4" setting is activated). If no DHCP server is available on the network from which the PDU receives an address, a link-local address from the 169.254.0.0/16 range is assigned. Such an assigned IP address permits a one-to-one connection without the network configuration needing to be adapted.

- Navigate as described at 7.1 via the PDU control components on the front via the Setup menu item to the "Controller Infopage" submenu and select it. Among other things, the automatically assigned IP address is now also displayed.

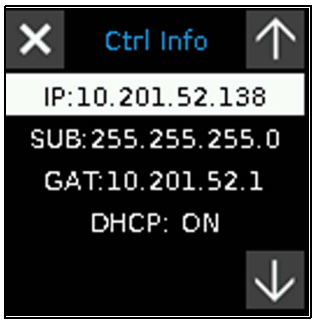

Fig. 33: Controller Infopage menu

Further ways of finding the IP address are described below.

- First of all, establish a connection to the network via the Ethernet interface of the PDU.
- Execute the following command in the Windows command prompt (this requires a direct network connection to the PDU):
  ping pdu-XXXXXXXX
  "XXXXXXXX" must be replaced with the last eight digits of the IoT Interface MAC address. This address is printed on the side of the PDU.
- Alternatively, enter the following address in the browser (this also requires a direct network connection to the PDU):
  pdu-XXXXXXXX
  "XXXXXXXX" must be replaced with the last eight digits of the IoT Interface MAC address. This address is printed on the side of the PDU.
  You are now on the WEB UI and can view the IP address on the **Configuration** tab after clicking the **TCP/IP** button.

7.2.2 Access to PDU interface website

- Enter in the browser the PDU network address determined previously. In the example, http://10.201.52.138 (see fig. 34, item 1). The login dialogue for login on the device is displayed.

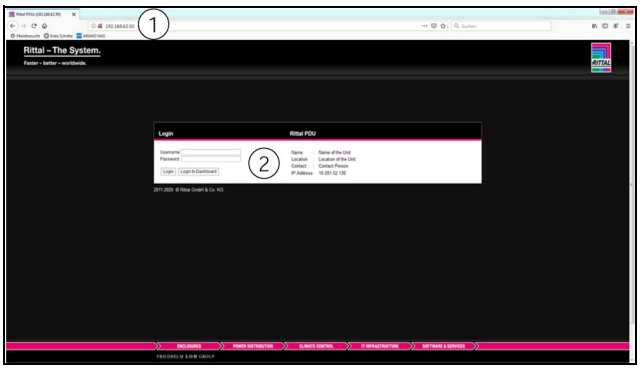

Fig. 34: Login dialogue for login on the device

- If necessary, disable the proxy server in the browser to enable a direct connection to the device.
- Log in with the username **admin** and the password **admin** (fig. 34, item 2).
- Click the Login button to display the website of the device.

In the next step, you must change the password after the first login on the device (see section 7.2.3 "Changing the password after the first login").

Note:
Alternatively, you can also login to a dashboard directly from the login screen by clicking the **Login to Dashboard** button (see section 9.13.4 "Calling a dashboard").

7.2.3 Changing the password after the first login

The PDU is supplied with the simple standard password "admin" for the first login. For security reasons, a new strong password must be specified directly after the first login.

For this purpose, the following dialogue is displayed.

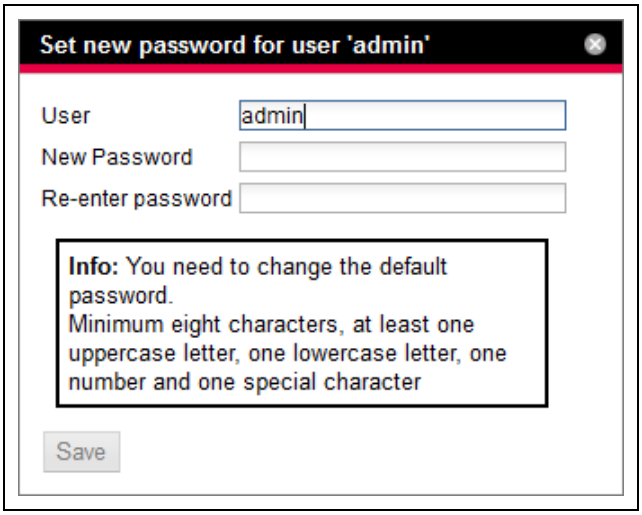

Fig. 35: Changing the password

- Enter the new password in the "New Password" line. Whereby, observe the notes for creating a secure password.
- Re-enter the appropriate password in the "Re-enter Password" line.

EN

An appropriate note appears if the new password is too similar to the previous password. In this case, select another password.

- Confirm your entries by clicking **Save**.
  The dialogue is closed when the password conforms to the required rules.

Use the new password for the next login.

7.2.4 Changing the network settings

Note:
The network settings need to be changed only when the PDU is integrated into the network structure without DHCP or the configuration of the two network interfaces is adapted.

The network settings can be adapted appropriately to integrate the PDU into the existing network structure.

- In the left-hand section of the overview window (navigation area), click the **Processing Unit** entry (fig. 36, item 3), and in the right-hand section (configuration area), click the **Configuration** tab (fig. 36, item 4).

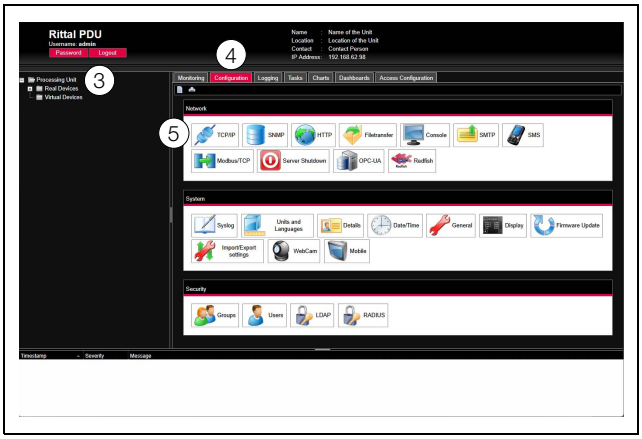

Fig. 36: Customise the TCP/IP settings

- Click the **TCP/IP** button in the **Network** group box (fig. 36, item 5).

The **Network Configuration** window with the **General** tab appears in the foreground.

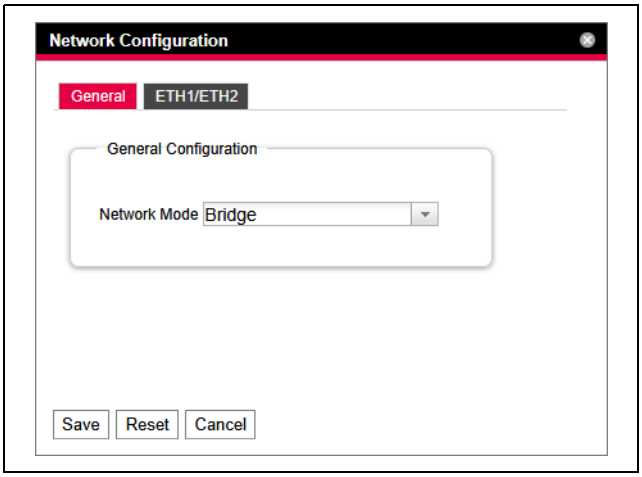

Fig. 37: Adapting the network mode

- Select in the "Network Mode" dropdown list the required network mode for the network interfaces.

The following settings are available for selection:

- Bridge: The two network interfaces are combined and can be accessed via the same IP address.
- Separated: The two network interfaces are configured separately (e.g. to allow access to the device from two separate network segments).
- Eth 1 only: Only interface ETH 1 is activated and can be configured.
- Eth 2 only: Only interface ETH 2 is activated and can be configured.

- For changes to the network mode: Finally, start by saving the network mode setting.
  Otherwise, a prompt appears initially when switching to a different tab.
- Depending on the selected network mode, click the **ETH1/ETH2**, **ETH1** or **ETH2** tab.

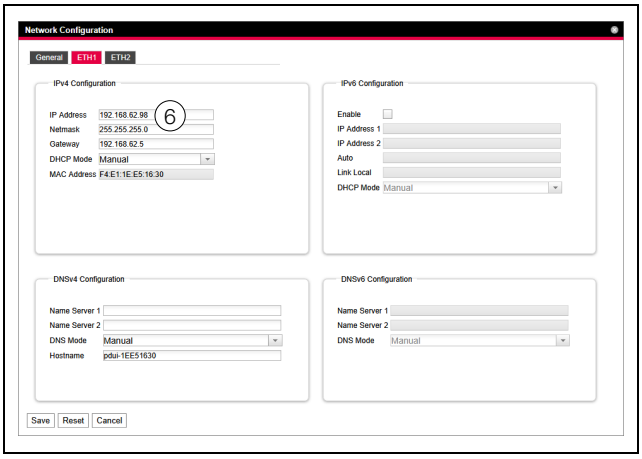

Fig. 38: Customise the TCP/IP settings

Note:
The following sections describe in detail how to make the setting for the IPv4 protocol. Further information regarding the TCP/IP configuration may be found in section 9.5.1 "TCP/IP configuration".

- In the **TCP/IP Configuration** window, change the device's IP address in the **IPv4 Configuration** group box to an address permitted in the network (fig. 38, item 6).
- If necessary, correct the settings for the subnet mask and the gateway.
- Alternatively, select the "DHCPv4" setting instead of "Manual" for automatic IP allocation.
  To this end, there must be a DHCP server available in the network to administer and assign the addresses.
- Click on **Save** to save your settings.

Note:
If the **Save** button cannot be clicked, an incorrect input has been made (see section 9.2.5 "Other displays"). In this case, check your entries and correct as necessary.

- Change the network settings of your computer to the original values of the IP address and the subnet mask.
- Disconnect the network cable from your computer.
- Connect the PDU to your Ethernet LAN with a network cable (fig. 21, item 5).

Note:
If you have activated the automatic IP assignment ("DHCPv4" setting is activated), you can view the IP address of the PDU directly on the display (see section 7.1 "Operating using the control components on the front").

7.2.5 Settings

All other possible PDU settings are described in section 9 "Operating the PDU".

7.3 Telnet/SSH connection

A Telnet connection can be made using a suitable utility program such as "PuTTY". The following explanations describe establishing an SSH connection. A connection via Telnet is also possible.
The following description assumes that a direct connection between a computer and the PDU is established.
If the connection is established via a network with DHCP, the IP address 192.168.0.190 in the following description must be replaced with the address assigned dynamically to the PDU (see section 7.2.1 "Establishing the network connection").

7.3.1 Establishing the connection

To establish an SSH connection, proceed as follows:

- Launch the "PuTTY" program.
- Enter the IP address of the PDU in the **Host address (or IP address)** field.
- Select the option "SSH" as the **Connection Type**.
- Enter port number "2222" in the **Port** field.
- If applicable, enter a name for the connection such as "PDU SSH" in the **Saved Sessions** field.
- Click on **Save** to save your settings.

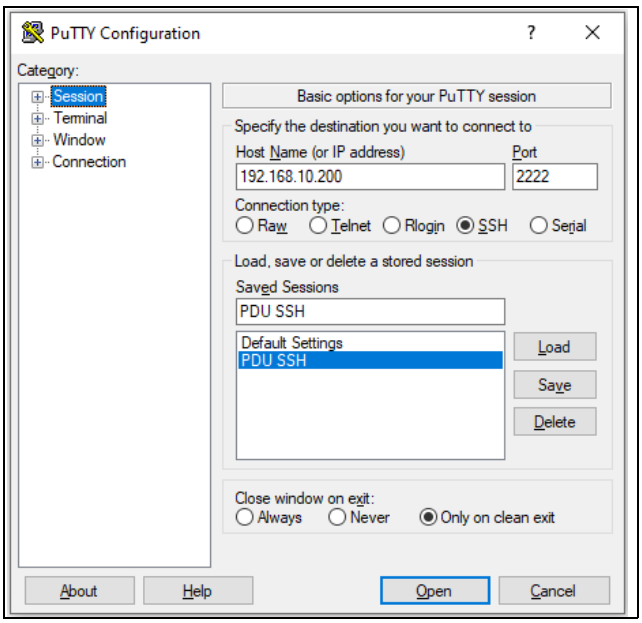

Fig. 39: "PDU SSH" Connection setting

- Click **Open** to establish the connection.
  The login screen appears.

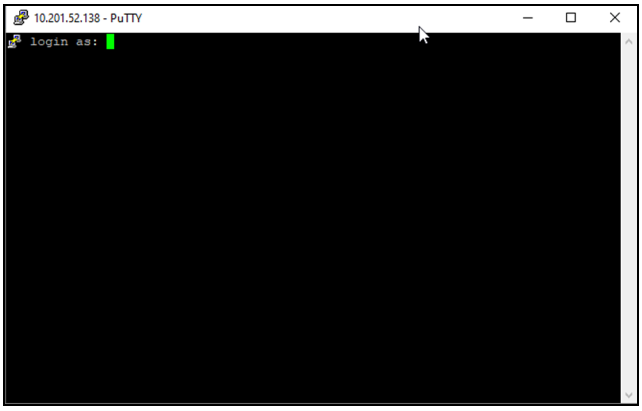

Fig. 40: Login screen

7.3.2 Login to the PDU

Once the connection has been established, the login screen appears.

- In the line **login as:** enter your user name.
- In the line **Password:** enter the associated password.

Note:
The user "admin" with the password "admin" is the factory default setting.

Also here, the factory-set password must be modified after the first login (see section 7.2.3 "Changing the password after the first login").

The **Main Menu** will appear.

EN

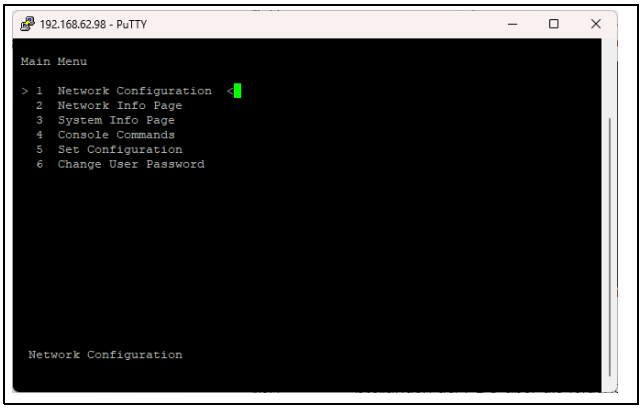

Fig. 41: Main Menu

7.3.3 Menu structure

A SSH connection can be used to make the basic PDU settings using the following menu structure:

1	Network Configuration		
	1	IPv4 Configuration	
		1	IPv4 Address
		2	IPv4 Subnet mask
		3	IPv4 Gateway
		4	Enable/Disable DHCPv4
	2	IPv6 Configuration	
		1	Enable/Disable IPv6
		2	IPv6 Address 1
		3	IPv6 Address 2
		4	DHCP Mode
	3	DNS Configuration	
		1	DNS Primary Server
		2	DNS Secondary Server
		3	DNS Mode
		4	DNSv6 Primary Server
		5	DNSv6 Secondary Server
		6	DNS Mode
		7	Hostname
		8	DNS Primary Server 2
		9	DNS Secondary Server 2
		A	DNS Mode 2
		B	DNSv6 Primary Server 2
		C	DNSv6 Secondary Server 2
		D	DNS Mode 2
	4	LDAP Configuration	
		1	LDAP Server
		2	Enable/Disable LDAP
	5	Radius Configuration	
		1	Radius Server
		2	Enable/Disable Radius
	6	Modbus/TCP Configuration	
		1	Change Server Port
		2	Enable/Disable Modbus/TCP
	7	Settings Ethernet Port	
	8	System Name	
	9	System Contact	
	A	System Location	
	B	Actual Date	
	C	Actual Time	
	D	Beeper	
	E	Security	
		1	Enable Web Access
		2	HTTP Port
		3	HTTPs Port
		4	Enable FTP access
		5	FTP Port
		6	Enable SSH access
		7	SSH Port
		8	Enable Telnet access
		9	SFTP Port
		A	Enable Telnet access
		B	Telnet Port
	F	SNMP Configuration	
		1	Enable SNMP V1 & V2
		2	Read Community
		3	Write Community
		4	Trap Community
		5	Enable SNMP V3

	G	Reboot Unit
2	Network Info Page	
3	System Info Page	
4	Console Commands	
	1	Command (by DescName)
	2	Command (by VariableName)
	3	RS232 Console
5	Set Configuration	
	1	Set General Configuration to Default
	2	Set all Tasks to Default
	3	Set all Charts to Default
6	Change User Password	

You can also use the PDU website to access most of the parameters that can be accessed using the SSH connection. The corresponding descriptions may be found in section 9 "Operating the PDU". Only the few settings that are not available via the website are described in section 7.3.6 "Special settings and remarks".

7.3.4 Navigating through the menu structure

The individual menu items are selected with the number that precedes each menu item.

Starting at the **Main Menu**, for example, it is possible to select the following five sub-menus:

– Key "1": **Network Configuration** sub-menu
– Key "2": **Network Info Page** sub-menu
– Key "3": **System Info Page** sub-menu
– Key "4": **Console Commands** sub-menu
– Key "5": **Set Configuration** sub-menu
– Key "6": **Change User Password** sub-menu

Alternatively, you can use the "arrow" keys, the "Enter" key and the "Esc" key to navigate through the menus.

7.3.5 Entering values

The stored parameter values are shown in pointed brackets, ">" and "<", at the end of each line. To change a value, as when navigating through the menu structure, select the appropriate parameter using the associated number. To accept a changed value, you must always press the "Enter" key.

Example 1: Changing the network settings for IPv4

- In the **Main Menu**, press key "1" to select the **Network Configuration** sub-menu.
- Press key "1" again to select the **IPv4 Configuration** sub-menu.
- Press key "1" again to select the **IPv4 Address** parameter.
- Clear the default address stored there and enter instead a valid network address.
- Press "Enter" to confirm your selection.
  The entered address is displayed accordingly at the end of the line.
- Press the "Esc" key to exit the **IPv4 Configuration** menu.

If the device is accessed via the console menu (see section 7.3.3 "Menu structure"), changing the IP address means that initially no further communication via the HyperTerminal is possible.

- First terminate the current connection.
- Establish a new connection with the changed IP address.

Example 2: Changing the name of the contact person

- In the **Main Menu**, press key "1" to select the **Network Configuration** sub-menu.
- Press key "9" to select the **System Contact** parameter.
- Enter the name of the required contact person, e.g. **Contact person PDU**.
- Press "Enter" to confirm your selection.
  The entered name is displayed accordingly at the end of the line.
- Press the "Esc" key again to exit the **Network Configuration** menu.

Note:
If after changing a value you switch to another sub-menu, the value is **not** accepted.

7.3.6 Special settings and remarks

The following settings are not available on the website but only via a Telnet connection.

Parameter	Explanation
Settings Ethernet Port	Set the transmission speed and the duplex procedure or auto-negotiation for the PDU network interface.
Reboot unit	Restart PDU
Set General-Configuration to Default	Reset all PDU settings to the factory status
Set all Tasks to Default	Reset all tasks to the factory status (empty)
Set all Charts to Default	Reset all Charts to the factory status (empty)

Tab. 6: Special settings

EN

Parameter	Explanation
Console command	Execute switch commands for the PDU outputs (**Main Menu** > "4" **Console Commands**). Entry "3" **RS232 Console** has no function. Detailed instructions in this regard may be found in section 7.3.7 "Performing switch commands".

Tab. 6: Special settings

If you use a Telnet connection to select the **Automatic DHCP** value for the **DNS mode** parameter in the **DNS configuration** sub-menu, please note the following:

- In the **IPv4 Configuration** sub-menu, set the value **Enabled** for the **Enable/Disable DHCPv4** parameter.
- Alternatively or additionally, set the value **DHCPv6** in the **IPv6 Configuration** sub-menu for the **DHCPv6 Configuration** parameter.
- Under no circumstances should you retrospectively deactivate DHCP for **both** protocols IPv4 and IPv6 once you have implemented the above DNS configuration.

7.3.7 Performing switch commands

A user with admin rights can switch the outputs of a PDU switched/managed via a Telnet connection.

- In the **Main Menu**, press key "4" to select the **Console Commands** sub-menu.

You can now activate an output using either the name (DescName) assigned to the relay output or the complete variable name.

Note:
The following representation shows a selection from the website and is merely intended to explain the "DescName", "VariableName" and "Command" terms.

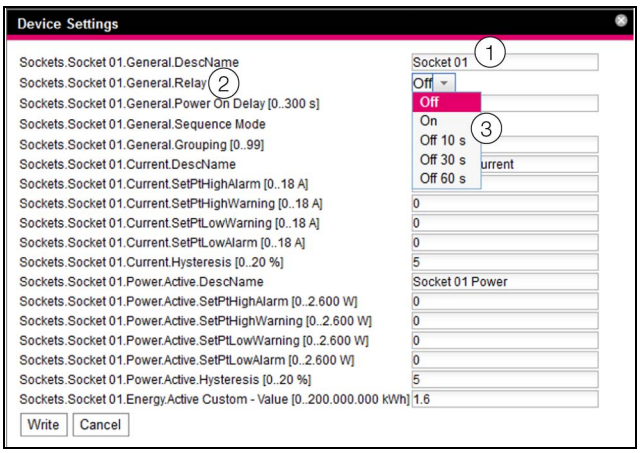

Fig. 42: Performing switch commands

Key

1 DescName
2 VariableName
3 Command

Switching using the assigned name

- Press key "1" to select the **Command (by DescName)** command.
- Enter the command in the format "Device.DescName:Command".

Parameter	Explanation
Device	The device index (ID number) that is prefixed to the associated Real Device in the navigation area of the PDU website
DescName	Individual description that was assigned to the output or socket (fig. 42, item 1).
Command	The command to be performed. The following commands are supported: "Off", "On", "Off 10 s", "Off 30 s", "Off 60 s" (fig. 42, item 3).

Tab. 7: Parameters (switching using the assigned name)

- Confirm your input (e.g. "2.Socket 1:Off") with Enter.

If the switching command has been executed successfully, an appropriate message will be displayed (e.g. "Device 2.Output 'Socket 01' switched to 'Off'"). If an error has occurred, an error message will be displayed (e.g. "Output 'Socket 24' not found").

Switching using the complete variable name

- Press key "2" to select the **Command (by VariableName)** command.
- Enter the command in the format "Device.VariableName:Command".

Parameter	Explanation
Device	The device index (ID number) that is prefixed to the associated Real Device in the navigation area of the PDU website (fig. 42, item 2).
Variable-Name	The variable name of the output or socket, comprised of three components, each separated by a dot.
Command	The command to be performed. The following commands are supported: "Off", "On", "Off 10 s", "Off 30 s", "Off 60 s" (fig. 42, item 3).

Tab. 8: Parameters (switching using the complete variable name)

- Confirm the input (e.g. "2.Sockets.Socket 01.General.Relay:Off") with Enter.

If the switching command has been executed successfully, an appropriate message will be displayed (e.g. "Device 2.Output 'Sockets.Socket 01.General.Relay' switched to 'Off'"). If an error has occurred, an error message will be displayed (e.g. "Output 'Sockets.Socket 01.General.Relay' not found").

7.3.8 Logging off from the PDU

Once you have performed all the required settings on the PDU, log off again. To do this:

- Press the "Esc" key repeatedly until you return to the **Main Menu**.
- Press the "Esc" key again. The following message appears at the lower screen edge:
  Logout? [Y = Yes]
- Press the "Y" key to log off.
- Press any other key if you do not want to log off.

EN

8 PDU master/slave mode

From software version 7.17.20 onwards, the PDU may generally be operated in two different modes: master/slave mode or standalone mode. In its supplied state, the PDU is always configured for "standalone mode". In master/slave mode, up to three further PDUs (slaves) may be connected to one master PDU. In this way, all values, settings and measurements from the slave PDUs can be managed from the master PDU using an Ethernet connection (an IP address). The same is true of the following protocols: SNMP, OPC UA, Modbus. All data communication is encrypted. Figure 43 shows how to connect the devices.

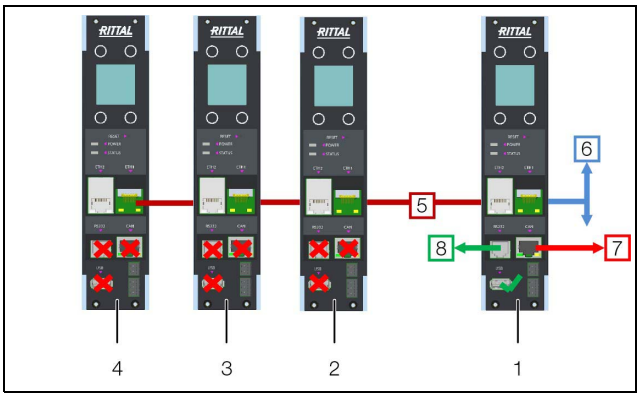

Fig. 43: Connecting the PDU for master/slave operation

Key

1 Master PDU
2 Slave 1 PDU
3 Slave 2 PDU
4 Slave 3 PDU
5 PDU network
6 Customer network
7 Sensors
8 LTE

8.1 Interface characteristics in master/slave mode

– **Master PDU**: The bridge function between the two Ethernet interfaces is deactivated, i.e. there are two independent Ethernet interfaces with their own MAC addresses. The first interface (ETH1) is connected to the customer network, while the second interface (ETH2) is connected to the first slave PDU.
– **Slave PDU**: The bridge function between the Ethernet interfaces is activated. The connection between the slave PDUs is made directly via either ETH1 or ETH2 (without using the customer network).
– **IP addresses**: The IP addresses of the slave PDUs and the master PDU's ETH2 (connection to the slave PDUs) are predefined. The IP address of the master PDU's ETH1 can be prescribed by the customer network via DHCP or set by the customer, either via the website or on the display. The IP addresses are shown on the display in the Settings – Controller information page menu.

Note:
USB, RS232 and the CAN interface are only supported on the master PDU.

8.2 Master/slave configuration of the PDU

The operating mode, or master/slave mode, must be defined or edited for each PDU via the integral display. The following settings can be made here:
– Stand-alone
– Master
– Slave 1
– Slave 2
– Slave 3

If the display is switched off: Press any key. A menu will appear showing the power per phase. Fig. 44 shows the screen for a single-phase PDU.

Fig. 44: Star menu

■ Press the "Esc" key (fig. 21, item 1) to display the **Rittal** main menu.

Fig. 45: Rittal main menu

■ Navigate to the **PDU Mode** menu via the **Setup** menu. After selecting the **PDU Mode** menu, you will be asked to confirm with the security PIN. Please follow the instructions in section 7.1.3 "Entering the PIN".

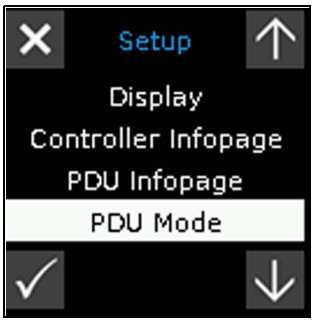

Fig. 46: Setup menu

- After entering the security PIN (where applicable), you can then select the operating mode (e.g. Master) from the **PDU Mode** menu.

Fig. 47: Selection operating mode

- Press "Enter" to confirm your entry. A security prompt will appear, which you should confirm where applicable.

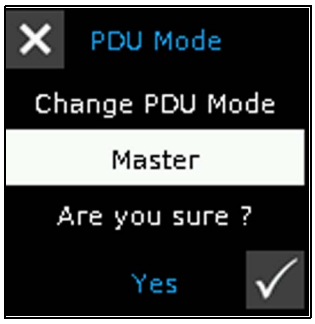

Fig. 48: PDU Mode menu – security query

Note:
Always configure the Master PDU first.

To configure the slave PDU, repeat the above procedure and define the PDU as a "Slave". The system supports operation of up to three slave PDUs with one master PDU.

After defining the operating modes for all PDUs, the devices must be linked together (known as "pairing"). This is done via the Master PDU menu.

- In the Master PDU, navigate via the **Setup** menu to the **PDU Pairing** menu and confirm your selection. After selecting the **PDU Pairing** menu, you will be asked to confirm with the security PIN. Please follow the instructions in section 7.1.3 "Entering the PIN".

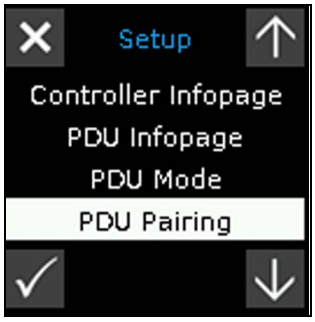

Fig. 49: Selection PDU Pairing menu

- After entering the PIN code, pairing will launch. Please wait until all PDUs have been paired (in this example, there are two slave PDUs plus the master PDU).

Fig. 50: PDU Pairing

Note:
Once a slave PDU has paired with a master PDU, it can no longer be paired with a different master PDU. To do so, you will need to reconfigure the slave PDU via the **PDU Mode** menu.

Note:
Software updates for the slave PDU are distributed via the master PDU. The master PDU must be updated first. For further information, please visit www.rittal.com or contact Rittal Service (see section 16). The software updates are subsequently distributed automatically among the individual slave PDUs.

EN

9 Operating the PDU

9.1 General information

This chapter describes all the settings available via HTTP access.

9.2 General operation

9.2.1 Layout of the screen pages

After logging on to the PDU (see section 7.2.2 "Access to PDU interface website"), the Web user interface for operating the device is displayed. In principle, the screen is divided into four sections:

1. Top section: Display general information about the device, change the password and log off the current user (see section 9.2.8 "Logging off and changing the password").
2. Left-hand section (navigation area): Select the overall system or respective component for which information is displayed in the right-hand section of the screen (see section 9.2.2 "Left-hand navigation area").
3. Right-hand section (configuration area): Display seven tabs (see section 9.2.3 "Tabs in the configuration area") with input options for all settings.
4. Bottom section: Display messages (see section 9.2.4 "Message display").

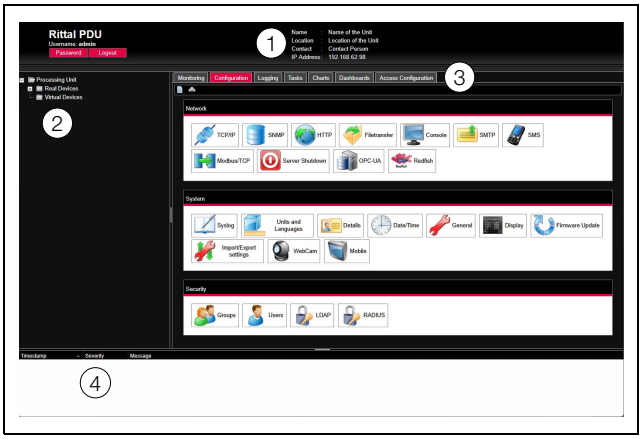

Fig. 51: Layout of the screen pages

Key

1 General information
2 Navigation area
3 Configuration area with tabs
4 Message display

9.2.2 Left-hand navigation area

The complete system, including all installed components, is displayed as a tree structure in the navigation area of the screen.

The Processing Unit, namely, the complete system, is located at the top of the navigation area. A sub-group Real Devices is displayed below the overall system. The PDU controller as well as the specific measured quantities or measured values variants are displayed in this group.

Whereby, the designations have the following meanings:

– PDU-MAN: PDU managed
– PDU-SWI: PDU switched
– PDU-MET: PDU metered
– PDU-MET_P: PDU metered+

The connected sensors are sorted into this group.

Each device can assume different statuses. To allow rapid identification of the current status, the symbol preceding the respective device is colour-coded:

Symbol	Explanation
	Status "OK". There are no warnings or alarm messages.
	Status "Warning". There is at least one warning message.
	Status "Alarm". There is at least one alarm message.
	Status "OK". The additional information symbol indicates that further status information may be displayed. This symbol is displayed only when the logged-in user has at least read access to the data of the associated device (see section 9.7.4 "Radius Configuration").
	Status "Detected". The sensor has recently been added and not yet confirmed. This sensor must still be confirmed via the **Acknowledge Sensors** sub-menu, either directly on the PDU or on the website.
	Status "Lost". Communication with a sensor is no longer possible. The connection must be checked. Alternatively, the sensor can also be logged off by confirming.
	Status "Changed". The sequence of sensors has been altered and not yet confirmed. This configuration change must still be confirmed via the **Acknowledge Sensors** sub-menu, either directly on the PDU or on the website (see section 6.4 "Acknowledging messages").

Tab. 9: Symbols for the status display

9.2.3 Tabs in the configuration area

Seven tabs are displayed in the right-hand area of the screen:

1. Monitoring: The current data for the PDU or connected devices (see section 9.3 "Monitoring index tab").
2. Configuration: Configuration of basic settings (see section 9.4 "Configuration index tab").
3. Logging: The message archive for the PDU or connected devices (see section 9.10 "Logging").
4. Tasks: Creating links between different values and related actions (see section 9.11 "Tasks")
5. Charts: Diagrams showing the development of variables over time (see section 9.12 "Charts").

6. Dashboards: Creating various views as dashboards (see section 9.13 "Dashboards")
7. Access Configuration: Configuration of access authorisations for connected access control systems to the server enclosure doors (optional).

The content of the **Monitoring** and **Configuration** tabs depends on whether the complete system ("Processing Unit" entry) or an individual component, e.g. "Master PDU" entry, has been selected in the left-hand area of the screen page.

9.2.4 Message display

Current pending messages are displayed in the bottom section of the screen. The message display is structured as follows:

1. Timestamp: The date and time when the error occurred (fig. 52, item 1).
2. Severity: Severity of the error. A distinction is made between Warnings and Alarms (fig. 52, item 2).
3. Message: Error message in plain language (fig. 52, item 3).

Fig. 52: Layout of message display

Key

1 Date and time
2 Error category
3 Error message in plain language
4 Component with error message
5 Component
6 Parameter

Additionally, errors occurring are displayed as follows:

– Left-hand section (navigation area): In the navigation area, the symbol preceding the component where the error occurred appears red in the event of an alarm message and yellow in the event of a warning message (fig. 52, item 4).
– Right-hand section (configuration area): On the **Monitoring** index tab, the entire component and the specific parameter to which the warning or alarm applies appears red or yellow (fig. 52, items 5 and 6).
– The multi-LED on the front of the PDU is permanently illuminated red or yellow.

Once the cause of an error message has been rectified, the corresponding message may be automatically deleted from the message display. The status of the respective component may also be reset, and all other displays triggered by the error may disappear. However, this depends on the selected alarm configuration (see section 9.9 "Alarm Configuration"). In some cases, error messages and the status may remain in the overview until the messages have been acknowledged (see section 6.4 "Acknowledging messages").

If the device configuration is permanently altered, e.g. a new sensor is connected to the PDU, this is likewise output in the message display as an "Alarm" type error message. Additionally, in such cases, the multi-LED on the front of the PDU will cyclically flash green – orange – red. Such configuration changes are not deleted from the message display until confirmed by the operator (see section 6.4 "Acknowledging messages").

Example: Increased voltage level

If the PDU measures a voltage above the value stored as "SetPtHighWarning", a warning message will be emitted.

In such cases, the display will change as follows:

– The symbol preceding the PDU-MAN component in the navigation area is coloured yellow.
– The background is yellow-highlighted in the "L1 Voltage" field on the **Monitoring** tab in the table of the PDU measured total values. The "High Warn" warning message is also emitted.
– A corresponding warning message will appear in the message display.

When the voltage falls back below the "SetPtHighWarning" value plus the hysteresis value (see section 15 "Glossary"), the alarm configuration will determine whether or not the message is automatically deleted from the message display and the associated status displays are reset (see section 9.9 "Alarm Configuration").

9.2.5 Other displays

The operator's entries in the Web interface are automatically checked against preset rules, depending on the parameter entered. This means that changes can only be saved if all values have previously been correctly entered in a dialogue.

EN

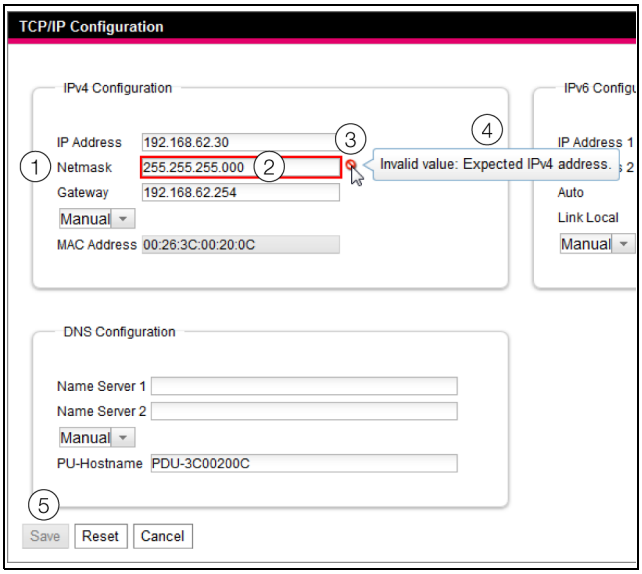

Fig. 53: Display of an incorrect entry

Key

1 **Netmask** field
2 Incorrect entry
3 Prohibited symbol
4 Note
5 Inactive button

The following changes occur in case of an incorrect entry in the dialogue (illustrated here by the example of an incorrectly entered IP address):

– A red "prohibited symbol" (fig. 53, item 3) appears after the incorrect entry (fig. 53, item 2) in the **Netmask** field (fig. 53, item 1).
– By hovering over the prohibited symbol with the mouse, additional information about the error will appear (fig. 53, item 4).
– The **Save** button is deactivated (fig. 53, item 5), so that the current values cannot be saved.

Proceed as follows to rectify the error:

■ Using the information provided, identify the precise nature of the incorrect entry.
  In this particular example, the value entered does not comply with the format of an IP address.
■ Correct the defective value, e.g. by entering the value "255.255.255.0".
  The "prohibited symbol" is masked out and the **Save** button is activated.
■ Save the settings by pressing the **Save** button.

9.2.6 Changing parameter values

Different parameters for the currently selected component are displayed in the list view of the **Monitoring** index tab. Some of these parameters can be adjusted by the operator, while others have fixed values assigned to them.

For all parameters that can be changed, an "Edit" symbol in the form of a stylised notepad and pen will appear after the respective parameter if the mouse pointer is placed in the relevant line (fig. 54, item 1).

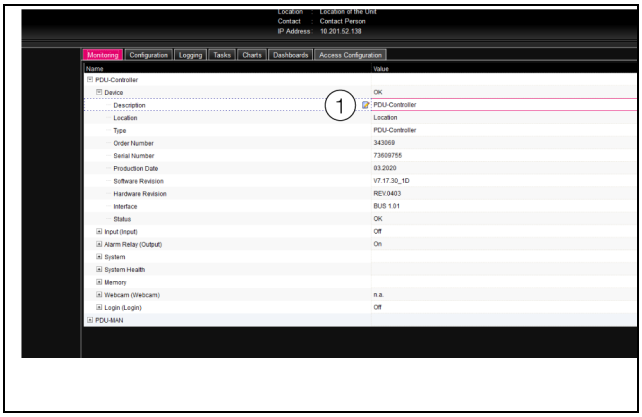

Fig. 54: Editable parameter with "Edit" symbol

Key

1 "Edit" symbol

If this symbol does not appear, the corresponding value cannot be altered.

Example:

■ Select the "PDU-Controller" entry in the navigation area.
■ In the right-hand part of the screen, select the **Monitoring** index tab.
■ One after the other, open the "PDU-Controller" and "Device" entries by clicking on the "plus" symbol in front of the entry (fig. 55, item 1).

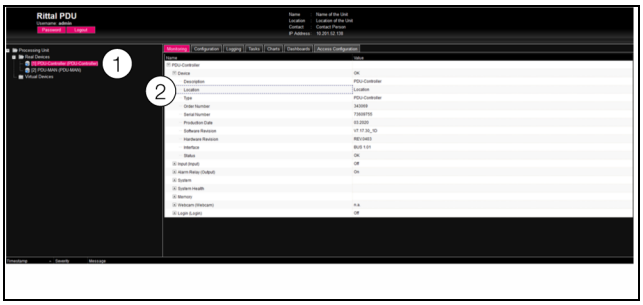

Fig. 55: Select an individual parameter

Key

1 PDU-Controller and Device entries
2 "Location" parameter

■ Position the mouse pointer at the end of the first column in the "Location" line (fig. 55, item 2).
  An "Edit" symbol will appear, and the mouse pointer will change to a "Hand" symbol.
■ Click on the "Edit" symbol.
  A "Device Settings" dialogue will appear with the parameter "Device.Location".

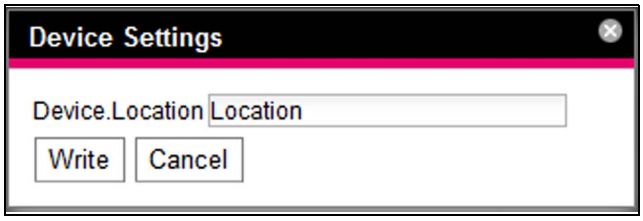

Fig. 56: "Device settings" dialogue

- Enter the location of the PDU here, e.g. "PDU server enclosure 1".
- Confirm your entry by clicking the **Write** button.
  The dialogue box will close and the new value will appear in the "Location" line.
- Next, position the mouse pointer at the end of the first column in the "Type" line.
  Because **no** "Edit" symbol appears, the value associated with "PDU-Controller" cannot be changed.

You may wish to amend several values simultaneously, or may not know the exact entry under which the required parameter is stored. In such cases, you can also display all parameter values of the editable lower-level entries in a shared window.

- Simply open the "PDU-Controller" entry by clicking on the "plus" symbol in front of that entry (fig. 57, item 1).
- Position the mouse pointer at the end of the first column in the "Device" line (fig. 57, item 2).
  An "Edit" symbol will appear, and the mouse pointer will change to a "Hand" symbol.

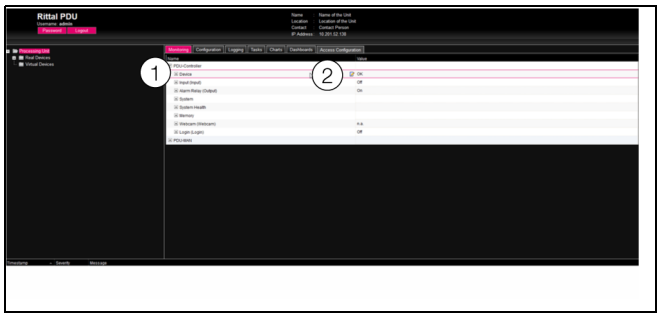

Fig. 57: Select multiple parameters

Key

1 Device entry
2 "Edit" symbol

- Click on the "Edit" symbol.
  The "Device Settings" dialogue will appear with the two parameters "Device.Description" and "Device.Location".

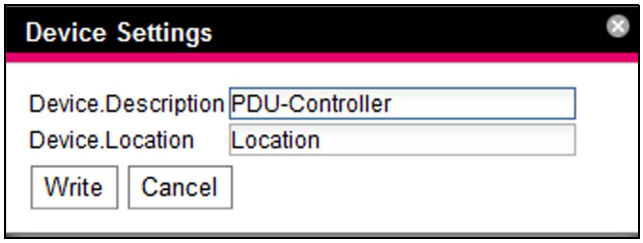

Fig. 58: "Device Settings" dialogue with multiple parameters

- Save the amended values for all required parameters.
- Confirm your entries by clicking the **Write** button.
  The dialogue is closed.
- Extend the "Device" entry by clicking on the "plus" symbol in front of it.
  You can now view all changed values.

The "Device Settings" dialogue shows all editable parameters below the previously selected level. For example, by clicking on the "Edit" symbol in the top level "PDU-Controller", **all** parameters that can be changed for the entire component will be displayed.

Note:
If you attempt to amend too many variables, an error message will appear. In such cases, you will need to move down a level.

9.2.7 Undock function

For some devices, such as the webcam or the sockets overview, a graphical overview is displayed on the PDU website. This overview can be opened from the current browser window and observed in a separate window.

Note:
The Undock function is **not** available for Internet Explorer; this button is missing in this case.

- Select the associated device, e.g. "PDU-MAN", in the navigation area.
- Select the **Monitoring** tab in the right-hand area of the screen page.
- Expand the associated entry, e.g. "PDU-MAN", by clicking the "plus" character in front of the entry.

If, after selecting the "PDU-MAN" level, the lower-level "Device", "Total", etc. entries are displayed, switch to the graphical representation as follows:

- Click the coloured "graphic" symbol next to the "PDU-MAN" entry that resembles a stylised bar graph (fig. 59). The display switches to the graphical representation

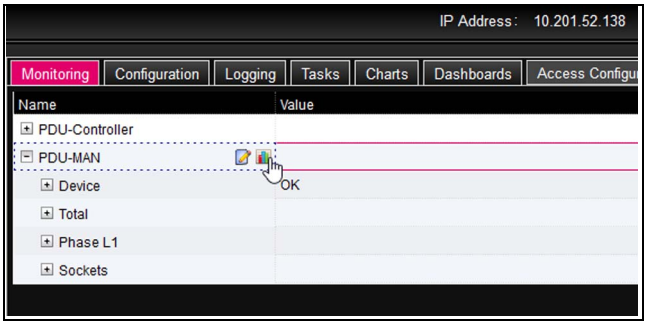

Fig. 59: "Graphic" symbol

- Click the **Undock** button in the graphical representation.
  The graphical representation window is undocked from the PDU website and the "Visualisation is undocked" message appears in the main window.

EN

The undocked window can be moved and resized independently of the PDU website itself. This function may be used by all connected devices, allowing you to create a complete overview on the screen of your PC.

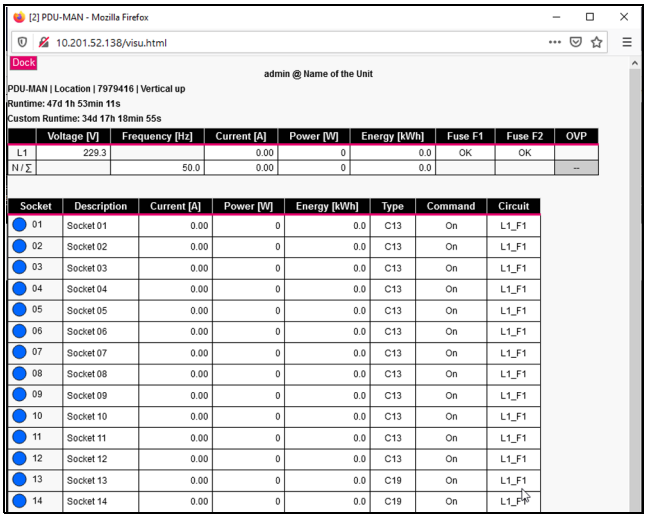

Fig. 60: Undocked window

- In the separate window, click the **Dock** button or simply close the window to display the overview in the main window again.

Note:
If a value in editing mode is present in the main window, all undocked windows become dark and actions can no longer be performed there.

9.2.8 Logging off and changing the password

For each user group (and thus also for every user), it is possible to specify a time after which the user will be logged out automatically in case of inactivity (see section 9.7 "Security"). A user can, however, also log out from the web user interface.

Note:
After the direct login to a dashboard, the user is not logged out automatically after the specified time.
The user remains logged in to the PDU while the dashboard is open.

- Click the **Logout** button on the top right of the screen page.
  The logout occurs immediately, and the Login window opens.

Users can also change their own password in the Web user interface. For security reasons, this is also necessary directly after the first login. The user must then specify a new strong password.

- Click the **Password** button on the top right of the screen page.
  The dialogue "Set new Password for User 'XXX'" will appear.

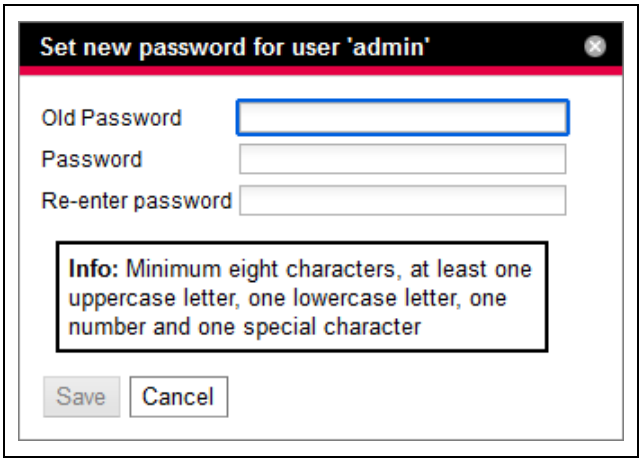

Fig. 61: Change the password

- Enter the new password in the "New Password" line. Whereby, observe the notes for creating a secure password.
- Re-enter the appropriate password in the "Re-enter Password" line.
- Confirm your entries by clicking on **Save**.
  The dialogue is closed when the password conforms to the required rules.

You will need to use the new password the next time you log into the system.

Note:
Independent of this change, a user with the appropriate rights can change the passwords of **all** users via the user administration (see section 9.7.2 "Users").

9.2.9 Reorganising the connected components

When new components are installed on the PDU, they are inserted into the next free space in the navigation area and allocated a corresponding ID number. Particularly following multiple upgrades or changes to the order of the connected components, this can mean there is no longer any relationship between the position of the components in the CAN bus and the corresponding ID number.

The "Reorganize" function allows you to renumber all connected components,

- In the navigation area, right-click on the "Processing Unit" entry or any other connected component.
- Next, left-click on the "Reorganize" entry in the context menu.

A message appears stating that reorganisation has led to a re-indexing of components. This could cause problems when accessing these components, e.g. via SNMP, and access will need to be reconfigured. However, the "Alarm Configuration" of the individual sensors is retained.

The sensors are then registered automatically again on the PDU.

Note:
When reorganising the components, all components with the status "Lost" are removed from the navigation area.

9.3 Monitoring index tab

All settings for the individual system components are made in the **Monitoring** index tab, such as limits for warning and alarm messages. The display in the right-hand area of the screen page depends on which component was selected in the navigation area.

- If you select the "Processing Unit" entry (top node) in the navigation area, all "Real Devices" will be available for selection in the **Monitoring** index tab.
- If you select the "Real Devices" entry in the navigation area, only components belonging to that group are available for selection on the **Monitoring** tab.
- If you select a special component in the navigation area, such as the "PDU-Controller" entry, only this component is available for selection on the **Monitoring** tab.

Note:
It is not possible to change the parameters of different components at the same time.

The following sections 9.3.1 "Device" to 9.3.13 "Sockets for the variants PDU managed" only provide detailed descriptions of editable parameters.
Because the "DescName" parameter can be changed in every level, other than the "Device" level, it is described only once.

Parameter	Explanation
DescName	Specific description of the selected level.

Tab. 10: Settings of the "DescName" parameter

There are also display values which are provided for information purposes only.

9.3.1 Device

The general settings for the PDU or for the associated selected component are performed at the "Device" level.

Parameter	Explanation
Description	Individual description of PDU.
Location	Installation location of PDU.

Tab. 11: Settings at "Device" level

Parameters that provide detailed information about the currently selected component, such as the software and hardware versions used, are also displayed. It is advisable to have such information to hand, particularly in order to ensure fast troubleshooting of queries with Rittal.

9.3.2 Input

General settings for the digital input are made at the "Input" level.

Parameter	Explanation
Logic	Select a switching command of the input. The following options are available 0: Off / 1: On 0: On / 1: Off 0: OK / 1: Alarm 0: Alarm / 1: OK
Delay	Time delay after which the status message changes.

Tab. 12: Settings at the "Input" level

The following parameters are also displayed for the digital input:

Parameter	Explanation
Value	Current value of the input.
Status	Current status of the input considering the delay value and the configured logic.

Tab. 13: Displays in the "Input" Level

9.3.3 Alarm Relay (Output)

General settings for the integral alarm relay are made at the "Alarm Relay (Output)" level.

Parameter	Explanation
Logic	Select a switching command for the alarm relay 0: Off / 1: On 0: On / 1: Off

Tab. 14: Settings at the "Alarm Relay (Output)" level

The following parameters are also displayed for the Alarm Relay (Output):

Parameter	Explanation
Relay	Current status of the alarm (On/Off).
Status	Current status of the PDU with regard to the Alarm Relay (Output) (On/Off).

Tab. 15: Display in the "Alarm Relay (Output)" level

9.3.4 System

The following additional information about the PDU controller is displayed in the individual sub-levels of the "System" level.

EN

"V24 unit (V24 Port)" level
Information about a connected GSM or LTE unit is displayed.

Parameter	Explanation
Message	Current status of the unit. One of the messages below is displayed here, depending on the status of the unit.
Signal	Current signal strength.
Status	Current status of the unit ("OK" or "n.a." if no unit is connected). When these variables are changed (removal of a connected unit), a task can be used to send an appropriate message (e.g. by e-mail, SMS or SNMP).

Tab. 16: Displays in the "V24 unit (V24 Port)" level

The "Message" parameter at the "V24 unit (V24 Port)" sub-level can have the following values.

Parameter	Explanation
no SMS unit found	No unit connected.
SMS unit found	SMS unit connected, unit is registered in the network.
SMS Unit o.k.	SMS unit ready.
sending SMS	SMS is being sent.
SMS unit timeout	SMS unit timeout, no connection possible.
SMS unit: PIN is missing	No PIN entered.
SMS unit: Service number missing	No service number entered.
SMS unit: wrong PIN	Incorrect PIN entered.
SMS unit: PUK needed	PUK must be entered.
SMS unit: not registered	SMS unit not registered in the network.
MSN missing	No MSN entered.

Tab. 17: Status at "V24 unit (V24 Port)" level

"PoE (PoE)" level
The status of the PoE is displayed at this level, however, only for the "PDU managed" and "PDU switched" variants.

9.3.5 System Health

General parameters about the PDU controller are displayed in the individual sub-levels of the "System Health" level.

"System Temperature (Temperature)" level
The following parameters for the system temperature are displayed at this level:

Parameter	Explanation
Error Info	Current error message.
Status	Current status of the system temperature.

Tab. 18: Displays in the "System Temperature" level

"System Current" level
The following settings can be configured at this level:

Parameter	Explanation
Command	Selecting the "Reset" command switches the voltage on again after an overcurrent at the CAN and RS232 interface.

Tab. 19: Settings at "System Current" level

The following parameters are also displayed:

Parameter	Explanation
Error Info	Current error message.
Status	Current status of the system current.

Tab. 20: Displays in the "System Current" level

"System Supply" level
The following parameters for the supply voltage are displayed at this level:

Parameter	Explanation
Error Info	Current error message.
Status	Current status of the power supply.

Tab. 21: Displays in the "System Supply" level

9.3.6 Memory

The "Memory" level enables you to view information about a USB stick installed on the PDU. This storage medium must have a maximum total storage space of 32 GB, must be formatted with the FAT32 file system, and is used for recording charts (see section 9.12 "Charts").

"USB stick" level

Information about an installed USB stick is displayed here. Communication with the USB stick is initially disabled as factory setting.

Parameter	Explanation
Size	Total storage space on USB stick.
Usage	Used storage space on the USB stick as a percentage of the total storage space.
Command	Commands for the USB connection of the PDU. "On": The USB connection is activated. "Off": The USB connection is deactivated (default). "Eject": The USB stick is logged off from the system. It can then be removed without potential data loss.
Status	Current status of USB stick. "OK": USB stick installed and operational. "Off": The USB connection is deactivated. "Inactive": USB stick installed but logged off. "n.a.": No USB stick installed. "High Warn": Warning message if more than 80% of the storage space has been used. "Too High": Alarm message if more than 90% of the storage space has been used.

Tab. 22: Displays in the "USB stick" sub-level

Before removing an external storage medium used to store chart data, the storage medium must first be logged off on the PDU. Alternatively, the corresponding charts may be manually deactivated beforehand (see section 9.12.1 "Configuring a chart").

Note:
If an external storage medium is removed directly while charts are activated, this may lead to a loss of chart data.

9.3.7 Webcam

In the "Webcam" level, you can view previously created images or the live stream of a webcam from Axis that supports the "VA-PIX Version 3" API connected in the network.The appropriate access data for this webcam must have been entered previously (see section 9.6.9 "WebCam").

Note:
A live stream cannot be viewed with Internet Explorer. To view the live stream with Opera Browser, webcam password protection must be revoked.

You have a choice between two display options for the webcam:

– Tree representation: This allows fast, targeted access to individual parameters.
– Graphical representation: Graphical information (such as previously created images or a live stream) is displayed.

Note:
The switching between the two display options is described in section 9.2.7 "Undock function".

In the tree representation, the following settings for the webcam are configured:

Parameter	Explanation
Command	The selection of the "Trigger" command manually initiates the creation of the individual images.

Tab. 23: Settings at "Webcam" level

The following parameters are also displayed for the webcam:

Parameter	Explanation
Status	Current status of the webcam. "n.a.": No webcam connected or webcam not configured. "OK": A webcam is connected and operational. "Busy": The webcam creates images that were initiated by a trigger.

Tab. 24: Displays in the "Webcam" level

The actual operation and the viewing of images are performed in the graphical representation.

- Actuate the "Selection" button.
- In the opened "Webcam Selection" window, select in the first dropdown list, whether
  – no image ("None" setting),
  – the live stream ("Live Stream" setting) or
  – a saved image of a specific date should be shown.
- If you want to view previously saved images, also select the start time of the sought image in the following dropdown list.
- Click the **OK** button to confirm the input.
- Click the **Backward** or **Forward** button to scroll between all individual images that were created by initiating a specific trigger.
- Select in the last dropdown list the resolution of the image from the specified values.

For saved images, the following supplementary information about the trigger is shown above the image:

– "Image X / Y": The number of the image and the total number of images (e.g. image no. 2 of 4 images).
– "Trigger caused by": The reason for initiating the trigger (e.g. Task 2).

Previously created images can be downloaded by FTP from the USB stick to a PC where they can be viewed and saved.

Downloading the image files

- Use preferably the "FileZilla" program to establish an FTP connection between a PC and the PDU (see section 10.1 "Establishing an FTP connection").
- Switch in the "FileZilla" program in the left-hand subwindow (PC) to the folder in which you want to save the image files.
- In the right-hand subwindow (PDU), switch to the "download" folder and then the "usb-stick/records/webcam/YYYYMMDD/hhmmss" subfolder. The "YYYYMMDD" date and the "hhmmss" timestamp represent the start time of the images.
- Right-click the required image file and select the "Download" action.

9.3.8 Login

The conditions for logins can be managed at this level. If all values are set to zero, password protection (Brute-Force function) is disabled.

Parameter	Explanation
Attempts	Setting of the possible login attempts per user.
Fail Delay	Currently unused.
Delay	Period until the new login after exceeding the login attempts.
Status	Current status of the login: "OK": Number of locked users 0-9. "Warning": Number of currently locked users 10-19. "Alarm": Number of currently locked users 20 or more.

Tab. 25: Settings at the "Login" level

9.3.9 PDU-XXX

This level is named in accordance with the PDU variant. Depending on the variant, the designation is as follows:

– PDU-MAN: PDU managed
– PDU-SWI: PDU switched
– PDU-MET: PDU metered
– PDU-MET_P: PDU metered+

The following description assumes a PDU managed (PDU-MAN).

You have a choice between two display options for the PDU-MAN level:

– Tree representation: This allows fast, targeted access to individual parameters.
– Graphical representation: Information about the individual parameters is displayed clearly in tables and status messages (such as warning messages and alarm messages) are signalled optically by giving the associated table fields a coloured background.

Note:
The switching between the two display options is described in section 9.2.7 "Undock function".

In the tree representation, advanced settings are made at the individual sub-levels of the "PDU-MAN" level in accordance with the functionality of this PDU variant.

The sub-levels described below are all assigned to the "PDU-MAN" level.

Detailed information about the "Device" sub-level can be found in the description in section 9.3.1.

9.3.10 Total

The settings for the neutral conductor current, the power and the energy of the PDU are displayed at this level.

Parameter	Explanation
Frequency-Value	Frequency of the power supply.
Mounting Position	Mounting position of the PDU ("Vertical up", "Vertical down", "Horizontal" or "Horizontal 180°").

Tab. 26: Display in the "Total" level

"Neutral Current" level

Limit values for the PDU neutral conductor current are specified at this level.

Parameter	Explanation
SetPtHigh-Alarm	Upper current limit; an alarm message is emitted if this is exceeded.
SetPtHigh-Warning	Upper current limit; a warning message is emitted if this is exceeded.
SetPtLow-Warning	Lower current limit; a warning message is emitted if this is undercut.
SetPtLow-Alarm	Lower current limit; an alarm message is emitted if this is undercut.
Hysteresis	Required percentage deviation for undercutting or exceeding the limit values for a status change (see section 15 "Glossary").

Tab. 27: Settings at the "Neutral Current" level

Note:
If "0" is entered for all limit values at the "Neutral Current" level, the status of the current is always "OK".

The following parameters are also displayed for the current:

Parameter	Explanation
Value	Current value of current.
Status	Current status of PDU with respect to current.

Tab. 28: Displays in the "Neutral Current" level

"Power" level

Power limits for entire PDU are indicated at this level.

Parameter	Explanation
SetPtHigh-Alarm	Upper power limit; an alarm message is emitted if this is exceeded.
SetPtHigh-Warning	Upper power limit; a warning is emitted if this is exceeded.
SetPtLow-Warning	Lower power limit; a warning message is emitted if this is undercut.
SetPtLow-Alarm	Lower power limit; an alarm is emitted if this is undercut.
Hysteresis	Required percentage deviation for undercutting or exceeding the limit values for a status change (see section 15 "Glossary").

Tab. 29: Settings at the "Power" level

Note:
If the value "0" is entered for all limit values at the "Power Active" level, the status of the electrical power is always "OK".

The following parameters are also displayed for power:

Parameter	Explanation
Value	Current power value.
Status	Current status of PDU with respect to power.

Tab. 30: Displays at the "Power Active" level

"Energy" level

Below this level, energy settings for the entire PDU are made at subsequent sub-levels.

"Active" sub-level

The following energy parameters are displayed at this level:

Parameter	Explanation
Value	Total energy value of PDU.
Runtime	Total runtime of PDU.

Tab. 31: Displays at the "Energy" level

"Active Custom" sub-level

The energy value for the user-defined energy meter can be reset at this sub-level (parameter "ActiveCustom.Value").

Parameter	Explanation
Value	User-defined energy meter. This meter can be reset to the value "0" or any other value.
Runtime-Value	Runtime of user-defined energy meter. This time period can be reset to the value "0" or any other value.

Tab. 32: Settings at the "Active Custom" level

"Overvoltage" level

This level is displayed only for a PDU with the "Overvoltage protection" special variant.

Parameter	Explanation
Status	Current status of the overvoltage protection.

Tab. 33: Displays in the "Overvoltage" level

9.3.11 Phase L1

Settings for phase L1 of the infeed are made at sub-levels below "Phase L1" level.

"L1 Voltage" level

Voltage limits for phase 1 are indicated at this level.

Parameter	Explanation
SetPtHigh-Alarm	Upper voltage limit; an alarm message is emitted if this is exceeded.
SetPtHigh-Warning	Upper voltage limit; a warning message is emitted if this is exceeded.
SetPtLow-Warning	Lower voltage limit; a warning message is emitted if this is undercut.
SetPtLow-Alarm	Lower voltage limit; an alarm message is emitted if this is undercut.
Hysteresis	Required percentage deviation for undercutting or exceeding the limit values for a status change (see section 15 "Glossary").

Tab. 34: Settings at the "L1 Voltage" level

Note:
If the value "0" is entered for all limit values at the "L1 Voltage" level, the status of the voltage is always "OK".

The following parameters are also displayed for voltage:

EN

Parameter	Explanation
Value	Current voltage value.
Status	Current status of PDU with respect to voltage.
CrestFactor-Value (only for single-phase PDU)	Ratio of the peak value to the rms value of the voltage. Also called the crest factor.
THD-Value (only for three-phase PDU)	THD-Value quantifies the non-linear distortion of a frequency / oscillation.

Tab. 35: Displays at the "L1 Voltage" level

"L1 Current" level

Current limits for phase 1 are indicated at this level.

Parameter	Explanation
SetPtHigh-Alarm	Upper current limit; an alarm message is emitted if this is exceeded.
SetPtHigh-Warning	Upper current limit; a warning message is emitted if this is exceeded.
SetPtLow-Warning	Lower current limit; a warning message is emitted if this is undercut.
SetPtLow-Alarm	Lower current limit; an alarm message is emitted if this is undercut.
Hysteresis	Required percentage deviation for undercutting or exceeding the limit values for a status change (see section 15 "Glossary").

Tab. 36: Settings at the "L1 Current" level

Note:
If "0" is entered for all limit values at the "L1 Current" level, the status of the current is always "OK".

The following parameters are also displayed for the current:

Parameter	Explanation
Value	Current value of current.
Status	Current status of PDU with respect to current.
THD-Value (only for three-phase PDU)	THD-Value quantifies the non-linear distortion of a frequency / oscillation.

Tab. 37: Displays at the "L1 Current" level

"Power" level

Various power values of phase L1 are displayed at this level.

Parameter	Explanation
Factor-Value	Power factor (cos (phi)) depending on the momentary load. This value can lie between "-1" (capacitive) and "1" (inductive).
Reactive-Value	Current reactive power value.
Apparent-Value	Current apparent power value.

Tab. 38: Displays at the "Power" level

"L1 Power" sub-level

Limits for the power of phase 1 are indicated at this level.

Parameter	Explanation
SetPtHigh-Alarm	Upper power limit; an alarm message is emitted if this is exceeded.
SetPtHigh-Warning	Upper power limit; a warning is emitted if this is exceeded.
SetPtLow-Warning	Lower power limit; a warning message is emitted if this is undercut.
SetPtLow-Alarm	Lower power limit; an alarm is emitted if this is undercut.
Hysteresis	Required percentage deviation for undercutting or exceeding the limit values for a status change (see section 15 "Glossary").

Tab. 39: Settings at the "L1 Power" level

Note:
If "0" is entered for all limit values at the "L1 Power" level, the status of the voltage is always "OK".

The following parameters are also displayed for power:

Parameter	Explanation
Value	Current power value.
Status	Current PDU status with respect to power.

Tab. 40: Displays at the "L1 Power" level

"Energy" level

Various power values of phase L1 are displayed at this level.

Parameter	Explanation
Active-Value	Total energy.

Tab. 41: Displays at the "Energy" level

Parameter	Explanation
Active Custom-Value	Energy since the last meter reset
Apparent-Value	Apparent energy.

Tab. 41: Displays at the "Energy" level

"Fuses"
For 32 A versions, various information about the power circuit-breakers is displayed at this level.

Parameter	Explanation
Type	Fuse type (hydraulic-magnetic protective circuit-breaker 16 A).
Status	Current status of the fuse.

Tab. 42: Display at the "Fuses" level

9.3.12 Phase L2 and phase L3

For PDU variants with 3-phase infeed, the same settings as for phase L1 can be implemented here for phases L2 and L3.

9.3.13 Sockets for the variants PDU managed

Note:
PDU managed represents a PDU variant that has all available functionality. Thus, the menu of a PDU managed is described below. For other PDU variants, some entries may be missing in the menu, because the associated functionality is not available for this variant.

Settings for the individual sockets are made at sub-levels below the "Sockets" level.

"General" level
Below the "Sockets" level, the following parameter can be set at the "General" level:

Parameter	Explanation
Power On Delay Multiplier	All configured time delays are multiplied with the Power on Delay Multiplier. Value between 1 and 99 (default = 1).

Tab. 43: Settings at the "General" level

"Socket01" level
Settings for the first socket are made at sub-levels below the "Socket01" level.

"General" sub-level
General settings for the socket are made at this level.

Parameter	Explanation
Relay	Select a switching command for the socket. Off On Off 10 s Off 30 s Off 60 s
Power on Delay	Select the ON delay in the range between "0 and 300 seconds".
Sequence Mode	The Sequence Mode defines the behaviour of the relay in the event of power failure: "none": No effect on the switching behaviour of the relay. In the absence of power, the relay switches off; when power resumes, the relay switches on again after the delay time. "general off": Relay does not switch on when power resumes. "general on": Relay does not switch when power fails. When power resumes, it is applied immediately at the socket.
Grouping	Group number to which the socket is assigned.

Tab. 44: Settings at the "General" level

If individual sockets are assigned to a joint group, all sockets in that group are switched together. This can be triggered via the website or via a task. It is irrelevant which socket in the group is switched.
Consequently, it is neither necessary to switch each of these outputs individually, nor must a separate task be created for every single one of these outputs.

Note:
Setting up the "Power on Delay" enables the sockets to be switched on sequentially after a power failure. However, a power supply to the PDU controller via PoE is required to switch on the sockets with a time delay.

The following parameters are also displayed for the socket at the "General" level:

Parameter	Explanation
Circuit	String or phase to which the socket is assigned.
Socket type	Type of connection socket.
Status	Current socket status.

Tab. 45: Displays at the "General" level

"Current" sub-level for the PDU managed variant
Limits for the socket current are indicated at this level.

EN

Parameter	Explanation
SetPtHigh-Alarm	Upper current limit; an alarm message is emitted if this is exceeded.
SetPtHigh-Warning	Upper current limit; a warning message is emitted if this is exceeded.
SetPtLow-Warning	Lower current limit; a warning message is emitted if this is undercut.
SetPtLow-Alarm	Lower current limit; an alarm message is emitted if this is undercut.
Hysteresis	Required percentage deviation for undercutting or exceeding the limit values for a status change (see section 15 "Glossary").

Tab. 46: Settings at the "Current" level

Note:
If "0" is entered for all limit values at the "Current" level, the status of the current is always "OK".

The following parameters are also displayed for the current:

Parameter	Explanation
Value	Current value of current.
Status	Current socket status with respect to current.

Tab. 47: Displays at the "Current" level

"Power" sub-level for the PDU managed variant

Settings for the socket power are made at sub-levels below the "Power" level.

Various power values of Socket 01 are also displayed at this level.

Parameter	Explanation
Factor-Value	Power factor (cos (phi)) depending on the momentary load. This value can lie between "-1" (capacitive) and "1" (inductive).
Reactive-Value	Current reactive power value.
Apparent-Value	Current apparent power value.

Tab. 48: Displays at the "Power" level

"Socket01 Power (Active)" sub-level for the PDU managed variant

Limits for the socket power are indicated at this level.

Parameter	Explanation
SetPtHigh-Alarm	Upper power limit; an alarm message is emitted if this is exceeded.
SetPtHigh-Warning	Upper power limit; a warning is emitted if this is exceeded.
SetPtLow-Warning	Lower power limit; a warning message is emitted if this is undercut.
SetPtLow-Alarm	Lower power limit; an alarm is emitted if this is undercut.
Hysteresis	Required percentage deviation for undercutting or exceeding the limit values for a status change (see section 15 "Glossary").

Tab. 49: Settings at the "Socket01 Power" sub-level

Note:
If "0" is entered for all limit values at the "Power" level, the status of the power is always "OK".

The following parameters are also displayed for power:

Parameter	Explanation
Value	Current power value.
Status	Current PDU status with respect to power.

Tab. 50: Displays at the "Socket01 Power" sub-level

"Energy" sub-level for the PDU managed variant

Various energy values of Socket 01 are displayed at this level.

Parameter	Explanation
Active-Value	Total energy.
Active Custom-Value	Energy since the last meter reset.
Apparent-Value	Apparent energy.

Tab. 51: Displays at the "Energy" sub-level

"Socket 02" etc. levels for the variants PDU managed

The same settings as for socket 1 may be implemented at these levels for the other sockets, depending on the PDU variant (see section 9.3.13 "Sockets for the variants PDU managed").

9.3.14 RCM

For PDU with integrated differential-current measurement (RCM), depending on the variant, as many as six measuring modules are listed. The following is displayed for each module:

"Residual Current 01 (General)" level

The following values for the total differential current are displayed at this level:

Parameter	Explanation
Position	Position of the differential-current measurement (e.g. L1_F1 fuse).
Command	Start of the RCM module self-test.
Result	Returned result of the self-test.
Status	Current status of the total differential-current measurement.

Tab. 52: Displays at the "Residual Current 01 (General)" level

"RCM AC 1 (AC)" level

The following values for the alternating-current component of the differential-current measurement are displayed at this level:

Parameter	Explanation
Value	Display of the measured value.
SetPtHigh-Alarm	Upper current limit; an alarm message is emitted when exceeded.
SetPtHigh-Warning	Upper limit of the alternating-current component; a warning message is emitted when exceeded.
Hysteresis	Required percentage deviation when undershooting the limit values for a status change (see section 15 "Glossary").
Status	Current status of the alternating-current component of the differential-current measurement.

Tab. 53: Displays at the "RCM AC 1 (AC)" level

"RCM DC 1 (DC)" level

The following values for the direct-current component of the differential-current measurement are displayed at this level:

Parameter	Explanation
Value	Display of the measured value.
SetPtHigh-Alarm	Upper limit of the direct-current component; an alarm message is emitted when exceeded.
SetPtHigh-Warning	Upper limit of the direct-current component; a warning message is emitted when exceeded.
Hysteresis	Required percentage deviation when undershooting the limit values for a status change (see section 15 "Glossary").

Tab. 54: Displays at the "RCM DC 1 (DC)" level

Parameter	Explanation
Status	Current status of the direct-current component of the differential-current measurement.

Tab. 54: Displays at the "RCM DC 1 (DC)" level

9.3.15 Fuses

For the 32 A versions of PDU metered+ and PDU managed, the totals of current and power for each power circuit-breaker are displayed. Depending on the version, up to six power circuit-breakers are listed ("Fuse L1_F1" to "Fuse L3_F2" levels).

The displayed values are the summed measured values of the corresponding output slots (there is no measurement accuracy).

"Fuse L1_F1" level (exemplary for the levels of each power circuit-breaker)

The values for the current and the power are displayed in this level. The following values are displayed in each case:

Parameter	Explanation
Value	Display of the measured value.
SetPtHigh-Alarm	Upper limit of the current value / power value; an alarm message is output if this is exceeded.
SetPtHigh-Warning	Upper limit of the current value / power value; a warning message is output if this is exceeded.
Hysteresis	Required percentage deviation when undershooting the limit values for a status change (see section 15 "Glossary").
Status	Actual status of the current value / power value for the power circuit-breaker.

Tab. 55: Displays at the "Current Fuse L1_F1"/ "Power L1_F1" sub-level

9.4 Configuration index tab

The content of the **Configuration** tab depends on which component was selected in the navigation area.

If the complete "Processing Unit" system (top node) has been selected, the following configuration options are available:

- **Network** group box
  - TCP/IP
  - SNMP
  - HTTP
  - Filetransfer
  - Console
  - SMTP
  - SMS
  - Modbus/TCP

EN

- Server shutdown
- OPC-UA
- REST-API

■ **System** group box
- Syslog
- Units and Languages
- Details
- Date/Time
- General
- Display
- Firmware Update
- Import/Export settings
- Webcam
- Mobile
- Certificates

■ **Security** group box
- Groups
- Users
- LDAP
- RADIUS

These configuration options are described in detail in sections 9.5 "Network" to 9.7 "Security".
When a lower-level Real Device is selected, such as the "PDU-Controller" device, the following configuration options are available:
- Alarm Configuration
- Device Rights Configuration

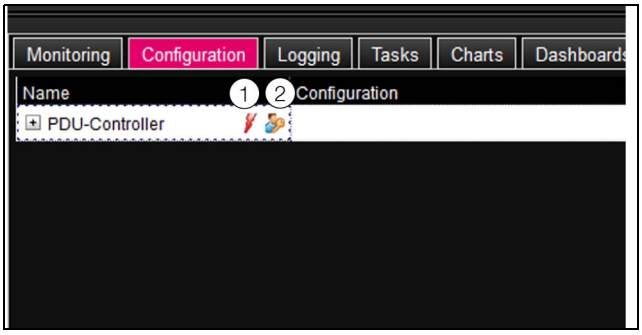

Fig. 62: Editable parameter with "Edit" symbol

Key
1 "Alarm Configuration" symbol
2 "Device Rights Configuration" symbol

These configuration options are described in detail in sections 9.9 "Alarm Configuration" and 9.8 "Device Rights".
If the complete system "Processing Unit" has been selected, the operator may display (left button fig. 63, item 1) or print (right button fig. 63, item 2) a summary of the current settings using the two buttons in the top section of the **Configuration** index tab.

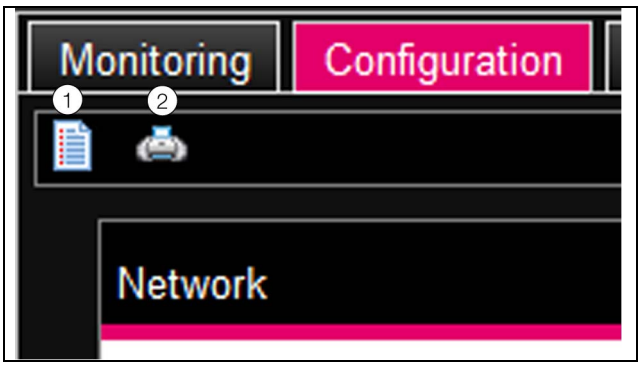

Fig. 63: Summary of current settings

Key
1 Display
2 Print

9.5 Network

9.5.1 TCP/IP configuration

Basic network settings for the TCP/IP protocol are made in the "TCP/IP configuration" dialogue; settings are made separately for IPv4 and IPv6.

Parameter	Explanation
IP address	IP address of PDU.
Netmask	IP subnet mask.
Gateway	IP address of router.
DHCP Mode	Activate ("DHCPv4" entry) or deactivate ("Manual" entry) DHCP for the automatic assignment of an IP address for a server. If the DHCP is activated, no further inputs can be performed in this group box.
MAC Address	Display of the network adaptor hardware address.

Tab. 56: IPv4 Configuration group box

Parameter	Explanation
Enable	Activate or deactivate the IPv6 protocol.
IP address 1	First IPv6 address of PDU.
IP address 2	Second IPv6 address of PDU.
Auto	Displays an IPv6 address obtained automatically from the network.
Link Local	Displays the permanently assigned Link Local address of the PDU.

Tab. 57: IPv6 Configuration group box

Parameter	Explanation
DHCP Mode	Basic settings for IPv6. "Manual": Manual specification of the IPv6 addresses. "Stateless Auto Configuration": Activate the Autoconfiguration (in Linux networks). "DHCPv6": The address is assigned via DHCPv6 (in Windows networks).

Tab. 57: IPv6 Configuration group box

In addition to the PDU basic network settings, the address of up two DNS servers can be entered in the **DNS Configuration** and **DNSv6 Configuration for the associated IP protocol** group boxes for name resolution.

Parameter	Explanation
Name Server	IP address of a server for name resolution of server 1 and server 2.
DNS-Mode	Activate ("Automatic" entry) or deactivate ("Manual" entry) DHCP for the automatic assignment of an IP address by the DHCP server. If DHCP is activated, no further inputs can be made in this group box. In this case, however, IPv4 or IPv6 DHCP must be activated for the associated protocol.
Hostname	**Only for the IPv4 protocol:** DNS name of PDU. If a DNS server is used for name resolution, the PDU can also be accessed using its name rather than the IP address.

Tab. 58: DNS Configuration group box

9.5.2 SNMP Configuration

The "SNMP Configuration" dialogue is used to make basic settings for the SNMP protocol.

SNMP is disabled by default.

When making settings for the SNMP protocol, please observe the following:

- The MIB for the PDU is a dynamically generated MIB, which may also change if changes are made to the sensor configuration.
- If the PDU is incorporated into an infrastructure management system via the MIB, only the variable name may be used to identify the variables. Identification via the ObjectID is not recommended.

Note:
The current status of the "OID_List.cmc3" MIB file can be saved from the PDU onto a local PC via FTP access from the "download" folder (see section 10.4 "Saving additional information locally").

All trap receivers are entered in the **Traps** group box and are generally enabled for sending.

Note:
- All trap receivers that are not enabled in this group box ("Use" column) will not receive any traps, even if enabled in the Alarm Configuration.
- All trap receivers that are activated in this group box must additionally be activated in the Alarm Configuration (see section 9.9.3 "Trap Receivers").

Parameter	Explanation
Enable Authentica-tion Trap	Enable or disable the Authentication Trap. Send a trap for query by an unknown community name.
Trap Receivers	Up to 16 IP addresses as possible receivers of trap messages.
Use	The following protocols can be specified: SNMPv1 Trap, SNMPv2C Trap, SNMPv2C Inform, SNMPv3 Trap.

Tab. 59: Traps group box

The **Allowed Hosts** group box can be used to define special host addresses that are able to make contact with the PDU via SNMP.

Parameter	Explanation
Host	Up to 12 IP addresses as possible hosts that can make contact with the PDU. If **no** IP address is entered here, **all** hosts in the network can make contact.
Use	Enable or disable individual hosts.

Tab. 60: Allowed Hosts group box

Note:
Once a host has been entered in the **Allowed Hosts** group box, any other host that is not entered there will no longer be able to query values via the SNMP protocol.

In the **SNMPv1/v2c** group box, you can define special requirements for the SNMP protocol in versions1 and 2c.

Parameter	Explanation
Enable	Enable or disable SNMPv1 and SNMPv2c.
Read Community	Name of the community that has read access to the PDU.
Write Community	Name of the community that has write access to the PDU.

Tab. 61: SNMPv1/v2c group box

EN

Parameter	Explanation
Trap Community	Name of the community with the trap receivers. Trap messages can be sent only to members of this community.

Tab. 61: SNMPv1/v2c group box

In the **SNMPv3** group box, you can define special requirements for the SNMP protocol in version 3.

Parameter	Explanation
Enable	Enable or disable SNMPv3.
Authentication	Selection of the authentication method.
Privacy	Selection of encryption (None, DES or AES).
SNMPv3 Username	User name for access via SNMP.
SNMPv3 Password	Associated password for access via SNMP. The password must contain at least eight characters.

Tab. 62: SNMPv3 group box

9.5.3 HTTP Configuration

All settings for HTTP access to the PDU are made in the "HTTP Configuration" dialogue, subdivided into standard access **without** SSL and secure access **with** SSL.

It is also possible to specify separately for each user whether or not that user has HTTP access to the PDU (see section 9.7.2 "Users").

Parameter	Explanation
Port	Web server port in the PDU.
Enable	Enable or disable access via the HTTP protocol.

Tab. 63: Standard Access (without SSL) group box

Parameter	Explanation
SSL Port	Secure Web server port in the PDU.
Enable	Enable or disable access via the HTTP protocol.
Security Level	Selection of TLS version (Modern or Intermediate).

Tab. 64: Secure Access (with SSL) group box

Note:
It is not possible to disable both forms of access, i.e. with and without SSL, from the Web user interface. This is only possible via a Telnet connection.

9.5.4 File transfer configuration

All settings for access to the PDU via FTP are made in the "File Transfer Configuration" dialogue (see section 10 "Updates and data backup").

It is also possible to specify separately for each user whether or not that user has FTP access to the PDU (see section 9.7.2 "Users").

Parameter	Explanation
Port	FTP server port in the PDU.
Enable FTP Server	Enable or disable access via the FTP protocol.
Port	SFTP server port in the PDU.
Enable FTP Server	Display access via the SFTP protocol. To ensure access to the PDU at all times, this access cannot be deactivated.

Tab. 65: "File Transfer Configuration" dialogue

9.5.5 Console

All settings for access via Telnet and SSH (Secure Shell) are made via the "Console Configuration" dialogue (see section 7.3 "Telnet/SSH connection").

It is also possible to specify separately for each user whether or not that user has access to the PDU via Telnet or SSH (see section 9.7.2 "Users").

Parameter	Explanation
Port	Port for access to the PDU via Secure Shell (SSH).
Enable	Enable or disable access via Secure Shell.

Tab. 66: SSH group box

Parameter	Explanation
Port	Port for access to the PDU via Telnet.
Enable	Enable or disable access via Telnet.

Tab. 67: Telnet group box

9.5.6 SMTP Configuration

The "SMTP Configuration" dialogue is used to make the basic settings for sending e-mails.

All settings for the mail server are specified in the **Server Parameters** group box so that the PDU can send an appropriate e-mail when alarms are pending.

Parameter	Explanation
Server	IP address or name of mail server used to send e-mails.
Port	Port of the mail server.

Tab. 68: Server Parameters group box

Parameter	Explanation
Authentication	Enable or disable authentication on the mail server.
Username	User name for login to the mail server.
Password	Associated password for login to the mail server.
Sender Address	E-mail address of the PDU (sender address).
Reply to Address	Reply address when a receiver answers an e-mail from the PDU.

Tab. 68: Server Parameters group box

All receivers of e-mail messages are entered and generally enabled for sending in the **Email** group box.

Note:
- All e-mail receivers that are not enabled in this group box ("Use" column) do not receive any e-mails, even if enabled in the Alarm Configuration.
- All e-mail receivers that are activated in this group box must additionally be activated in the Alarm Configuration (see section 9.9.2 "E-mail Receivers").

Parameter	Explanation
Email Address	A maximum of 16 e-mail addresses as possible receivers of e-mails from the PDU.
Use	Enable or disable individual receivers.
Send device message	Send an e-mail when the device structure changes (e.g. a sensor is removed).

Tab. 69: Email group box

9.5.7 SMS Configuration

The "SMS Configuration" dialogue is used to make the basic settings for sending SMS messages.
All settings for sending via a GSM unit (DK 7030.570) or an LTE unit (DK 7030.571) are made in the **Service Parameters** group box.

Parameter	Explanation
SIM-Pin	Four-digit PIN of the general SIM card.
Service Number	SMS service number of the provider (depending on the selected SIM card / provider). For example, Deutsche Telekom D1: +491710760000

Tab. 70: Service Parameters group box

Parameter	Explanation
ISDN MSN	Set the MSN number of the ISDN connection. The number must be entered in the following format: +49/2772/123456
ISDN Pre-Dial Number	Phone number to obtain an outside line. This is necessary when the ISDN unit is connected to a phone system.
ISDN Command	An SMS must be sent once to register with the network operator. For example, Deutsche Telekom D1: "888 ANMELD"

Tab. 70: Service Parameters group box

All receivers of SMS messages are entered and generally enabled for sending in the **Known Receivers** group box.

Note:
- All SMS receivers that are not enabled in this group box ("Use" column) cannot receive SMS messages, even if enabled in the Alarm Configuration.
- All text message receivers that are enabled in this group box must also be enabled in the Alarm Configuration (see section 9.9.4 "SMS Receivers").

Five IP addresses can be entered in the **Allowed Trap Senders** group box whose SNMP traps can be forwarded via SMS.

9.5.8 Modbus/TCP Configuration

Note:
- The PDU supports only the "Modbus/TCP" Modbus protocol.
- A list of all variables that can be queried via Modbus can be fetched as the "ModbusMap.cmc3" file via an FTP access from the "download/docs" folder of the PDU and stored on a local PC (see section 10.4 "Saving additional information locally").

The "Modbus/TCP Configuration" dialogue is used to make the basic settings for the Modbus/TCP protocol.
The following settings are made in the **Service Parameters** group box.

Parameter	Explanation
Enable	Enable or disable access via the Modbus/TCP protocol.
Port	Modbus server port in the PDU. Port 502 is set as the default.

Tab. 71: Service Parameters group box

EN

Parameter	Explanation
Modbus Table Download	Download the current Modbus map.

Tab. 71: Service Parameters group box

The special host addresses specified in the **Allowed Hosts** group box can be used to establish the connection to the PDU via the Modbus/TCP protocol.

Parameter	Explanation
Host	Up to 12 IP addresses or names of possible hosts that can make contact to the PDU. If **no** host is entered here, **all** hosts in the network can make the connection.
Access Rights	Authorisation of the associated host for access via Modbus/TCP. Possible settings are read-only access ("read" setting) or read and write access ("read/write" setting). If access via Modbus/TCP is generally disabled, this setting has no effect.

Tab. 72: Allowed Hosts group box

Note:
Once a host has been entered in the **Allowed Hosts** group box, any other host not entered there can no longer query values via the Modbus protocol.

9.5.9 Server Shutdown Configuration

Basic settings for the regulated shutdown of servers via a task are made in the "Server Shutdown Configuration" dialogue (see section 9.11.3 "Selecting an action"). For this purpose, an RCCMD software licence (7857.421) must be installed on each of these servers.

Parameter	Explanation
Name	Name of server.
IP Address	IP address or name of server to be shut down.
Port	Port on which the server receives the RCCMD signal. Port 6003 is set as default.
Delay	Amount of time for which the alarm must be active in order to launch the shutdown of the respective server.
Use	Enable or disable individual servers.

Tab. 73: Servers group box

Note:
- All servers that are not enabled in this group box ("Use" column) will not be shut down even if enabled in a task.
- All servers that are enabled in this dialogue must additionally be enabled in the respective task (see section 9.11.3 "Selecting an action").

9.5.10 OPC-UA Configuration

The OPC-UA protocol is a network management protocol that can be used in control room technology. This protocol allows data from the PDU and from the connected sensors to be requested from the **Monitoring** tab. It does not, however, provide any access to the **Configuration**, **Logging** and **Tasks** tabs.
The "OPC-UA Configuration" dialogue is used to make the basic settings for this communications protocol.

Parameter	Explanation
Enable	Enable or disable access via the OPC-UA protocol.
Port	Port of the OPC-UA server in the PDU. Port 4840 is set as the default.
Security	Selection of security (None or User/Password).

Tab. 74: "OPC-UA Configuration" dialogue

9.5.11 Redfish API service

Optionally, the "Redfish API" functionality can be used to control and monitor the PDU.
The PDU supports Rest API functionality based on the DMTF Redfish standard.

This function is deactivated as standard.
Details of the power components can be fetched when activating Redfish services:
- Configuration details such as threshold values, names.
- Measured values

In addition, switching operations of slots can be performed.

■ To activate the "Redfish API" functionality, click the appropriate link on the PDU web interface.

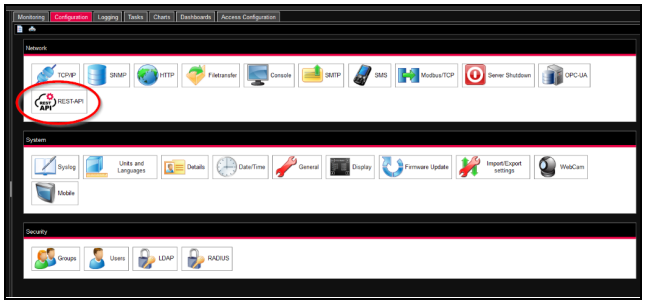

Fig. 64: PDU web interface – link to Rest API

- Then activate the service using the "Enable" check-box.
  The values in the "Port" and "Entry Point" fields are fixed and cannot be changed.

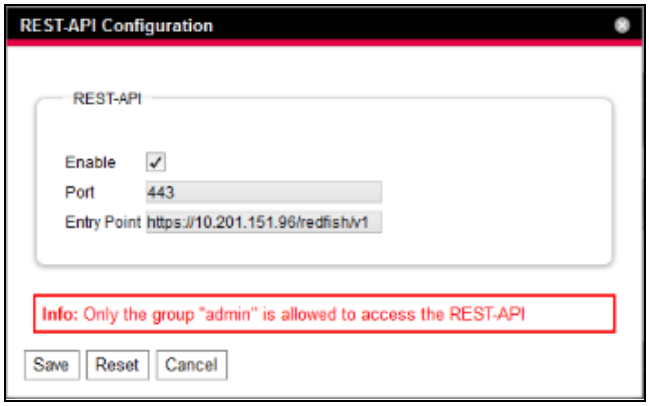

Fig. 65: Rest-API configuration

- Save the settings by clicking "Save". The Rest API functionality is then available on the PDU.

Note:
A comprehensive documentation of the Redfish API functionality can be downloaded from the DMTF Redfish web site. The associated link is:
https://www.dmtf.org/standards/redfish
In addition, the documentation as an "Openapi" description can be found on the device at "{IP}/redfish/v1/openapi.yaml".

9.6 System

9.6.1 Syslog

The "Syslog Configuration" dialogue is used to make the basic settings for sending log messages to the Syslog server.

Parameter	Explanation
Enable Syslog	Syslog can generally be enabled here and the protocol used can be specified. If TCP is used, TLS can also be enabled.
Server 1	The IP address of a server to which the alarm and event logs are sent.
Server 2	The IP address of a second server to which the alarm and event logs are sent.
Port	Port of the Syslog server. Port 514 is set as the default.
Facility	A digit between 0 and 7 (inclusive) used to specify the priority of the sent log.

Tab. 75: "Syslog Configuration" dialogue

9.6.2 Units and Languages

In the "Units and Language Configuration" dialogue, the **Units** group box can be used to toggle between the units "Celsius" and "Fahrenheit" for all temperature values.

Parameter	Explanation
Temperature format	Select the desired temperature unit ("Celsius" or "Fahrenheit").

Tab. 76: Units group box

- After changing the unit, check all temperature setting values (e.g. from a connected temperature sensor).

The language for the PDU website can be selected in the **Language** group box.

- Select the required language, e.g. German, from the dropdown list.
- Next, log off from the PDU website (see section 9.2.8 "Logging off and changing the password") then log in again.

The names of the levels and parameters will continue to be displayed in English after changing the language. However, tool tips can be displayed in your chosen language.

- Hover the mouse over the **Monitoring** tab e.g. on the entry for the "Device" level underneath the main "Master PDU" level.
  A tool tip with the German translation of "Device" ("Gerät") will appear.

9.6.3 Details

The "Details Configuration" dialogue displays detailed information about the PDU. Specific parameters can be customised to differentiate between multiple installations.

Parameter	Explanation
Name	Name of PDU (for more precise identification).
Location	Installation location of PDU (for more precise identification).
Contact	Contact address, typically an e-mail address.

Tab. 77: "Details Configuration" dialogue

EN

Parameter	Explanation
Hardware Revision	Display of the PDU hardware version.
Software Revision	Display of the PDU software version.
Serial Number	Display of PDU serial number.

Tab. 77: "Details Configuration" dialogue

9.6.4 Date/Time

The "Date and Time Configuration" dialogue is used to change the system date and time of the PDU.

Parameter	Explanation
Time Zone	Selection of the time zone. The time zone is required when an NTP server is used.

Tab. 78: Time Zone group box

Parameter	Explanation
Time	Current time.
Date	Current date.

Tab. 79: Date/Time group box

Note:
Changing the system date or system time can lead to the loss of chart data (see section 9.12 "Charts").

The Network Time Protocol can be enabled in the **NTP** group box. The associated NTP server can also be defined here. These settings can be used to synchronise the local date and time setting of the PDU with a server.

Parameter	Explanation
Use NTP	Enable or disable the NTP function for the time and date synchronisation with an NTP server.
NTP Server 1	IP address or name of the primary NTP server.
NTP Server 2	IP address or name of the secondary NTP server.

Tab. 80: NTP group box

9.6.5 General

Basic settings for the PDU are made in the "General Configuration" dialogue.

Parameter	Explanation
Enable Beeper	Enable or disable the beeper installed in the PDU.

Tab. 81: "Beeper group box" dialogue

Note:
An integrated beeper disabled here cannot be enabled in the Alarm Configuration for individual alarm messages.

The basic settings for the alarm relay are specified in the **Alarm Relay** group box.

Parameter	Explanation
Alarm Relay Behavior	Behaviour of the alarm relay on occurrence of an alarm. Possible settings are open the contact ("Open on Alarm" setting) or close the contact ("Close on Alarm" setting). Alternatively, the complete alarm relay can be disabled ("Disabled" setting). If the alarm relay is disabled, this relay contact, like every other variable, can be set manually via the website, SNMP or tasks.
Switch on	Trigger the alarm relay only for warnings, only for alarms or for warnings and alarms.
Quit Alarm Relay	Switch back the alarm relay only after an alarm has been confirmed.
Switch on Device Errors	Enable or disable the alarm relay when configuration changes are made to the PDU

Tab. 82: Alarm Relay group box

Note:
An alarm relay disabled here cannot be enabled in the Alarm Configuration for individual alarm messages.

9.6.6 Display

The PIN for access to the **Setup** configuration menu may be set in the "Display Configuration" dialogue on the PDU display.

Parameter	Explanation
Set new display PIN	Enter the new PIN. This must contain exactly four digits.

Tab. 83: "Display Configuration" dialogue

9.6.7 Firmware Update

Note:
Observe the instructions for performing an update in section 10.2 "Performing an update".

Note:
Security-related adaptations have been made with the introduction of software version V10.1.xxx. These adaptations mean a downgrade to software versions less than V10.1.xxx is not supported. Consequently, once an update has been installed, the software cannot be rolled back to an earlier version release.

The PDU can be updated directly via the website in the "Firmware Update" dialogue. Alternatively, this can also be achieved with a USB storage medium (see section 10.2.3 "Update via USB") or via an (S)FTP connection (see section 10.2.4 "Update via FTP or SFTP").

Note:
To ensure the update process is successful, the transfer of the update file must not be hindered by firewalls or other security measures. Blocked data packets can result in a corrupted update file and, consequently, a failed update.

- Click the "Disk" symbol in the "Firmware Update" dialogue.
- Navigate through the file selection dialogue to the new firmware file ending in "tar" which you need to install, and select it.
  The file name is displayed in the dialogue.
- Click the **Start Update** button.

The update process starts automatically after a few seconds. This is indicated by red flashing of the multi-LED on the PDU (so-called heartbeat, alternately long and short).

- Click the **Show Details** button.
  The **Information** group box displays further information about the current firmware version and logged-in users.
  Selecting a specific firmware version in the drop-down list displays information about the associated update in the **Update Log** group box.

9.6.8 Import/Export settings

The settings in this dialogue allow PDU settings to be exchanged quickly and easily with other PDUs. The exported file can also be edited before being imported to another PDU to change the configuration. The Export function can also be used for data backup.

- Click the "Download" button in the "Import/Export Settings" dialogue.
  Depending on the Browser settings, the file is saved by default with name "settings.txt" in the Download folder.
- Click the "Diskettes" symbol in the "Upload setting" group box on another PDU that should be configured similarly. The "Upload File" dialogue opens in which the previously saved file can be selected.

Note:
The file selected for upload must have name "settings.txt", otherwise the upload is not started.

9.6.9 WebCam

The access to a webcam from Axis available in the network can be configured in the "WebCam Configuration" dialogue (VAPIX version 3). The webcam allows a live stream from the web user interface to be viewed or individual images for each task to be recorded or saved (see section 9.3.7 "Webcam").

Note:
A live stream **cannot** be viewed with Internet Explorer. To view the live stream with Opera Browser, webcam password protection must be revoked.

The basic settings for the webcam are made in the **Network** group box.

Parameter	Explanation
Enable	Enable or disable access to the webcam.
Host	IP address or host name of the webcam.
Username	User name for access to the webcam.
Password	Associated password for access to the webcam.

Tab. 84: Network group box

The settings for creating individual images are made in the **Snapshot** group box.

Parameter	Explanation
Interval	The interval in seconds between two images.
Number of Images	Total number of images created when a trigger is initiated.
Destination	Selection of the external storage medium on which the images are stored.

Tab. 85: Snapshot group box

EN

Note:
A trigger for creating the individual images can, for example, be initiated via tasks or manually via the website.

9.6.10 Mobile

The representation (dashboard) displayed on a mobile terminal is specified in the **Mobile Phone** group box in the "Display Configuration" dialogue (see section 9.13 "Dashboards").

Parameter	Explanation
Dashboard	Selection of the dashboard displayed for the login with a mobile terminal.

Tab. 86: Mobile Phone group box

The representation of a dashboard on a mobile terminal normally differs from the configured representation. The title lines of the individual components of the dashboard are initially displayed stacked on a mobile terminal. Clicking a title line displays the associated content of the component (e.g. a variable list).

Note:
Before selecting a dashboard for a mobile terminal, ensure that the dashboard has been configured appropriately.

9.6.11 Certificates

The certificates used for sending emails can be uploaded in the **Certificate Management** dialogue.
The following certificates can be used:
– File types: .pem, .crt, .cer, .cert
– Maximum length of the name: 64 characters

Click the "Diskettes" symbol to load a certificate to the PDU.
- Select the desired certificate in Windows navigation.
- Click the **Upload Certificate** button to confirm the upload.

The "Installed Certificates" overview displays all stored certificates, along with the issuers and expiry dates.
- To delete a certificate: Select the certificate to be deleted in the overview and click the **Delete Selected** button.

9.7 Security

All basic settings for user groups and individual users are specified in the **Security** box frame. These settings can be changed for individual components. If the "default" standard setting is used for the individual components, the values specified here are used.

9.7.1 Groups

Up to 32 different user groups can be defined in the "Groups Configuration" dialogue. 33 users may be created and assigned to these groups in the "Users" dialogue (see section 9.7.2 "Users").

Parameter	Explanation
Name	Name of user group.
Description	(Detailed) description of user group.
Initial Data Rights	User group authorisation regarding the device's parameters of the type "Data" (see section 9.8.2 "Data types"). Possible settings are no rights ("no" setting), read rights only ("read" setting) and change the limit values ("read/write" setting).
Initial Config Rights	User group authorisation regarding the device's parameters of the type "Config" (see section 9.8.2 "Data types"). Possible settings are no configuration rights ("no" setting), configuration parameters can only be read ("read" setting) and parameters can be changed ("read/write" setting). The authorisations set here are automatically transferred to newly registered devices.
Admin	Show or hide the **Configuration** and **Tasks** tabs. Here too, the general information about the sensors under the "Device" point may only be edited as an administrator.
Auto Logout [sec]	The time after which a user from this group is automatically logged out from the PDU in case of inactivity. Where the set value is "0", there is no automatic logoff for that user.

Tab. 87: "Groups Configuration" dialogue

Note:
The duration specified for the "Auto Logout" parameter does not apply when a user logs in directly to a dashboard.
The user remains logged in to the PDU while the dashboard is open.

We recommend using the setting in the "admin" column for restricted user groups to prevent access to the **Configuration** tab (box unchecked). If this is not done, there is a possibility that users could reassign their own rights.

Note:
The "admin" group cannot generally be changed.

9.7.2 Users

Up to 33 different users can be defined in the "Users Configuration" dialogue.

Parameter	Explanation
Enabled	Enable or disable a user.
User	User name for login to the PDU.
Group	User group to which the user belongs.
File Transfer	User authorisation for access via FTP. Possible settings are no access ("no" setting), read-only access ("read" setting) or read and write access ("read/write" setting). If access via FTP is generally disabled (see section 9.5.4 "File transfer configuration"), this setting has no effect.
HTTP	User authorisation for access via HTTP. If the checkbox is activated, access via HTTP is possible; if the checkbox is deactivated, access via HTTP is not possible. If access via HTTP(S) is generally disabled (see section 9.5.3 "HTTP Configuration"), this setting has no effect.
Console	User authorisation for access via Telnet or SSH. If the checkbox is activated, access via Telnet or SSH is possible; if the checkbox is deactivated, access via Telnet or SSH is not possible. If access via Telnet or SSH is generally disabled (see section 9.5.5 "Console"), this setting has no effect.

Tab. 88: "Users Configuration" dialogue

Note:
If the access type using a specific protocol is generally disabled, such access cannot be enabled for a single user.

Users with the appropriate access rights can use the **Set Password** button to (re)assign a one-time password for another user. This requires preselection of the desired user, otherwise the button is deactivated. After the first login, the user must then change their password (see section 7.2.3 "Changing the password after the first login").
In addition, users can change their own password after they have logged in (see section 9.2.8 "Logging off and changing the password").

9.7.3 LDAP Configuration

The "LDAP Configuration" dialogue can be used to take over user administration from an LDAP server. Even if access to an LDAP server is configured and activated, the user data is always first checked in the local user administration of the PDU when logging in. If the data is not found there, the LDAP server is then searched.
The basic settings for the LDAP server are specified in the **Server** group box.

Parameter	Explanation
Enable LDAP	Enable or disable access to the LDAP server.
Host name	The IP address or name of the LDAP server.
Protocol	Select whether an insecure or secure connection is used.
Base DN	Root directory where all objects to be used are stored.
Bind DN	Distinguished Name for login on the LDAP server.
Bind PW	Password for authentication on the LDAP server.

Tab. 89: Server group box

The settings for requesting the group box are specified in the **Search Filter** group box.

Parameter	Explanation
User Search Filter	Filter for requesting the user names on the LDAP server. The expression "(objectClass=user)" is stored as standard.
Group Search Filter	Filter for requesting the group names on the LDAP server. The expression "(objectClass=group)" is stored as standard.
User Base DN	Root directory in which the information for user administration is stored.
Group Base DN	Root directory in which the information for group administration is stored.
Recursive Search	If this checkbox is activated, subgroups ("nested groups") are also permitted. This, however, is not supported by all LDAP servers.

Tab. 90: Search Filter group box

The login names are assigned to the data in the LDAP server in the **Mapping** group box.

Parameter	Explanation
UId	Field that contains the login name of the user (e.g. "mail" or "sAMAccountName").
UIdNumber	Field with the unique User-ID. "objectSID:S-x-x-xx-xx…" must be specified at AD. The "objectSID" field can be viewed in the AD server.
GIdNumber	Field with the unique Group-ID. "objectSID:S-x-x-xx-xx…" must be specified at AD. The "objectSID" field can be viewed in the AD server.

Tab. 91: Mapping group box

EN

Whereas the users stored in the LDAP server need not necessarily exist in the local user administration of the PDU, the groups must be created locally. To avoid needing to use the same group names in the LDAP server and in the PDU, the associated names on the LDAP server can be assigned to the local group names of the PDU in the **Group Alias Configuration** group box.

Parameter	Explanation
Group Selection	Select how users are assigned to a group. "Manual": All users are assigned to a fixed group. "LDAP": Users are assigned a group via an alias list. "LDAP, Manual if no match": An initial attempt is made to assign the users to a group via an alias list. If this is not possible, the assignment is made to a fixed group.
Group Name	The name of the group in the PDU when users are assigned manually to a group.
File Transfer	User authorisation for access via FTP. Possible settings are no access ("no" setting), read-only access ("read" setting) or read and write access ("read/write" setting). If access via FTP is generally deactivated (see section 9.5.4 "File transfer configuration"), this setting has no effect.
HTTP	User authorisation for access via HTTP. If the checkbox is activated, access via HTTP is possible; if the checkbox is deactivated, access via HTTP is not possible. If access via HTTP(S) is generally deactivated (see section 9.5.3 "HTTP Configuration"), this setting has no effect.
Console	User authorisation for access via Telnet or SSH. If the checkbox is activated, access via Telnet or SSH is possible; if the checkbox is deactivated, access via Telnet or SSH is not possible. If access via Telnet or SSH is generally deactivated (see section 9.5.5 "Console"), this setting has no effect.

Tab. 92: Group Alias Configuration group box

9.7.4 Radius Configuration

The "Radius Configuration" dialogue performs the user administration for a Radius server. Even if access to a Radius server is configured and activated, the user data is always checked first in the local user administration of the PDU when logging in. If the data is not found there, the first Radius server and then the second Radius server are searched.

General settings for the Radius protocol are specified in the **General** group box.

Parameter	Explanation
Enable Radius	Enable or disable access to the Radius server.
Authentication Method	Deployed encryption method.

Tab. 93: General group box

The basic settings for two Radius servers are specified in the **Server** group box.

Parameter	Explanation
Hostname	The IP address or name of the Radius server.
Port	The port of the Radius server. Port 1812 is set as the default.
Secret	The password for authentication on the Radius server.

Tab. 94: Server group box

The rights for a user stored on the Radius server for login to the PDU are specified in the **Group Search** group box.

Parameter	Explanation
Group Selection	Assignment of the user to a group. "Manual": Each user is logged in with the user group selected in the "Group Name" field. "By Server Attribute": The user is logged in with the user group that is stored in the Radius server for the vendor-specific attribute "cmc-group". The special vendor number is "2606". This user group must also exist in the PDU.
Group Name	The selection of the associated user group for all users for login via a Radius server and a manual assignment to a user group ("Manual" setting).
File Transfer	User authorisation for access via FTP. Possible settings are no access ("no" setting), read-only access ("read" setting) or read and write access ("read/write" setting). If access via FTP is generally deactivated (see section 9.5.4 "File transfer configuration"), this setting has no effect.
HTTP	User authorisation for access via HTTP. If the checkbox is activated, access via HTTP is possible; if the checkbox is deactivated, access via HTTP is not possible. If access via HTTP(S) is generally deactivated (see section 9.5.3 "HTTP Configuration"), this setting has no effect.

Tab. 95: Group Search group box

Parameter	Explanation
Console	User authorisation for access via Telnet or SSH. If the checkbox is activated, access via Telnet or SSH is possible; if the checkbox is deactivated, access via Telnet or SSH is not possible. If access via Telnet or SSH is generally deactivated (see section 9.5.5 "Console"), this setting has no effect.

Tab. 95: Group Search group box

9.8 Device Rights

After selecting the "PDU-Controller" component from the "Real Devices" category in the navigation area, you can specify the access rights to components for individual user groups under the **Configuration** tab.

- Select the "PDU-Controller" entry in the navigation area.
- Select the **Configuration** tab in the right-hand area of the screen page.

The various parameters for the currently selected component are displayed in the list view of the **Configuration** index tab. Access rights to these parameters can be amended by the operator.

- Click on the Configure Device Rights" symbol (fig. 62) The "Device Rights Configuration" dialogue will appear (fig. 66).

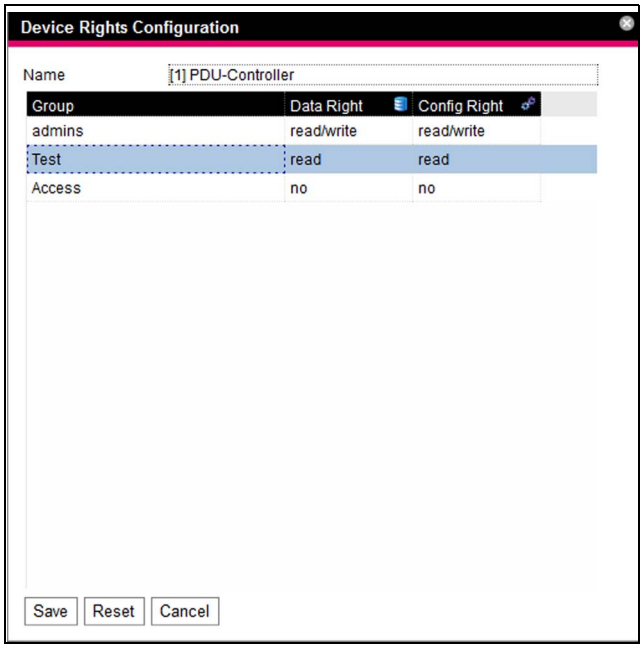

Fig. 66: "Device Rights Configuration" dialogue

The name of the device for which "Device Rights Configuration" is currently being implemented is shown above the table. The names of the user groups are shown in the "Group" column.

Parameter	Explanation
Group	Names of all user groups created previously (see section 9.7.1 "Groups").

Tab. 96: "Group" column

Access to the device's parameters of the type "Data" is defined under the **Monitoring** tab in the "Data Right" column. The assignment of parameters to the type "Data" is indicated by the "database" symbol preceding the respective parameter on the **Configuration** tab (see section 9.8.2 "Data types"). Here you can choose between the following settings:

Parameter	Explanation
no	Members of the group have neither read nor write access to parameters of the type "Data".
read	Members of the group have read access to parameters of the type "Data".
read/write	Members of the group have read and write access to parameters of the type "Data". This setting only takes effect if the software permits changes to parameters of the type "Data".

Tab. 97: "Data Right" column

Access to the device's parameters of the type "Config" is defined under the **Observation** tab in the "Config Right" column. The assignment of parameters to the type "Config" is indicated by the "gear" symbol preceding the respective parameter on the **Configuration** tab (see section 9.8.2 "Data types"). Here you can choose between the following settings:

Parameter	Explanation
no	Members of the group have neither read nor write access to the limit values. If the "no" entry is also selected in the "Data Right" column, only the "Device" level can be viewed. If some other entry is selected in the "Data Right" column, the "Value" and "Status" values can be viewed in the other levels.
read	Members of the group have read access to the limit values. This means they can view the voltage limit values for alarms and warnings, for example.
read/write	Members of the group have read and write access to the limit values. This means they can view and change the voltage limit values for alarms and warnings, for example.

Tab. 98: "Config Right" column

EN

If a field is unlabelled, the "Device Rights" at the level below this will vary (see section 9.8.1 "Inheriting Device Rights").

Note:
Generally speaking, access rights defined in this way only apply to the access to the associated component via the website.

9.8.1 Inheriting Device Rights

The allocation of rights for the individual sensors is structured in a parallel way to that shown on the **Monitoring** index tab. A change to one node will automatically be transferred to all variables beneath that node.

- Select the "PDU-Controller" entry in the navigation area.
- Select the **Configuration** tab in the right-hand area of the screen page.
- After the "PDU-Controller" entry, select the "Device Rights" symbol (fig. 62).
  The "Device Rights Configuration" dialogue will appear (fig. 66).

If changes are made in this dialogue and a user group is assigned a different access authorisation to the variables, that user group will have the same access rights for all variables beneath the "PDU-Controller" node.
If there is another node with different lower-level variables, the inheritance of access rights will apply here too. Any configuration changes are automatically transferred to the second node and the variables beneath it. On the other hand, if the second node is amended, the access rights will only change for all variables beneath that node.
If you wish to amend a single lower-level parameter, this can be selected and edited individually.

- Open the entire structure by clicking on the "plus" symbol.
- Select the "Device Rights" symbol immediately after the variable you wish to edit.

If the access rights to the individual parameters in the "Device Rights Configuration" dialogue differ for one node, at this point an empty box will be displayed in the "Device Rights Configuration" for the entire sensor. By editing this empty box, the setting made there will, in turn, be adopted for all lower-level parameters.

9.8.2 Data types

The sensor parameters are divided into two types:
– Data
– Config
A variable of the type "Data" supplies status information and can only be amended for those sensors whose software permits it. A variable of the type "Config" contains configuration information and can be amended by users if the software permits it.
The respective type is indicated by a symbol. Parameters of the type "Data" are indicated by a "database" symbol (with stacked blue cylinders). Parameters of the type "Config" are indicated by two diagonally arranged gear wheels.

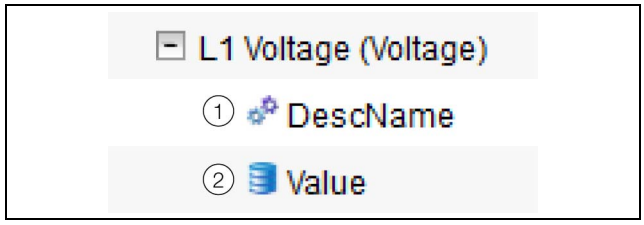

Fig. 67: Symbols for the data types

Key
1 "Gear wheel" symbol (data type "Config")
2 "Database" symbol (data type "Data")

The respective symbols are displayed both when selecting a sensor in the navigation area on the **Configuration** tab and opening it down to the lowest level, as well as in the "Device Rights Configuration" dialogue (fig. 66). The symbols illustrate allocation to the two data types "Data" and "Config".

9.9 Alarm Configuration

After selecting the "PDU-Controller" entry under "Real Device" or some other component under "Real Device", the alarm notification for each measured value may be specified individually on the **Configuration** tab.

- Select the "PDU-Controller" entry in the navigation area.
- Select the **Configuration** tab in the right-hand area of the screen page.
- Click on the "Configure All Alarms" symbol.
  The "Alarm Configuration" dialogue will open.

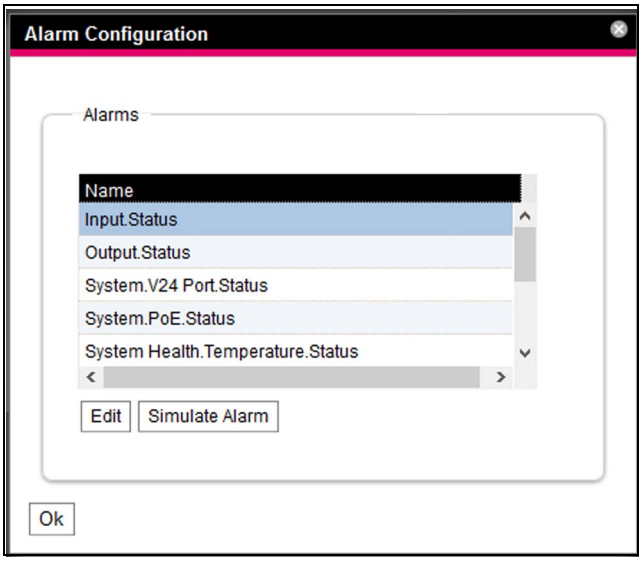

Fig. 68: "Alarm Configuration" dialogue

- In the list, click in the line of the PDU or sensor for which you want to specify the PDU's response.
- Click on **Edit**.
  For example, if the sensor for total power is selected, the "Alarm Configuration: Total.Power.Active.Status" dialogue will appear.

9.9.1 Notifications

You can make settings in the **Notifications** group box to specify the handling of active alarms.

Parameter	Explanation
Use Beeper	Enable or disable the beeper when an alarm occurs.
Use Relay	Enable or disable the alarm relay.
Acknowledge required	If this setting is enabled, the alarm message remains displayed until it has been acknowledged. This means even when the source of the alarm no longer applies, for example, the power has fallen back below the switching point, the "Alarm" status will remain. Only the transition to "OK" status is blocked, i.e. other alarms and the transition to "warning" status are displayed even when this setting has been enabled.
Delay	The delay time between a measured value being exceeded and the transition to alarm or warning status. This delay time does not apply to the transition to "OK" status.

Tab. 99: Notifications group box

Note:
If the integrated beeper or alarm relay is generally disabled, it cannot be enabled for individual alarm messages (see section 9.6.5 "General").

9.9.2 E-mail Receivers

Settings can be made in the **Email Receivers** group box to specify which receivers should be sent an e-mail when an alarm occurs.

All receivers that have been created correctly will be displayed here (see section 9.5.6 "SMTP Configuration"). These receivers are **deactivated** by default.

Parameter	Explanation
Email Address	The e-mail addresses that were created in the PDU configuration.
Use	Enable or disable the associated receiver.

Tab. 100: Email Receivers group box

Note:
If an e-mail receiver was generally disabled previously, it may be enabled for individual alarm messages, but e-mail messages will still not be sent to this receiver (see section 9.5.6 "SMTP Configuration").

9.9.3 Trap Receivers

You can make settings in the **Trap Receivers** group box to specify which receivers should be sent a trap message.

All receivers that have been created correctly will be displayed here (see section 9.5.2 "SNMP Configuration"). These receivers are **activated** by default.

Parameter	Explanation
Trap Host	The trap receivers that were created in the PDU configuration.
Use	Enable or disable the associated receiver.

Tab. 101: Trap Receivers group box

Note:
If a trap receiver was generally disabled previously, it may be enabled for individual alarm messages, but trap messages will still not be sent to this receiver (see section 9.5.2 "SNMP Configuration").

9.9.4 SMS Receivers

You can make settings in the **SMS Receivers** group box to specify which receivers should be sent an SMS message.

All receivers that have been created correctly are displayed here (see section 9.5.7 "SMS Configuration"). These receivers are **disabled** by default.

Parameter	Explanation
SMS Phone Number	The phone numbers stored in the PDU configuration.
Use	Enable or disable the associated receiver.

Tab. 102: SMS Receivers group box

Note:
If an SMS receiver was generally disabled previously, it may be enabled for individual alarm messages, but text messages are still not sent to this receiver (see section 9.5.7 "SMS Configuration").

9.9.5 Alarm simulation

After completion of an alarm configuration, the notifications set in the "Alarm Configuration" dialogue (fig. 68) can be checked. This is done by simulating a pending alarm, i.e. the alarm status is overwritten with the selected value for the specified duration.

- Click in the listing the line of the sensor or output for which you want to simulate the alarm behaviour.
- Click the **Simulate Alarm** button.
- You specify in this dialogue which type of alarm and for how long is to be simulated.

EN

Parameter	Explanation
Duration	The duration for which the alarm should be simulated.
Simulation Value	Selection of the status to be simulated. The possible values depend on the type of the selected sensor or output.

Tab. 103: "Simulate Alarm" dialogue

- Click the **OK** button to simulate the alarm and so check all settings (e.g. the correct sending of an e-mail to all stored receivers).

Note:
The "Alarm simulation" entry created in the log information allows the simulation to be differentiated from an actual alarm.

- After expiration of the duration for a simulated alarm, you can simulate further alarms similarly.

Note:
Only one alarm simulation can be active concurrently.

9.10 Logging

Log information about the PDU may be viewed on the **Logging** tab. Because this log information has general validity, the information displayed on the **Logging** tab is independent of the component selected in the left-hand area of the screen page.

Note:
The current status of the log file can be saved from the PDU onto a local PC via FTP access (see section 10.4 "Saving additional information locally").

- Select the **Logging** tab in the right-hand area of the screen page.

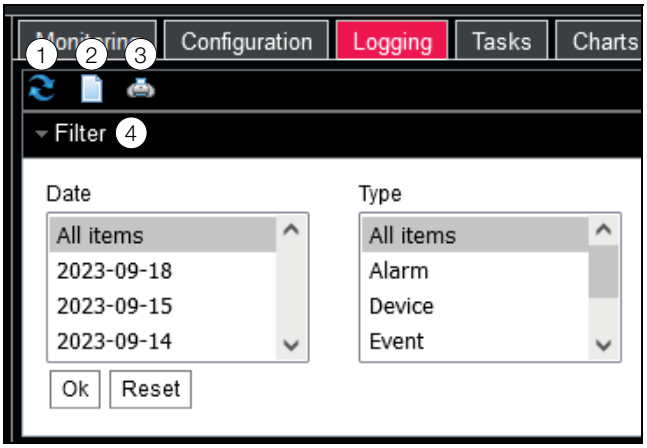

Fig. 69: Logging tab

Key
1 Reload the information
2 Clear the display
3 Print the display
4 Define a filter

Initially, a note is displayed stating that you can either
– define a filter to display only selected events
  or
– refresh the display to show a complete history of all events

The symbols in the toolbar below the tabs can be used for this purpose.

9.10.1 Defining a filter

You can define a filter to obtain only selected portions of all messages.

- Click on the first symbol on the left (fig. 69, item 4).
  The "Set Logging Filter" dialogue opens.

The following parameters are available:

Parameter	Explanation
Date	Messages from a specific date.
Type	Error type. For example, by selecting "Alarm", only alarm messages but no other messages from devices will be displayed.
Device Index	Messages for a specific device. The (internal) number of the device that was specified for the initial connection is selected.
User	Messages triggered by a specific user. For example, messages about when the user logged in or out are displayed.
IP Address	The messages that can be assigned to a specific IP address. All addresses from which the PDU was accessed are listed.

Tab. 104: Settings in the "Set Logging Filter" dialogue

"All Items" is the first entry in each column. If you select this entry, the entries of the associated column are **not** filtered.

Example: All information messages issued on 19.01.2012

- Select the above date "2012-01-19" in the "Date" column.
- Select the "Info" entry in the "Type" column.
- Select the "All items" entry in each of the following three columns.
- Click on **OK**.

The filter is applied and only those messages that satisfy the above criteria will appear in the list.

Note:
Multiple entries can be marked in the individual columns by clicking with the "Ctrl" key held down.

9.10.2 Refreshing the view

After defining a filter, all messages stored until this time that satisfy the filter criterion are displayed. There is no automatic refresh of the display when new messages arrive, i.e. the display must be refreshed manually.

- Click on the first symbol from the left (fig. 69, item 1).
  It takes a moment until all events have been reloaded from the PDU. The refreshed list with all events is then displayed.

Note:
After each refresh, only those messages that satisfy the currently specified filter criterion will be displayed.

9.10.3 Printing the display

The entire history, or events selected by a filter, may be printed.

- First define a suitable filter to only display a selected portion of all events (see section 9.10.1 "Defining a filter").
- Click on the third symbol from the left (fig. 69, item 4).
  Once again, it will take a moment until all events have been reloaded from the PDU. The refreshed list with all events is then displayed in a separate window, and a "Print" dialogue will open.
- Print the display, or if applicable, save it as a PDF file.

9.10.4 Clearing the display

You can clear the current display at any time.

- Click on the second symbol from the left (fig. 69, item 2).
  All entries are cleared from the display and the same note as when selecting the **Logging** tab will appear.

Note:
Only the entries in the display are cleared; the log file remains unchanged.

9.11 Tasks

Tasks can be used to poll and logically link the status of the PDU and all connected components. Additionally, date values may also be incorporated into the links. In the event of a status change to the trigger expression (see section 9.11.2 "Defining the trigger expression"), various actions may then be activated. For example, in the event of an alarm message on a certain day of the week, a corresponding e-mail may be sent. The current status of a task cannot be queried via SNMP.
Tasks have general validity. For this reason, the information displayed on the **Tasks** index tab is independent from the components selected in the left-hand section of the screen.

9.11.1 Tasks tab

The following information for as many as 32 different tasks is displayed on this tab:

Parameter	Explanation
ID	Unique ID of the task. This ID is defined by the system and cannot be changed.
Name	Name of task.
Description	(Detailed) description of the task.
Enabled	"Yes" or "No" display indicating whether the associated task is enabled, i.e. whether or not the assigned action is performed.

Tab. 105: Tasks tab

The settings for the individual tasks can be changed in the "Task Configuration" dialogue by clicking on **Edit**.

9.11.2 Defining the trigger expression

- Click on the **Edit** button of the task whose configuration you want to change or create.
  The "Task Configuration" dialogue opens.

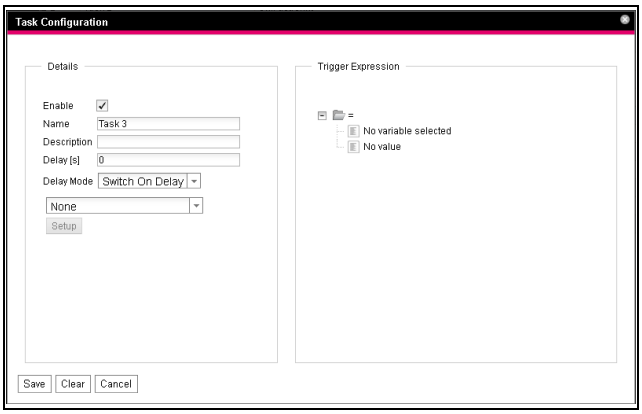

Fig. 70: "Task Configuration" dialogue

Details group box

Make the following settings in the left-hand **Details** group box:

Parameter	Explanation
Enable	Enable or disable the task.

Tab. 106: Details group box

EN

Parameter	Explanation
Name	Name of task.
Description	(Detailed) description of the task.
Delay	Delay time for a task in seconds. If the value "0" is entered here, no delay will occur, irrespective of the selected "Delay Mode".
Delay Mode	Type of delay
Dropdown list	Select an action to be performed when the associated expression is "true". Alternatively, a parameter value may be set.
Setup	Definition of the action to be performed.

Tab. 106: Details group box

Delaying a task

A task may additionally be controlled with a delay time. This delay time is defined via the parameter "Delay [s]" and may be selected individually between 0 and 9999 seconds.

The type of delay is configured via the dropdown list of the "Delay Mode" parameter.

Parameter	Explanation
Switch On Delay	ON delay. When the corresponding expression is "true", the system will first wait for the defined "Delay" time before executing the set action.
Switch Off Delay	OFF delay If the corresponding expression is "true", the set action is executed immediately. If a status subsequently changes and the expression becomes "false", the system will first wait for the defined "Delay" time before reversing the set action.
Pulse	Pulse. When the corresponding expression is "true", the system will first execute the set action over the duration of the defined "Delay" time. Once this period has expired, the action will be discontinued and reset to the original status.

Tab. 107: Selection list to delay a task

Note:
Generally speaking, the chosen action is only executed if the "Trigger Expression" still applies following expiry of the delay time. On the other hand, if a value has changed during the delay time and the "Trigger Expression" no longer applies, the chosen action will not be executed.

Trigger Expression group box

The expression to be checked is specified in the right-hand **Trigger Expression** group box. Various variables can be linked with each other using the Boolean operators "Or" ("|"), "And" ("&"), "Not-Or" ("~|"), "Not-And" ("~&"), "Equal to" ("=") and "Not equal to" ("<>").

Parameter	Explanation
Operator Type	The Boolean operator used to link subordinate expressions and check the variables.
Nature	Select "Time" for checking a specified time or "Variable" for checking a variable value.
Device	Select the device for which a value should be checked.
Variable	The variable whose value is to be checked. This list shows only those variables available for the previously selected device.
Value	Value against which the variable is to be checked. This list shows only those values available for the previously selected variable.

Tab. 108: Trigger Expression group box

The dropdown lists for selection of the various setting options are displayed after clicking one of the predefined values "=", "No Variable Selected" or "No Value" (see section 9.11.4 "Example of creating a task").

The "=" and "<>" operators can be used to check variables of the PDU itself or its connected devices for a specific status. As an alternative, date details (day of week) can be checked.

The "|" and "&" operators can be used to link subordinate expressions with each other.

Proceed as follows to define an expression:

- When several expressions are to be checked: First specify whether the two subordinate expressions must both return the "true" value ("&" operator) or whether just one value is sufficient to initiate the action ("|" operator).
- Specify separately for all subordinate expressions whether they return the value "true" when the variable or the date matches the value ("=" operator) or not ("<>" operator).

9.11.3 Selecting an action

Finally, from the dropdown list assign an action to the task which is to be performed when the complete expression returns the value "true".

Note:
The action stored for a task is only ever executed following a status change. If the definition of a task changes, such as the logic of the switch output, the output is not switched directly following acceptance of the change, but only when the status of an input changes.

You can choose between the following settings:

Parameter	Explanation
Send Status Email	Send a status e-mail.
Send Status SMS	Send a status SMS.
Suppress Alarm Email	Suppress the sending of e-mails to selected receivers.
Suppress Alarm SMS	This setting has no effect.
Suppress Alarm Trap	Suppress the sending of traps to selected receivers.
Suppress Alarm Message	Suppress the alarm message for the selected status variable.
Set Variable Value	Set a variable value.
Shutdown Server	Regulated shutdown of a server.

Tab. 109: Details group box

After selecting your required action, it must be configured appropriately.

■ Click on **Setup**.

Depending on the previously selected action, in the appropriate dialogue you can specify, for example, who should be sent a status e-mail ("Send Status Email" action), for which status an alarm message should be suppressed ("Suppress Alarm Message" action), etc.

"Set Variable Value" action

If the "Set Variable Value" action is selected, "switchable" variables (such as the individual slots of a PDU switched/managed) can be set.

Note:
A device with a switchable variable must first be selected from the "Device" dropdown list so that the associated selection options are displayed in the fields below.

After clicking on **Setup**, the "Configure Set Variable Value" dialogue will appear.

Parameter	Explanation
Device	Device on which the variable is to be set.
Variable	Variable to be set.
Value on True	Value of the variables if the expression previously defined in the **Trigger Expression** group box has the value "true".
Value on False	Value of the variables if the expression previously defined in the **Trigger Expression** group box has the value "false".

Tab. 110: "Configure Set Variable Value" dialogue

Note:
In all cases, it is important to ensure that **different** values have been selected in the two dropdown lists "Value on True" and "Value on False". Otherwise, the variable will retain this value even if the value of the expression in the **Trigger Expression** group box changes.

Grouping outputs

The assignment of an output to a group allows a single task or switching command via the website, Telnet or SNMP to switch several outputs (also different components) in the same manner. This means it is not necessary to create a separate task for each of these outputs. Therefore, if you have assigned the same group number to multiple outputs, selecting **one** of these outputs will also switch all the other outputs in this group correspondingly.

"Shutdown Server" action

If the "Shutdown Server" action is selected, servers with a corresponding RCCMD software licence installed will be shut down in a regulated manner (see section 9.5.9 "Server Shutdown Configuration").

After clicking on the **Setup** button, the "Shutdown Server" dialogue will appear.

■ In the "Use" column, activate the servers you wish to shut down if the expression previously defined in the **Trigger Expression** group box has the value "true".

9.11.4 Example of creating a task

You would like to define a task whereby a status e-mail is sent if if the upper power limit for the entire PDU is exceeded at the weekend.

■ Click the "=" operator displayed by default in order to display the "Operator Type" dropdown list.
■ Select the "&" operator in this dropdown list in order to link the "weekend" and "power value" events with each other.
■ Click the "No Variable Selected" entry below the first "=" operator.
■ Select the "Time" entry in the "Nature" dropdown list.
■ Click the first entry, "Never".
■ Select the "Saturday" entry in the "Day of Week" list box.
■ While keeping the "Ctrl" key held down, also select the "Sunday" entry in this list.
■ Click the "No Variable Selected" entry below the second "=" operator.

EN

- Select the "Variable" entry (preselected by default) in the "Nature" dropdown list.
- Select the "[1] PDU-Controller" entry in the "Device" dropdown list.
- Select the "System Health.Temperature.Status" entry in the "Variable" dropdown list.
- Click the "(zero)" entry below the "[1] System Health.Temperature.Status" variable.
- Select the "High Warn" entry in the "Value" dropdown list.
- Now select the "Send Status Email" entry as an action in the dropdown list in the **Details** group box.
- Click on **Setup** to specify the desired receivers for the status e-mail via activation in the "Use" column.
- Check that the "Enable" checkbox is activated.

9.11.5 Deactivating or deleting a task

A task that is not required may be deactivated or deleted.

- Open the configuration menu for the respective task.

Deactivating a task

- Deactivate the "Enable" checkbox.
- Save the configuration by clicking on **Save**.

Deleting a task

- Click the **Clear** button.
  This will reset the task's settings to their default values.
- Save the configuration by clicking on **Save**.

9.12 Charts

Up to 16 diagrams may be generated on the **Charts** tab, showing the development over time of up to 6 variable values in each case. The data from these diagrams may be downloaded as CSV files for separate evaluation (e.g. using a spreadsheet program like Excel) (see section 9.12.3 "Evaluating the CSV files").

- Select the **Charts** tab in the right-hand area of the screen page.

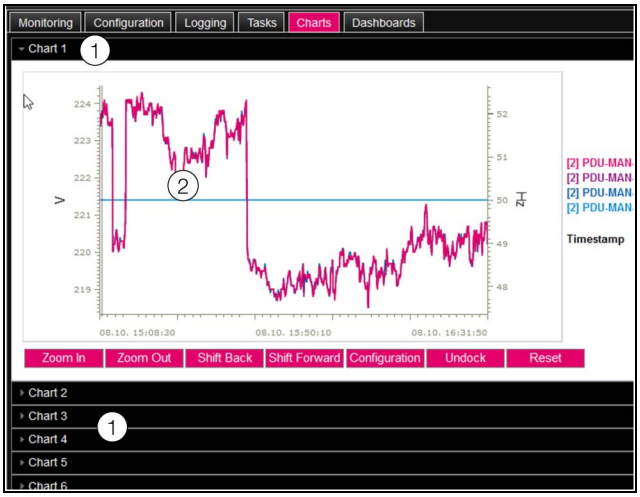

Fig. 71: Charts tab

Key

1 Title bars
2 Superimposed diagram

- Click on the title bar of the respective chart to show or hide the corresponding diagram and the configuration buttons.

9.12.1 Configuring a chart

In order to record the variable values, each chart first needs to be configured and activated (once only).

- If the buttons for configuration and navigation of the diagram are not displayed, please click on the title bar. The diagram will then drop down and can be configured (e.g. "Chart 1").
- Click the "Configuration" button.
  The "Chart Configuration" dialogue opens.

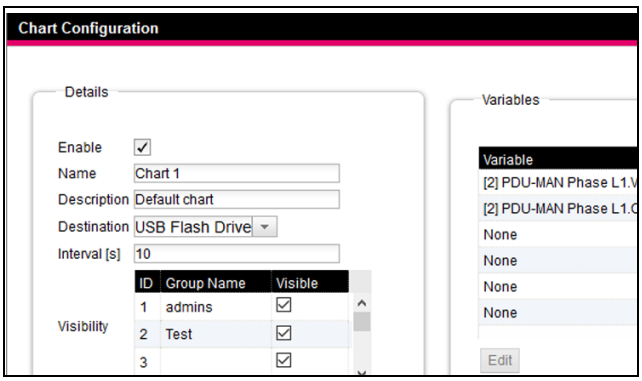

Fig. 72: "Chart Configuration" dialogue

Make the following settings in the left-hand **Details** group box:

Parameter	Explanation
Enable	Enable or disable the chart.
Name	Name of chart. This name is displayed in the title bar of the chart.
Description	Description of chart.

Tab. 111: Details group box

Parameter	Explanation
Destination	Displays the external storage medium on which the chart data is saved (USB flash drive).
Interval	Time interval in seconds in which the current value is saved.
Visibility	Activation of user groups who may view and configure the respective chart.

Tab. 111: Details group box

Before removing an external storage medium on which chart data is stored, the corresponding charts must first be deactivated. Otherwise, the files containing the chart data could become damaged. Alternatively, the external storage medium may also be logged off from the system prior to removal (see section 9.3.6 "Memory"). This will deactivate the charts automatically.

Note:
If an external storage medium is ejected directly, this may lead to a loss of chart data.

Up to 6 variables per chart are indicated in the right-hand group box **Variables** and their values displayed in graphical form.

Note:
Changing the settings of existing diagrams may lead to a loss of data. If applicable, the corresponding CSV files should be saved beforehand (see section 9.12.3 "Evaluating the CSV files").

- Select one of the 6 lines.
  If the entry "None" appears in one line, this variable is already assigned to the chart
- Click the **Edit** button.
  The "Variable Selection" dialogue opens.

The following parameters are available:

Parameter	Explanation
Device	Select the device from which a value is to be recorded.
Variable	The variable whose value is to be recorded. In this list, only the available variables for the previously selected device are displayed.

Tab. 112: Variables group box

- Click on **OK** to accept your chosen settings, or cancel the operation by clicking the **Cancel** button.
  The "Chart Configuration" dialogue will open again.
- If necessary, insert other variables into the chart in the same way.
- Click on the **Save** button to save the diagram with your chosen settings.
- Alternatively, click **Clear** to reset all diagram settings to their default values. All previously saved chart values will then be deleted.

If variables with different units are assigned to one diagram (for example, current in A and voltage in V), multiple y-axes will be created.

9.12.2 Diagram view

The left-hand limit of the x-axis is preset to the time when the chart was activated. The right-hand limit will "grow" each time the chart is refreshed following the time entered in the "Interval" parameter. Similarly, the y-axes will be adapted to allow all measurements to be displayed. To the right of the diagram, the values of all displayed variables are by default displayed as per the activation date of the diagram and the corresponding time stamp (date and time).

Displaying measurements at a specific time

As long as the chart is activated, you can display the precise measurements at a given time.

- Place the mouse cursor in the diagram.
  A vertical line will appear.

To the right of the diagram, the values of all displayed variables are displayed as per the marked date in plain language and the corresponding time stamp.

Adapting the displayed date range

Additionally, the displayed date range can be reduced, for example in order to monitor development over a specific period in greater detail.

- Click the **Zoom In** button.
  The entire development, from activation of the diagram to the current date, is no longer displayed. Each time you click on this button, the displayed date range gets smaller.
- Click on the **Shift Forward** button to shift the start date of the displayed range forwards to the current date.
- To shift the start date of the displayed range back to the chart's activation date, click on the **Shift Back** button.
- In the same way, click on the **Zoom Out** button to enlarge the displayed date range.
- Clicking the **Reset** button resets the zooming, i.e. the standard view is displayed.

Undocking the charts from the browser window

By default, the charts are displayed directly in the browser window underneath the relevant title bar. Alternatively, each chart can also be displayed in a separate window.

EN

Note:
Decoupling from the website is **not** available for Internet Explorer. This button is missing in such cases.

- Click on the **Undock** button for the required chart. The chart will now be displayed in a separate window, and the message "Chart is undocked" will appear in the main window underneath the title.

Fig. 73: Undocked chart

The separate windows of the charts can be moved and resized independently of the PDU website itself. This function may be used for multiple charts, allowing you to create a complete overview on the screen of your PC.

- In a separate window, click on the **Dock** button or simply close the window to display the chart underneath the title bar in the main window once again.

9.12.3 Evaluating the CSV files

The diagrams are generated from the data from CSV files. This data may be downloaded from the PDU via FTP and then evaluated separately (e.g. using a spreadsheet program like Excel).

The maximum size of a CSV file is 4 GB. Once this limit has been reached, the CSV file is saved as a backup file, and a new CSV file is automatically created. Once this second file too reaches the 4 GB limit, the first backup file is deleted when a new backup file is generated.

Downloading the CSV files

- Establish a connection between a PC and the PDU (see section 10.1 "Establishing an FTP connection").
- In the left-hand subwindow (PC), switch to any folder in which you want to store the CSV files.
- In the right-hand subwindow (PDU), switch to the "download" folder and then the sub-folder "usb-stick/records".
- Right-click the required CSV file and select "Download".

The CSV files are named according to the convention "chart.##.json.csv" whereby "##" is the number of the respective chart ("01" to "16").

Reading the CSV files into Excel

Below, we describe how a CSV file can be read for evaluation in Excel.

Note:
In principle, the CSV files could also be read in another spreadsheet program. However, the procedure may vary.

- First generate an empty spreadsheet in Excel.
- In Excel, select the CSV file you wish to read by clicking on **Data** > **From text** and then follow the Text Import Wizard.
- Please note the following settings:

  Step 1 of 3:
  – Data type: Delimited
  – Start import at row: 1
  – File origin: Windows (ANSI)

  Step 2 of 3:
  – Delimiters: Tab

  Step 3 of 3:
  – Column data format: Standard
- In step 3 of 3, click on the **Other...** button to define the decimal separators (Setting "Dot") and thousands separators (setting "Comma") used in the CSV file. Depending on the country-specific settings, these may already be preset by default.

Note:
If other separators are set for the numerical data, the time specified in column 2 may not be converted correctly later.

Display of the CSV files is subdivided into three zones:

– **Zone 1:** Line 1 displays general information about the chart as per the configuration (e.g. name of chart, description, start date).
– **Zone 2:** Separated by an empty line, from line 3 onwards, information about the variables recorded in the chart is given. The first two columns are particularly important in this connection.
  Column 1: Name of variable. These names are used as the "Title" in zone 3.
  Column 2: Precise description of the measurements recorded.
– **Zone 3:** Again separated by an empty line, finally, the time stamp and all recorded measurements are given.
  Column 1 (Time0): Unix time (number of seconds that have elapsed since 1 January 1970). This time cannot be used in Excel (or at least not easily).
  Column 2 (Time1): Time specification that may be used in Excel.

– **Columns 3 to max. 8:** The actual measurements are given in these columns.

The time specified in column 2 must be formatted as follows in order to convert it into a readable format:

- Highlight all the times in column 2.
- Right-click the highlighted range, and in the context menu select the entry "Format cells".
- In the "Format cells" dialogue, on the "Numbers" tab in the "Category" column, and select the entry "Special".
- Enter the number format "DD.MM.YYYY hh:mm:ss" in the "Type" box.
  The time stamp will then be output as a date and time and can therefore be used, for example, in a diagram.

9.13 Dashboards

Note:
Changes made in the dashboards described below can be made only by users who belong to the "admins" user group.

As many as 12 flexibly configurable websites can be created on the **Dashboards** tab. This makes it possible to define different views for different purposes and display only the required information.

Note:
After the **direct** login to a dashboard, the user is **not** logged out automatically after the specified time. The user remains logged in to the PDU while the dashboard is open.

9.13.1 Basic settings

- Select the **Dashboards** tab in the right-hand area of the screen page.

The following information is displayed:

Parameter	Explanation
Name	Dashboard name.
Description	Extended description of the dashboard.
Enabled	Flag whether the dashboard can be enabled ("Yes") or not ("No").

Tab. 113: Dashboards tab

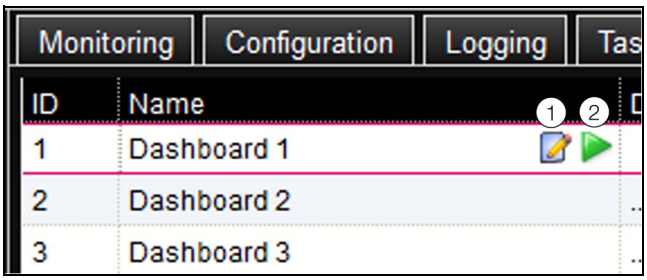

Fig. 74: Calling the "Dashboard Configuration" dialogue

Legend
1 "Edit" symbol
2 "Start" symbol

The above information can be changed in the "Dashboard Configuration" dialogue.

- Move the mouse cursor to the line of the dashboard whose information you want to change.
  An "Edit" symbol appears at the end of the "Name" column and the cursor changes to the "Hand" symbol. If the dashboard can be enabled (the "Enabled" parameter has the value "Yes"), the green "Start" symbol suffixed to the "Edit" symbol can be used to enable the dashboard.
- Click the "Edit" symbol.
  The "Dashboard Configuration" dialogue opens.
- Enter the required values for the named parameters.
- Confirm your entry by clicking the **Save** button.

Clicking the **Clear** button resets all inputs to their default values.

9.13.2 Configuring a dashboard

The contents of a dashboard must be configured (once). This requires that the dashboard is first enabled and then started.

- Check whether the "Yes" entry is displayed in the "Enabled" column for the dashboard to be configured.
- If this is not the case, first enable this setting in the "Dashboard Configuration" dialogue (see section 9.13.1 "Basic settings").
- Move the mouse cursor to the line of the dashboard to be configured.
  A "Start" symbol appears next to the "Edit" symbol at the end of the "Name" column and the cursor changes to a "Hand" symbol.
- Click the "Start" symbol.
  The "Auto-Logout is Enabled" dialogue opens.
- Read the notification text and click the **OK** button to confirm.
  A new browser window opens with the actual dashboard. The dashboard is empty for the first call because no boards have yet been selected.

EN

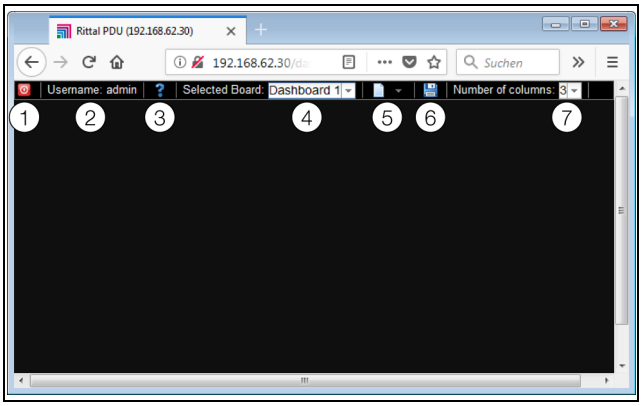

Fig. 75: Dashboard header line

Legend

1 **Logout** button
2 "Username" column
3 Call the "Board Details" dialogue
4 Dashboard selection
5 "Edit" symbol for selecting a dashboard component
6 "Save" symbol
7 Number of columns

Note:
The **Logout** button is displayed only when the login is made directly to a dashboard (see section 9.13.4 "Calling a dashboard").

The following information is displayed in the header line:

Parameter	Explanation
Username	Name of the user currently logged in.
"?"	Open the "Board Details" dialogue in which the basic settings of the dashboard are displayed.
Selected Board	Select the dashboard from a dropdown list. The names of the dashboards that can be enabled are displayed.
"Edit" Symbol	Select the components to be displayed on the dashboard.
"Save" Symbol	Save the dashboard. The configured components and the window layout are displayed for each login as they were configured at the time of saving. The actual display in a window is not saved.
Number of Columns	The number of columns in which the information to be displayed can be assigned (maximum nine columns).

Tab. 114: Dashboard header line

Selectable representations

The representations to be displayed on the dashboard are selected with the "Edit" symbol. The following representations can be selected (depending on the type and number of components connected to the PDU).

Parameter	Explanation
Visualizations	Graphical representations, such as the live stream of a connected webcam.
Device Tree	Navigation area with all connected components (see section 9.2.2 "Left-hand navigation area").
Logging View	**Logging** tab (see section 9.10 "Logging").
Message View	Currently pending messages (see section 9.2.4 "Message display").
Charts	Created charts (see section 9.12 "Charts").
Variable List	Current value of individual variables, such as the voltage value of phase L1.

Tab. 115: Selectable representations

Adding representations to a dashboard

- Ensure that the dashboard to which you want to add information is selected in the "Selected Board" column.
- Select in the "Number of Columns" column the number of columns into which the dashboard should be divided.

Note:
The number of columns can also be increased later. To reduce the number of columns, the columns to be deleted must not contain any representations (e.g. in column 3 when the dashboard should be reduced to two columns).

- Click the "Edit" symbol and select successively all representations to be displayed on the dashboard.
  Each representation newly added to the dashboard is initially always added at the end of the first column. It can be moved from there to another location within the dashboard.

Moving representations on a dashboard

Representations are moved with the "drag-and-drop" principle.

- Place the mouse cursor on the title line of a representation.
  The mouse cursor changes to a cross arrow.
- Press the left mouse key, keep it pressed and drag the representation to the required position, e.g. into a different column.

Before being stored, the position is shown with a dashed line; the other representations are moved down correspondingly.

It is not possible to place a representation totally free on the dashboard. If a representation is set at the lower edge of a column, it will be moved automatically as far as possible upwards, to the upper edge of the dash-

board or to the lower edge of a representation already placed there.

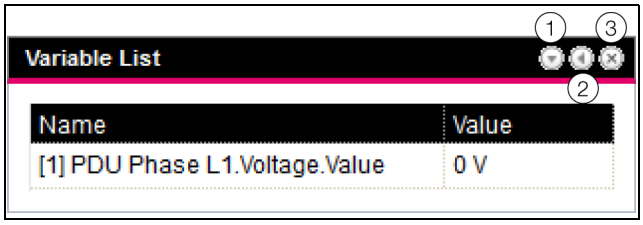

Fig. 76: Symbols in representations

Legend

1 Open and close representations
2 Adapting a list with variables
3 Removing representations

Expanding and collapsing representations

Every representation can be expanded and collapsed via the title line. The representation, however, remains available, only the details are hidden.

- Click the "Collapse" symbol in the title line of a representation.
  The representation on the title line is reduced.
- To redisplay the representation: Click the "Expand" symbol in the title line.
  The representation reappears with all information; representations below on the dashboard are moved correspondingly.

Adapting a list with variables

Multiple, separate representations with individual variables can be created. Alternatively, multiple variables can also be displayed in a representation.

- Click the "C" symbol in the title line of a "Variable List" type representation.
  The "Select Variables" dialogue is displayed.
- Enter a meaningful name for the variable list in the "Title" field.
- To change or delete an existing variable, click the line in which it is listed.
  The "Variable Selection" dialogue is displayed.
- Select in the "Device" field the component whose variable value you want to display.
- Select in the "Variable" field the variable you want to display.
- Alternatively, select the "None" entry in the "Device" field if you want to delete the variable from the representation.
- To add another variable, click the line with the "None" entry.
  The "Variable Selection" dialogue also opens in which you can select the variable to be displayed.
- Finally, click the "OK" button in the "Select Variables" dialogue to transfer the variable list to the representation.

Note:
Changeable variable values can also be changed directly from the dashboards, provided you have the appropriate user rights.

Changing the column widths

Within certain limits, the width of the individual columns can be changed. In particular for graphical representations, a minimum width is prescribed for the columns.

- Place the mouse cursor between two columns.
  The mouse cursor changes to a double arrow and the separator line between the columns is represented with a line.
- Press the left mouse key, keep it pressed and drag the separator line to the required position.

If the minimum column width is undershot, the width is automatically changed appropriately.

Removing representations

Every representation can be removed completely from the dashboard via the title line.

- Click the "X" symbol at the far right in the title line of a representation.
  The representation is removed directly from the dashboard without a prompt.

9.13.3 Saving a dashboard

To retain all changes permanently to a dashboard in accordance with section 9.13.2 "Configuring a dashboard", the current view must be saved.

- Click the "Save" symbol in the header line of the dashboard.
  The "Success" dialogue appears when the dashboard has been saved.
- Click the "OK" button in the "Success" dialogue.
  The previously saved dashboard is displayed again.

Note:
- The current display of the individual components is not saved when a dashboard is saved. For example, the "Device Tree" initially appears collapsed for each call down to the "Real Devices" level.
- When a dashboard is saved, all other dashboards are also saved automatically.
- If (even different) dashboards are being edited concurrently by multiple users, the changes of all other users will be lost when saved (on all dashboards).

9.13.4 Calling a dashboard

After a login, similarly to configuring, a dashboard can be called on a website (see section 9.13.2 "Configuring a dashboard"). In this case, the dashboard is opened in an **additional** browser window; the actual website remains open, even leaving the dashboard. The **Logout** button is then **not** displayed in the header line.

Alternatively, the login can be made directly to a dashboard when establishing an HTTP connection (see section 7.2.2 "Access to PDU interface website").

- After entering the login information, click the **Login to Dashboard** button.
  The dashboard view consisting only of the header line is displayed in the browser window.
- Select in the "Select Dashboard" field the dashboard to be displayed.

The "Select Dashboard" column can be used to switch at anytime between the dashboards that can be enabled. If changes have been made to the most recently selected dashboard that have not yet been saved, the "Dashboard was Modified" dialogue opens when the dashboard is switched.

- Click the **Yes** button if you do not want to save the changes and switch directly to the newly selected dashboard.
- Click the **No** button to return to the still unsaved dashboard and then save it (see section 9.13.3 "Saving a dashboard").

9.13.5 Calling the website via a mobile terminal

The dashboard stored in the configuration is used to represent the website of the PDU on a mobile terminal (see section 9.6.10 "Mobile").

- Call in the browser of your mobile terminal the address of the PDU, similarly as for a PC (see section 7.2.2 "Access to PDU interface website").
- Login with your user data.

The dashboard that was stored for the mobile terminals opens.

Note:
- If multiple variable lists with many variables are defined on the dashboard, delays when calling the mobile website can occur. This is independent of the mobile terminal power.
- If a dashboard is changed, all users logged in via a mobile terminal will be logged out automatically.

9.13.6 Exiting a dashboard

A dashboard is exited by closing the browser window. If the dashboard view was enabled directly during the login by clicking the **Login to Dashboard** button, the **Logout** button is shown at the left of the "Username" column in the header line.

- Click the **Logout** button to log out completely from the PDU.
  To prevent an inadvertent logout from the website, this is not possible when the dashboard view was called similarly to configuring a dashboard.

9.14 Access Configuration

The "Access Configuration" tab displays the stored access codes and the transponder boards. The **Edit**, **Add** and **Delete** buttons are used to change existing entries, create new entries and delete existing entries, respectively. The exact procedure is described in the assembly, installation and operating instructions for the CMC III access control (DK 7030.202).

10 Updates and data backup

FTP or SFTP access to the PDU is required in order to perform software updates and for data backup. For this reason, FTP /SFTP access should be blocked as a general rule and only briefly activated to perform these tasks (see section 9.5.4 "File transfer configuration").

10.1 Establishing an FTP connection

To establish an FTP connection, you will need the IP address of the PDU. If this address is not known, because, for example, the DHCP function is activated, the IP address may be displayed directly on the PDU display (see section 7.1 "Operating using the control components on the front").

An appropriate FTP client program is also required to establish an FTP connection (or SFTP connection). Rittal recommends the use of FileZilla.

- Install an FTP client program on the computer you wish to use to establish the FTP connection to the PDU.
- Establish the network connection between the PDU and the computer.
- Ensure that the PDU and the computer have the same address range.
- Enter the appropriate access data in the FTP program. Example for the required access data:
  - IP address: 192.168.0.200. The determination of the PDU IP address is described in section 7.2.1 "Establishing the network connection".
  - Username: admin
  - Password: admin
  - Port: 21 (FTP) or 22 (SFTP)
- Start the connection between the computer and the PDU, remembering to activate the setting: "Bypass proxy settings".

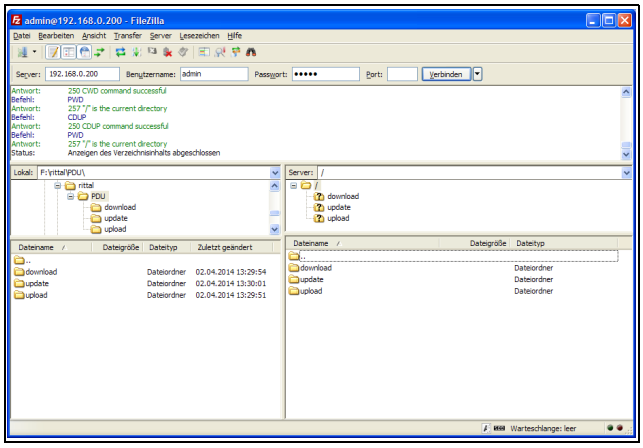

Fig. 77: FileZilla

The left-hand subwindow now shows the folder structure and the content of the PC; the right-hand subwindow contains the equivalent content of the PDU.

10.2 Performing an update

10.2.1 Notes for performing an update

Observe the following security notes for performing an update.

Note:
The user is responsible for performing the update in the associated network environment.

Before starting an update, ensure that the security application connected to the PDU can be interrupted for the duration of the update.

Ensure that you have access to the PDU, because, for example, you will need to check the current status on-site when carrying out the update.

During the update process, the power supply to the PDU must not be interrupted under any circumstances.

If the update is performed using the USB connection, under no circumstances must the USB device be removed during the update process.

None of the connected components may be disconnected from the PDU during the update process.

Under some circumstances, an update can reset the PDU settings to their factory state.

Alongside the two options for performing an update via USB or via (S)FTP described in this section, it can also be implemented via the website of the PDU metered/metered plus/switched/managed (see section 9.6.7 "Firmware Update").

10.2.2 Downloading the software update

A software update for the PDU can be downloaded from the Internet address specified in section 16 "Customer service addresses". The update will be provided as a tar archive.

- Download the current software version from the website and save it on your computer.

10.2.3 Update via USB

Observe the following notes for updating the PDU via USB:

- The USB storage medium used for the update must be formatted as FAT.
- In addition to the file for the software update, any other data may be present on the USB storage medium.

EN

Proceed as follows to perform the update:
- Copy the downloaded tar file into the root directory of the USB storage medium.
- Start the PDU if necessary.
- Wait until the multi-LED on the front is continuously illuminated green, orange or red or is flashing.
- Then insert the USB storage medium into the appropriate USB slot on the front of the PDU.

The update process starts automatically after a few seconds. This is indicated by a red flashing of the multi-LED (so-called heartbeat, alternately long and short).
If the current software version (or a later version) is already installed on the PDU, no update will be performed.
Depending on the number of connected sensors that are also updated, the complete update process takes approx. 15 minutes.

10.2.4 Update via FTP or SFTP

Proceed as follows to perform the update:
- Establish a connection between a PC and the PDU (see section 10.1 "Establishing an FTP connection").
- Switch to the "update" folder in the right-hand subwindow (PDU).
- In the left-hand subwindow (PC), switch to the folder in which you stored the update file previously.
- Right-click the update file and select the "Upload" action.

The update process starts automatically after a few seconds. This is indicated by red flashing of the multi-LED (so-called heartbeat, alternately long and short).

10.2.5 Finalizing the update

The system reboots automatically when the PDU update has finished. On completion of booting, the LED on the front indicates the PDU status: green, orange or red.
This may be followed by an update of the connected sensors. During this operation, the status LED of the sensors flashes fast, while the status LED of the PDU flashes white. The sensor currently being updated also flashes purple.

Note:
Under no circumstances may the sensors be disconnected from the PDU during the update.

The update of the PDU is complete when the following conditions have been fulfilled:
1. The LED on the front of the PDU is illuminated according to its status: green, orange or red.
2. The LEDs on the bus connection of the sensors are illuminated green.
3. The multi-LEDs of the sensors behind the front cover flash blue.

The progress of the update is logged in the "*.status" file. Depending on the type of update process, this file is located either in the root directory of the USB storage medium or in the Update folder of the PDU. The status file is a text file that can be opened with an editor or a text processing program.
- For an update via (S)FTP or via the website: Transfer this file using an FTP connection from the Update folder of the PDU to a PC.
- For an update via USB: Copy instead from the USB storage medium to a PC.
- Open the file with an editor and check whether the update was performed successfully or whether error messages have been issued.

Note:
Finally, press "Ctrl"+"F5" in the browser to reload the complete website from the PDU. All the changes will now be effective.

10.3 Performing a data backup

Rittal recommends regular data backups of the PDU configuration.
Proceed as follows to perform a data backup:
- Establish an FTP connection between a PC and the PDU (see section 10.1 "Establishing an FTP connection").
- In the left-hand subwindow (PC), switch to any folder in which you want to store the data backup.
- Switch to the "download" folder in the right-hand subwindow (PDU).
- Right-click the "cmcIIIsave.cfg" file (from software version V3.11.00 onwards) and select the "download" action.

The settings and configurations of all connected components as displayed currently for the individual sensors on the **Monitoring** (see section 9.3 "Monitoring index tab") and **Configuration** (see section 9.4 "Configuration index tab") tabs are stored in this file.
For a second PDU, this configuration file can likewise be dragged to the upload directory in the same way. All general settings (other than the TCP/IP settings) are then taken from this file. If the same sensors, etc. are also installed in the same sequence on the second PDU, all limit values of these sensors are also transferred.

Note:
It is not possible to transfer a configuration file that was saved from a PDU with an older software version to a PDU with a newer software version.

10.4 Saving additional information locally

"Download" folder

Just as with a data backup, further files can be downloaded onto a PC from the "download" folder. These are text files with the following content:
1. "Devices.cmc3": The configurations of all connected components as displayed for the individual sensors

on the **Monitoring** (see section 9.3 "Monitoring index tab") and **Configuration** (see section 9.4 "Configuration index tab") tabs.

2. "Logging.cmc3": Complete, i.e. unfiltered log information for the PDU (see section 9.9.4 "SMS Receivers").
3. "cmcIIIsave.cfg": Settings and configurations for all connected components (see section 10.3 "Performing a data backup").
4. "syslog.cmc": File for transferring the syslog information.

■ If necessary, rename the files on the PC after downloading, to uniquely identify the various different file versions.

"Download/docs" folder

Further files can be downloaded from the "download/docs" folder. Text files are also involved:

1. "Configuration.cmc3": Configuration of the complete "Processing Unit" system as can also be displayed on the **Configuration** tab (see section 9.4 "Configuration index tab").
2. "Configuration.cmc3.history": List of all configuration changes. Every change is identified with the revision version as well as with the date and time of the predecessor version and the current version.
3. "OID_List.cmc3": List of all OIDs of the variables of the PDU and connected components as required for polling via SNMP.
4. "OID_List.changes": List of changes to all OIDs during the last update.
5. "OID_List.old": List of changes to all OIDs before the last update.
6. "sysinfo.txt": Information about the software versions of both file systems in the PDU, and which of the two file systems is active.
7. "system.log": Log information about all system actions such as configuration changes.
8. "ModbusMap.cmc3": List of all variables that can be queried via Modbus.

"Download/docs/Configuration.cmc3.repository" folder

This folder additionally contains individual files for all the configuration changes implemented (patch files).

"Download/docs/lists" folder

The "download/docs/lists" folder contains CSV files, which may be viewed after downloading, e.g. with a spreadsheet program such as Excel:

1. "cmcIIIDevList.csv": List of all sensors and units connected to the system.
2. "cmcIIIVarList.csv": List of all variables provided by the system.

"Download/usb-stick" folder

If you have connected an external storage medium (USB stick) to the PDU, the data from charts (see section 9.12 "Charts") will be recorded there.

■ Download the data from these directories for further evaluation.

EN

11 Inspection and maintenance

11.1 Safety instructions

Danger!
The PDU must not be opened. There are no parts included that require maintenance.

Danger!
Prior to performing any work on the PDU, the unit must be disconnected from the power supply and protected against being switched on again.

11.2 Required work

11.2.1 Inspection

The PDU must be checked regularly for complete and correct functioning. Rittal recommends a regular function test when required, but at least once a year.

11.2.2 Servicing

Because the unit is largely maintenance-free, maintenance of the unit is limited to the "inspection" and "cleaning" tasks.

11.3 Factory reset

To reset the device and delete all data and settings, the following steps must be performed:

- Disconnect the device from the power supply.
- Press and hold the Display key below the "R" in the Rittal logo ("Esc" key, fig. 15, item 1).
- Reconnect the device to the power supply and continue to hold the key until the Status LED illuminates red.

The Status LED flashing white indicates that the recovery process is in progress.

12 Storage and disposal

12.1 Storage

If the device is not used for a long period, Rittal recommends that you disconnect it from the mains power supply and protected from damp and dust.

12.2 Disposal

Since the PDU consists primarily of an aluminium section plus electronics (circuit board, cabling), the device must be passed on to the electronic waste recycling system for disposal.

EN

13 Technical specifications

13.1 General technical specifications

Technical specifications	
Electrical connection data	DK01: 16 A, single-phase (230 V), 50/60 Hz DK02: 32 A, single-phase (230 V), 50/60 Hz DK03: 16 A, 3-phase (400 V), 50/60 Hz DK04: 32 A, 3-phase (400 V), 50/60 Hz
PDU inherent supply	Integral long-range SMPS, error-tolerant from all phases
PDU power consumption	approx. 10 W
Redundant power supply via PoE	Yes, only on the ETH 1-connection (for PDU switched, PDU managed)
Marking of phases (3-phase PDUs only: L1, L2, L3)	L1: pink L2: black L3: white
Slots type EN 60 320/C13	Quantity depends on version, see section 13.2 "Allocation of fuses, phases and slots".
Slots type EN 60 320/C19	Quantity depends on version, see section 13.2 "Allocation of fuses, phases and slots".
Slots type EN 60 320/C13/C19 combination socket	Quantity depends on version, see section 13.2 "Allocation of fuses, phases and slots".
Slots type CEE 7/3/earthing pin	Quantity depends on version, see section 13.2 "Allocation of fuses, phases and slots".
Slots type BS 1363/UK-Plug	Quantity depends on version, see section 13.2 "Allocation of fuses, phases and slots".
No. of circuit-breakers	2 (single-phase) or 6 (3-phase) with 32 A version (protective circuit-breakers cannot be replaced)
Hydraulic magnetic circuit-breaker	16 A, type C (only with 32 A versions) (protective circuit-breakers cannot be replaced)
Slots individually switchable	Yes (not for PDU metered and metered +) (bistable relay, minimal inherent consumption)
Connector, PDU input	EN 60 309/CEE (depending on PDU version), EN 60 320/C20 for 7979.202/.302/.402/.502, BS 1363 UK plug for 7979.801/.811/.812/.813/.821
Length of connection cable	3 m (different for RCM and 7979.x02)
Connection cable type	H05-VV
No. of wires	3/5 (1-phase/3-phase PDU)
Cable cross-section	2.5 mm^2/4.0 mm^2 (for 16 A/32 A versions)
PDU enclosure width	44 mm (1 U)
PDU enclosure depth	70 mm 144 mm for 19" variant
PDU enclosure height (length)	Depends on product variant
PDU material	Aluminium, anodised in RAL 9005 (black)
PDU mounting adaptor	Plastic, black or grey

Tab. 116: General technical specifications

Technical specifications		
Measurement functions (input/ phase or output slot)	Values recorded	Voltage (V), current (A), frequency (Hz), active power (kW), active energy (kWh), apparent power (VA), power factor, neutral-conductor measurement / load imbalance detection, fuse monitoring (for 32 A/63 A versions)
	Voltage measurement range	90 V…260 V
	Voltage resolution	0.1 V
	Voltage accuracy	Measurement accuracy +/- 0.5% acc. to IEC / EN 62053-21
	Current measurement range	0…16/32/63 A (depending on PDU variant)
	Current resolution	0.01 A
	Current accuracy	Measurement accuracy +/- 0.5% acc. to IEC / EN 62053-21
	Frequency accuracy	Measurement accuracy +/- 0.5%% acc. to IEC / EN 62053-21
	Active power (kW) accuracy	Measurement accuracy +/- 0.5%% acc. to IEC / EN 62053-21
	Apparent power (VA) accuracy	Measurement accuracy +/- 0.5% acc. to IEC / EN 62053-21
	Active energy (kWh) accuracy	0.5%
	Power factor accuracy	Measurement accuracy +/- 0.5% acc. to IEC / EN 62 053-21
	Freely settable limit values for warning/alarm	Yes
Operating hours meter		Yes
Display		TFT-Display, RGB 128 x 128 pixels
LED for switching status of relays per slot		Yes (not for PDU metered)
Network interface		RJ 45, integral Web server
Supported protocols		HTTP, HTTPS, SSL, SSH, NTP, Telnet, TCP/IP v4 and v6, DHCP, DNS, NTP, Syslog, SNMP v1, v2c and v3, FTP/SFTP (update/file transfer), e-mail forwarding (SMTP), LDAP, OPC-UA, Modbus/TCP, RCCMD (Server Shutdown)
User administration including rights management		Yes
LDAP(S)/Radius/Active Directory connection		Yes
USB port for firmware update and data logging functions		Yes
CAN bus interface		RJ 45, for connecting sensors
CAN sensor types		see section 14 "Connection of sensors / Accessories"
Max. number of sensors per PDU		8, sensor configuration freely selectable, including 8 of the same type (for PDU metered/metered plus/ switched/managed, RCM)
Plug & play drivers in the Rittal RiZone DCIM software		Yes
Conformity		CE

Tab. 116: General technical specifications

EN

Technical specifications		
Standards	Safety	EN 62 368
	EMC	EN 55 022/B, EN 61 000-4-2, EN 61 000-4-3, EN 61 000-6-2, EN 61 000-6-3
Low Voltage Directive		2014/35/EU
EMC Directive		2014/30/EU
max. operating height		3,000 meters above sea level
min. operating time		100,000 hours
Protection category		IP 20 (IEC 60 529)
Protection category		1
Overvoltage category		II
Contamination level		2
Storage temperature		-20 °C…+70 °C
Ambient temperatures		+5 °C…+60 °C (at 100% load)
Ambient humidity		10...95% rel. humidity, non-condensing
Connector latch C13/C19		1 x (further optional 7979.020), not for UK versions, all slots are prepared for V-Lock pull-out safeguards
Warranty		24 months

Tab. 116: General technical specifications

13.2 Allocation of fuses, phases and slots

The assignment of the slots to the individual phases is marked with different colours on the front of the PDU (fig. 78).

– Phase 1 (L1): pink (fig. 78, item 1)
– Phase 2 (L2): black (fig. 78, item 2)
– Phase 3 (L3): white (fig. 78, item 3)

The numbering of the slots, as found in the web user interface of the PDU, begins with the power supply.

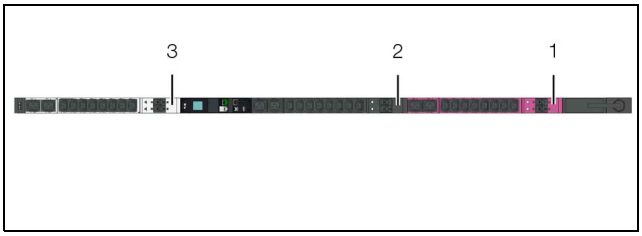

Fig. 78: Colour coding of individual phases and slots

For the PDU variant "32 A", the assignment of the fuses to the individual slots is also indicated with identically coloured triangles. Whereby, those triangles located on the same side of the PDU belong together (see fig. 79, item 1 and 2).

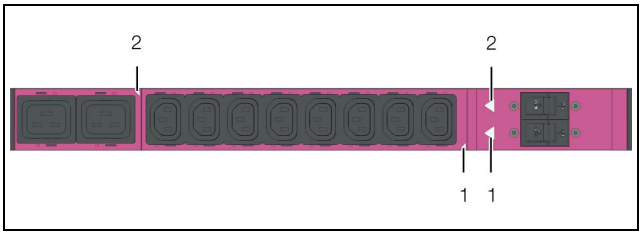

Fig. 79: Assignment of slots to the fuse

14 Connection of sensors / Accessories

Additional sensors may be connected to the intelligent PDUs for monitoring the ambient conditions in the IT rack, so that alarms can be triggered if limits are exceeded. The following list shows all available sensors with the relevant Model No. Regardless of the sensor type, the maximum number of sensors is limited to eight per PDU. Apart from the sensor itself, a sensor connection cable is also required and must be ordered separately. This is available in various lengths.

Model No. DK	Accessories
7010.020	I/O unit
7010.110	Temperature sensor
7010.120	Temperature/humidity sensor
7010.140	Airflow sensor
7010.150	Differential pressure sensor
7010.160	Access monitoring sensor
7010.180	Access control
7010.190	Universal sensor
7010.200	Smoke alarm
7010.210	Leak point sensor
7010.220	Leak sensor for bayed enclosure suites
7010.501	ADO control unit
7030.110	Temperature sensor
7030.111	Temperature/humidity sensor
7030.120	Infrared access sensor
7030.130	Vandalism sensor
7030.140	Analogue airflow sensor
7030.150	Analogue differential-pressure sensor
7030.190	Universal sensor
7030.400	Smoke detector
7030.430	Leak sensor
7030.440	Leak sensor, 15 m
7030.100	CAN bus sensor
7030.200	CAN bus access
7030.202	Access control
7030.500	Door control module
7030.040	I/O unit

Tab. 117: Accessories for the PDU metered/metered plus/ switched/managed

Model No. DK	Accessories
7030.050	Power unit
7030.571	CMC III LTE unit
7338.121	DET AC Plus III master extinguisher system
7338.321	DET-AC III slave extinguisher system
7338.221	EFD III early fire detection
7859.050	PSM measurement bar 2 x 16 A
7859.053	PSM measurement bar 1 x 32 A
7859.410	PSM measurement module 8 x C13
7859.420	PSM measurement module 4 x C19/2 x C13
7859.430	PSM measurement module 4 x earthing pin / 2 x C13
9343.070	NH measurement module NH00, 150 A
9343.170	NH measurement module NH 1, 250 A
9343.270	NH measurement module NH 2, 400 A
9343.370	NH measurement module NH 3, 600 A

Tab. 117: Accessories for the PDU metered/metered plus/ switched/managed

The following CAN bus connection cables from the CMC III accessories range may be used:

Model No. DK	Accessories
7030.090	CAN Bus cable (2 x RJ 45) Length: 0,5 m
7030.091	CAN Bus cable (2 x RJ 45) Length: 1 m
7030.092	CAN Bus cable (2 x RJ 45) Length: 1,5 m
7030.093	CAN Bus cable (2 x RJ 45) Length: 2 m
7030.094	CAN Bus cable (2 x RJ 45) Length: 5 m
7030.095	CAN Bus cable (2 x RJ 45) Length: 10 m

Tab. 118: CAN Bus connection cable

The following accessories may be used with all PDU variants.

Accessories	Model No. DK
Covers for C13 socket, lockable	7955.010

Tab. 119: PDU accessories

EN

Accessories	Model No. DK
Covers for C 19 socket, lockable	7955.015
Connector, universal lock for C14/C20 connector	7955.020
Connection cable D/C19, 1.8 m	7200.216
Connection cable C19/C20, 1.8 m	7200.217

Tab. 119: PDU accessories

14.1 Alarm relay: Connection to switching devices

- Connect the devices to be switched to the potential-free relay output (fig. 21, item 14). Observe the pin assignment:

Pin	Signal
Pin 1	NC
Pin 2	C
Pin 3	NO

The parameters of the relay output can be set or viewed via the PDU website. For detailed information, see section 9.3.3 "Alarm Relay (Output)" and section 9.6.5 "General".

15 Glossary

Hysteresis:

If one of the upper limit values is exceeded (SetPtHigh) or one of the lower limit values is undercut (SetPtLow), a warning or an alarm is issued **immediately**. For a hysteresis of x%, the warning or the alarm will not clear until an upper limit value is undercut or a lower limit value is exceeded by a difference of x/100 * limit value to the limit value.

MIB (Management Information Base):

The MIB was developed for reading and editing network elements. The MIB for SNMP was defined in RFC 1157; the MIB-II for TCP/IP was defined in RFC 1213. The MIBs are registered as OID with the IANA (Internet Assigned Numbers Authority). Once an object has been assigned to an OID, the meaning may no longer be changed. Any overlapping with other OIDs is prohibited.

SNMP (Simple Network Management Protocol):

The SNMP is a simple network management protocol based on TCP/IP. It was developed to allow network components to be monitored and controlled at a central management station.

Trap:

Trap is the unrequested sending of SNMP messages.

Trap receiver:

The trap receiver is the recipient of SNMP messages.

EN

16 Customer service addresses

For technical queries, please contact:
Tel.: +49(0)2772 505-9052
E-mail: info@rittal.com
Homepage: www.rittal.com

For complaints or service requests, please contact:
Tel.: +49(0)2772 505-1855
E-mail: service@rittal.de

Rittal – The System.

Faster – better – everywhere.

- Enclosures
- Power Distribution
- Climate Control
- IT Infrastructure
- Software & Services

You can find the contact details of all
Rittal companies throughout the world here.

www.rittal.com/contact

09.2026 / D-0000-00002601-03-EN

RITTAL GmbH & Co. KG
Auf dem Stuetzelberg · 35745 Herborn · Germany
Phone +49 2772 505-0
E-mail: info@rittal.de · www.rittal.com