RITTAL GmbH & Co. KG

AUF DEM STÜTZELBERG
D-35745 Herborn

http://www.rittal.de

MODEL	SK3336.470 KRAE0320TT00V000EG	POWER SUPPLY	: 400V 3 50Hz - 460V 3 60Hz
DRAWING NUMBER	EP22016 -	AUXILIARY SUPPLY	24VAC
CODE		CUSTOMER	
		REFERENCE	

CREATED THE 25/02/2022 FF2

CHANGED ON THE

NUMBER OF PAGES 36

&EAB/1

PAGE OVERVIEW

2LP8_PAGKEL

PAGE	DESIGNATION	DATE REVISION	REVISOR
&EAA/1	COVER		
&EAB/1	PAGE OVERVIEW		
&EAB/2	PAGE OVERVIEW		
&EAB/3	PAGE OVERVIEW		
&EAB/4	PAGE OVERVIEW		
&EFS=PWC+EC01/1	POWER WIRING		
&EFS=PWC+EC01/2	POWER WIRING		
&EFS=AUA+EC01/1	AUXILIARY WIRING		
&EFS=AUA+EC01/2	AUXILIARY WIRING		
&EFS=AUA+EC01/3	AUXILIARY WIRING		
&EFS=AUA+EC01/4	AUXILIARY WIRING		
&EFS=AIN+EC01/1	AUXILIARY WIRING		
&EFS=ISN+EC01/1	IN/OUT SIGNALS		
&EMZ+EC01/1	UPC OVERVIEW		
&EMZ+EC01/2	PCOE I/O OVERVIEW		
&EMA/1	TERMINAL STRIP SUMMARY +EC01-X2-+EC01-X10		

PAGE OVERVIEW

2LP8_PAGKEL

PAGE	DESIGNATION	DATE REVISION	REVISOR
&EAA/1	COVER		
&EAB/1	PAGE OVERVIEW		
&EAB/2	PAGE OVERVIEW		
&EAB/3	PAGE OVERVIEW		
&EAB/4	PAGE OVERVIEW		
&EAB/5	PAGE OVERVIEW		
&EAB/6	PAGE OVERVIEW		
&EFS=PWC+EC01/1	POWER WIRING		
&EFS=PWC+EC01/2	POWER WIRING		
&EFS=AUA+EC01/1	AUXILIARY WIRING		
&EFS=AUA+EC01/2	AUXILIARY WIRING		
&EFS=AUA+EC01/3	AUXILIARY WIRING		
&EFS=AUA+EC01/4	AUXILIARY WIRING		
&EFS=AIN+EC01/1	AUXILIARY WIRING		
&EFS=ISN+EC01/1	IN/OUT SIGNALS		
&EMZ+EC01/1	UPC OVERVIEW		

PAGE OVERVIEW

2LP8_PAGKEL

PAGE	DESIGNATION	DATE REVISION	REVISOR
&EMA/2	TERMINAL DIAGRAM +EC01-X2		
&EMA/3	TERMINAL DIAGRAM +EC01-X2		
&EMA/4	TERMINAL DIAGRAM +EC01-X3		
&EMA/5	TERMINAL DIAGRAM +EC01-X2		
&EMA/6	TERMINAL DIAGRAM +EC01-X2		
&EMB/1	CABLE OVERVIEW =PWC+EC01-W0-=ISN+EC01-W21		
&EPC/1	BILL OF MATERIAL		
&EPC/2	BILL OF MATERIAL		
&EPC/3	BILL OF MATERIAL		
&EPC/4	BILL OF MATERIAL		
&EPC/5	BILL OF MATERIAL		
&EPC/6	BILL OF MATERIAL		
&EPC/7	BILL OF MATERIAL		
&EPC/8	BILL OF MATERIAL		
&EPC/9	BILL OF MATERIAL		
&EPC/10	BILL OF MATERIAL		

PAGE OVERVIEW

2LP8_PAGKEL

PAGE	DESIGNATION	DATE REVISION	REVISOR
&EPC/11	BILL OF MATERIAL		
&EPC/12	BILL OF MATERIAL		

CREATED BY FF2 ON THE 25/02/2022

REVISOR ON THE LAST REVISION

RITTAL GmbH & Co. KG

SK3336.470
KRAE0320TT00V000EG
PAGE OVERVIEW

DRAWING NUMBER EP22016

CABINET CODE

&EAB = +

EPLAN Electric P8 2022.0.3
2LP8_CARTRIT_ST
PAGES COUNTER 5
NUMBER OF PAGES 36
4

PAGE OVERVIEW

2LP8_PAGKEL

PAGE	DESIGNATION	DATE REVISION	REVISOR
&EMZ+EC01/2	PCOE I/O OVERVIEW		
&EMA/1	TERMINAL STRIP SUMMARY +EC01-X2-+EC01-X10		
&EMA/2	TERMINAL DIAGRAM +EC01-X2		
&EMA/3	TERMINAL DIAGRAM +EC01-X2		
&EMA/4	TERMINAL DIAGRAM +EC01-X3		
&EMA/5	TERMINAL DIAGRAM +EC01-X2		
&EMA/6	TERMINAL DIAGRAM +EC01-X2		
&EMB/1	CABLE OVERVIEW =PWC+EC01-W0-=ISN+EC01-W21		
&EPC/1	BILL OF MATERIAL		
&EPC/2	BILL OF MATERIAL		
&EPC/3	BILL OF MATERIAL		
&EPC/4	BILL OF MATERIAL		
&EPC/5	BILL OF MATERIAL		
&EPC/6	BILL OF MATERIAL		
&EPC/7	BILL OF MATERIAL		
&EPC/8	BILL OF MATERIAL		

PAGE OVERVIEW

2LP8_PAGKEL

PAGE	DESIGNATION	DATE REVISION	REVISOR
&EPC/9	BILL OF MATERIAL		
&EPC/10	BILL OF MATERIAL		
&EPC/11	BILL OF MATERIAL		
&EPC/12	BILL OF MATERIAL		

&EFS=PWC+EC01/1

CREATED BY FF2 ON THE 25/02/2022

REVISOR ON THE LAST REVISION

RITTAL GmbH & Co. KG

SK3336.470
KRAE0320TT00V000EG
PAGE OVERVIEW

DRAWING NUMBER EP22016

CABINET CODE

&EAB = +

EPLAN Electric P8 2022.0.3

2LP8_CARTRIT_ST

PAGES COUNTER 7

NUMBER OF PAGES 36

6

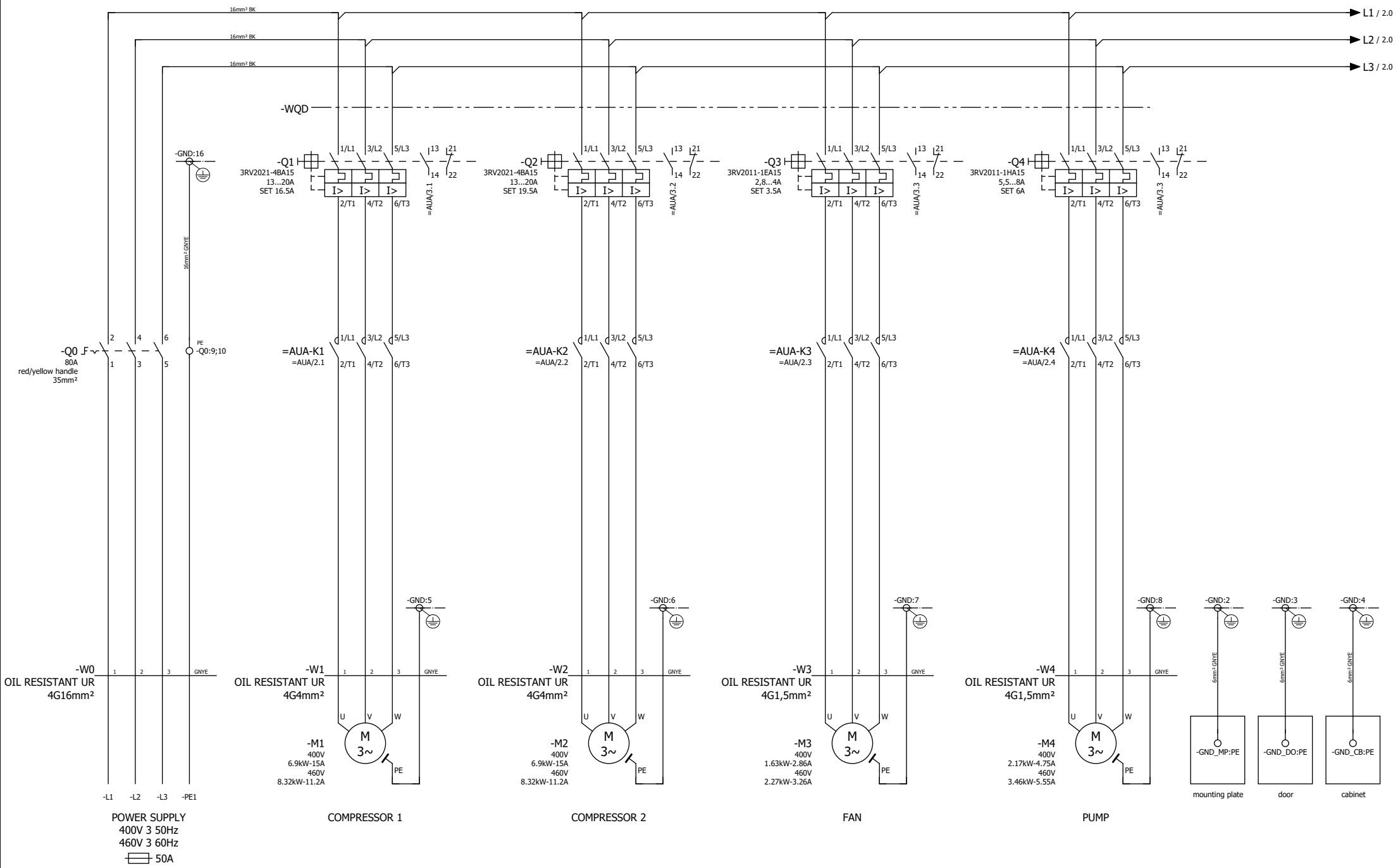

&EAB=+/6

2

CREATED BY FF2	ON THE 25/02/2022	RITTAL GmbH & Co. KG	SK3336.470 KRAE0320TT00V000EG POWER WIRING
REVISOR	ON THE	LAST REVISION	

DRAWING NUMBER	EP22016		EPLAN Electric P8 2022.0.3
			2LP8_CARTRIT_ST
CABINET CODE			PAGES COUNTER 8
			NUMBER OF PAGES 36
&EFS	=PWC	+EC01	1

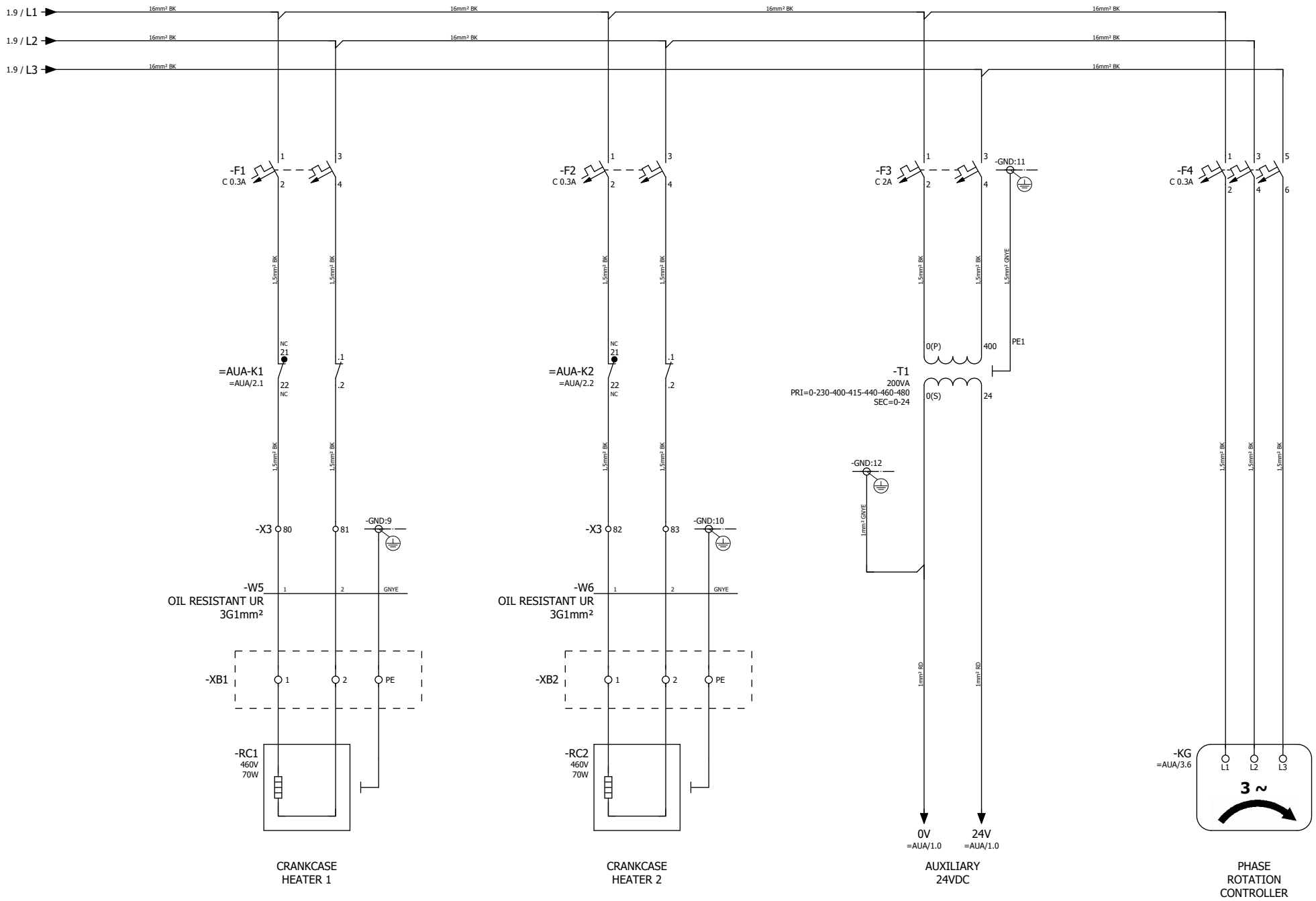

1

=AUA/1

CREATED BY FF2	ON THE 25/02/2022	RITTAL GmbH & Co. KG	SK3336.470 KRAE0320TT00V000EG POWER WIRING
REVISOR	ON THE	LAST REVISION	

DRAWING NUMBER	EP22016		EPLAN Electric P8 2022.0.3 2LP8_CARTRIT_ST
CABINET CODE			PAGES COUNTER 9 NUMBER OF PAGES 36
&EFS	=PWC	+EC01	2

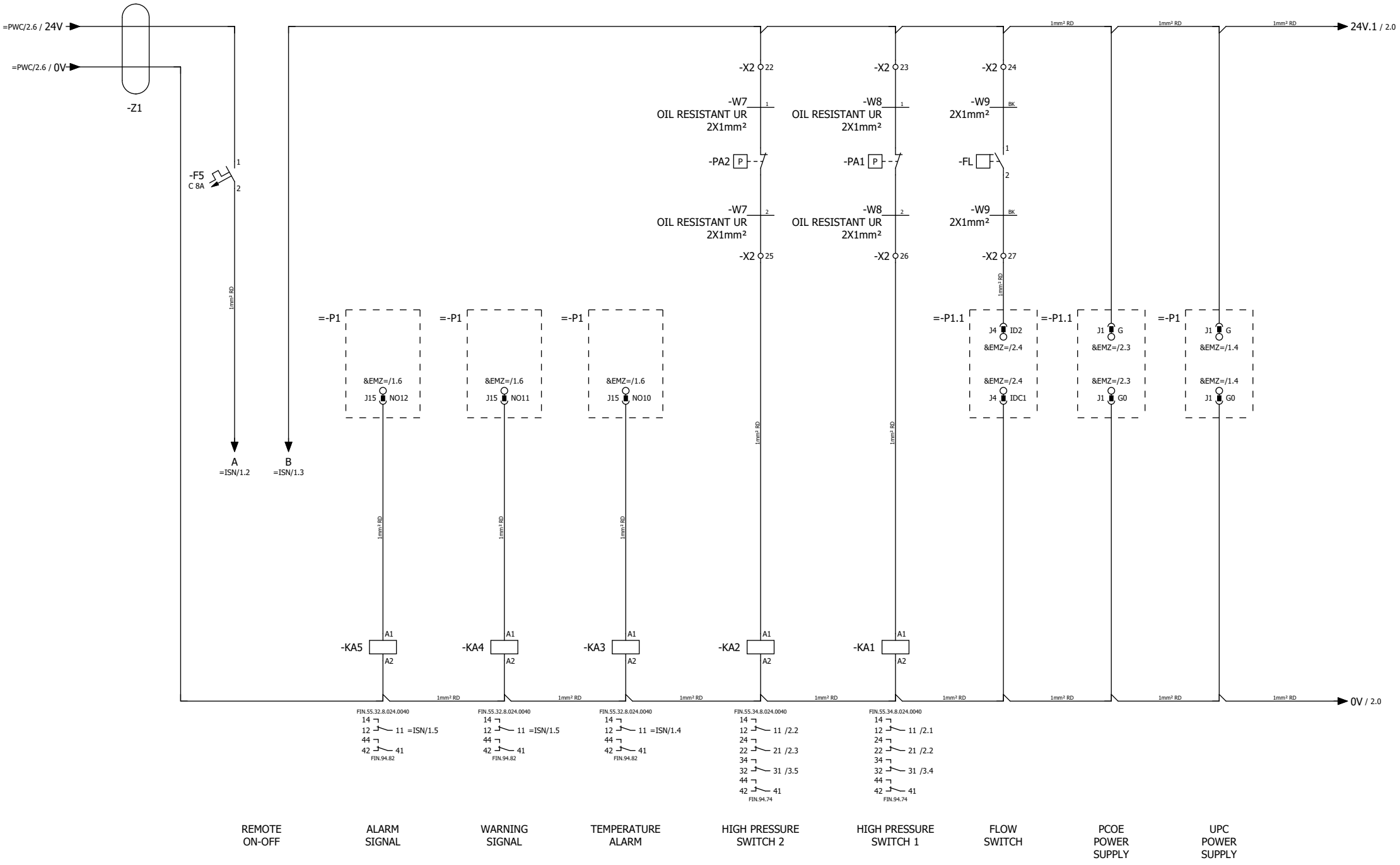

=PWC/2

2

CREATED BY FF2	ON THE 25/02/2022	RITTAL GmbH & Co. KG	SK3336.470 KRAE0320TT00V000EG AUXILIARY WIRING
REVISOR	ON THE	LAST REVISION	

DRAWING NUMBER	EP22016		EPLAN Electric P8 2022.0.3
			2LP8_CARTRIT_ST
CABINET CODE			PAGES COUNTER 10
			NUMBER OF PAGES 36
&EFS	=AUA	+EC01	1

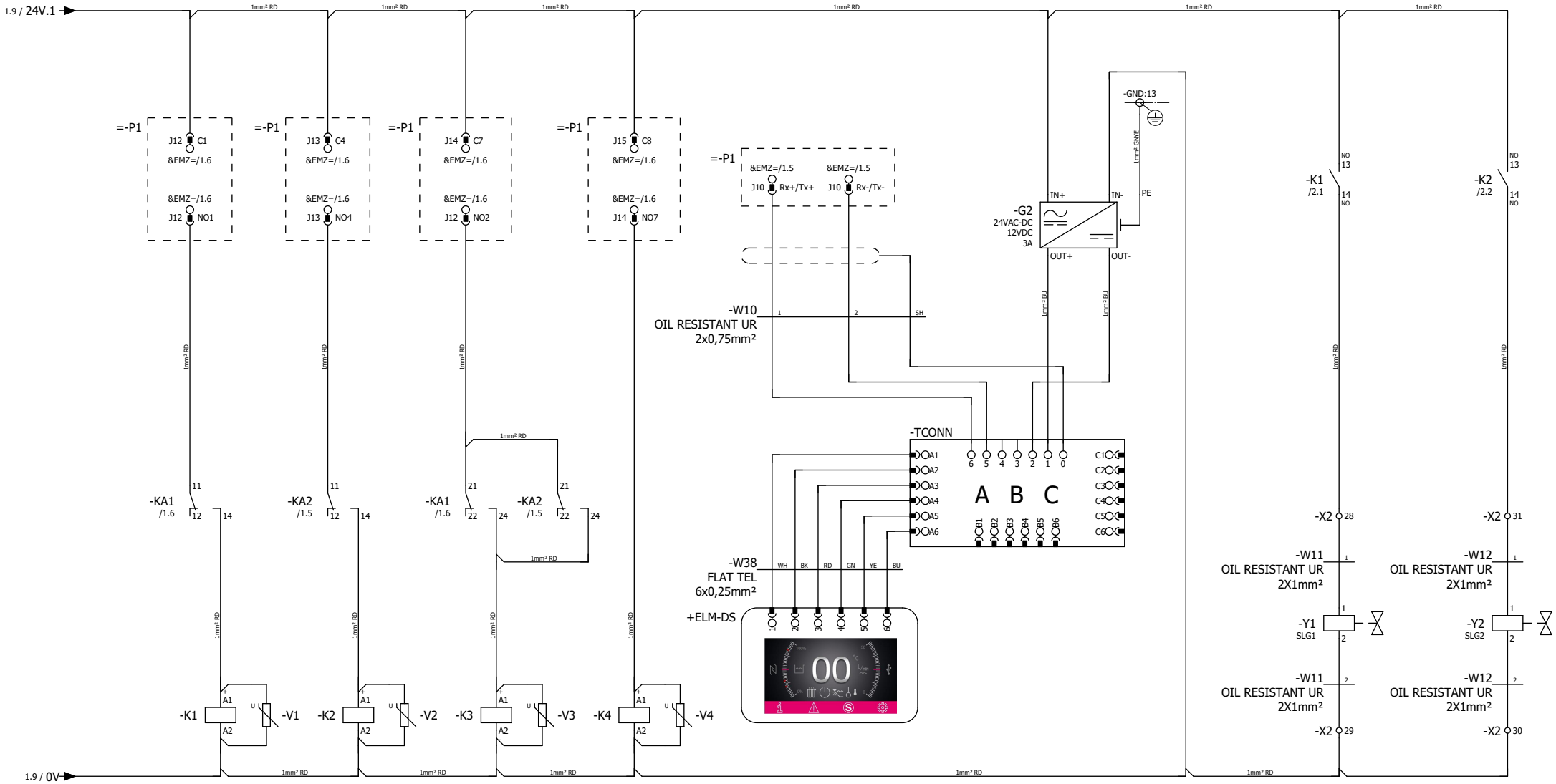

CREATED BY FF2	ON THE 25/02/2022	RITTAL GmbH & Co. KG	SK3336.470 KRAE0320TT00V000EG AUXILIARY WIRING
REVISOR	ON THE	LAST REVISION	

DRAWING NUMBER	EP22016
CABINET CODE	
EPLAN Electric P8	2022.0.3
2LP8_CARTRIT_ST	
PAGES COUNTER	11
NUMBER OF PAGES	36
&EFS =AUA +EC01	2

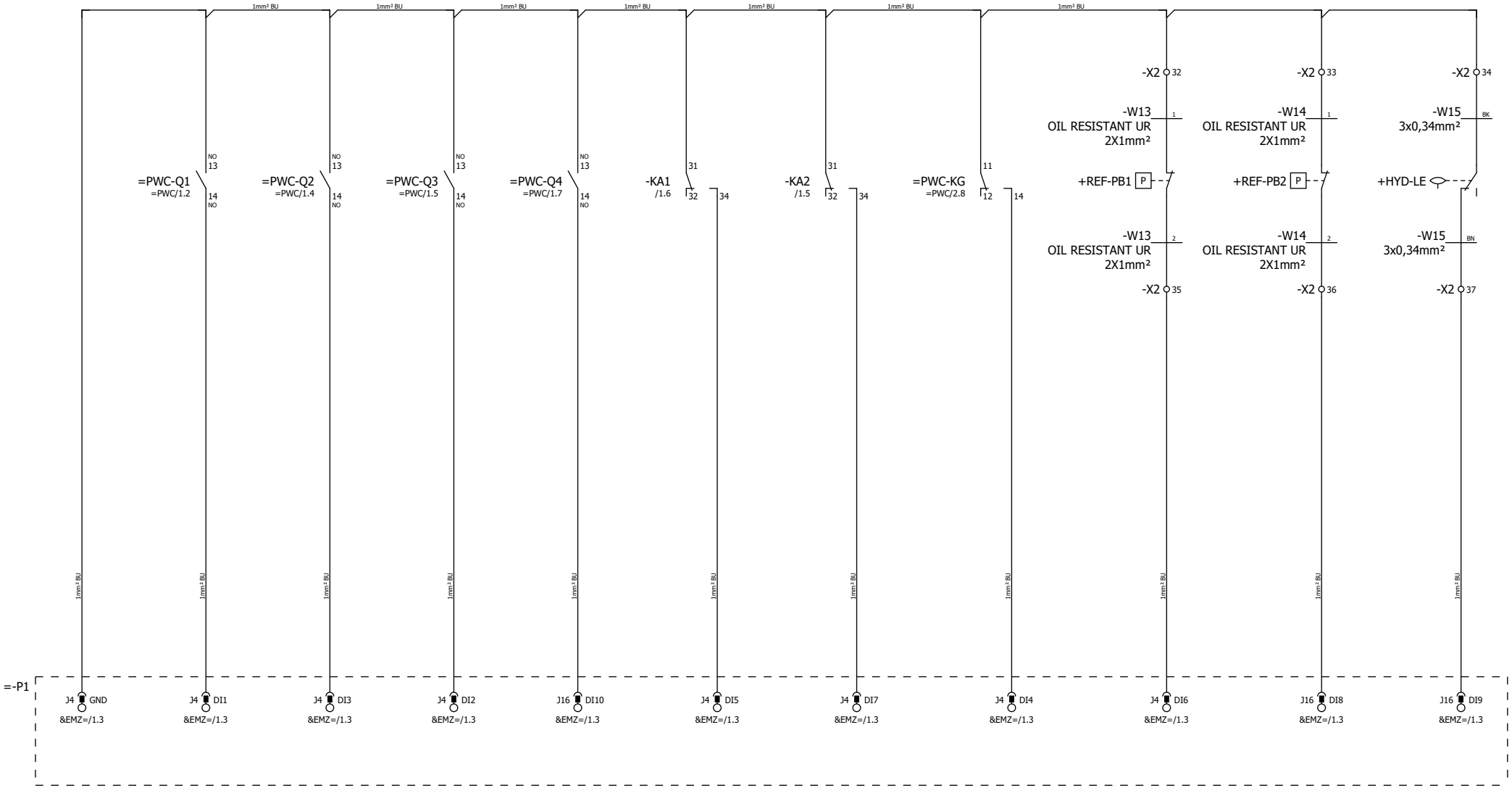

2 4

CREATED BY FF2	ON THE 25/02/2022	RITTAL GmbH & Co. KG	SK3336.470 KRAE0320TT00V000EG AUXILIARY WIRING
REVISOR	ON THE	LAST REVISION	

DRAWING NUMBER	EP22016		EPLAN Electric P8 2022.0.3
			2LP8_CARTRIT_ST
CABINET CODE			PAGES COUNTER 12
			NUMBER OF PAGES 36
&EFS	=AUA	+EC01	3

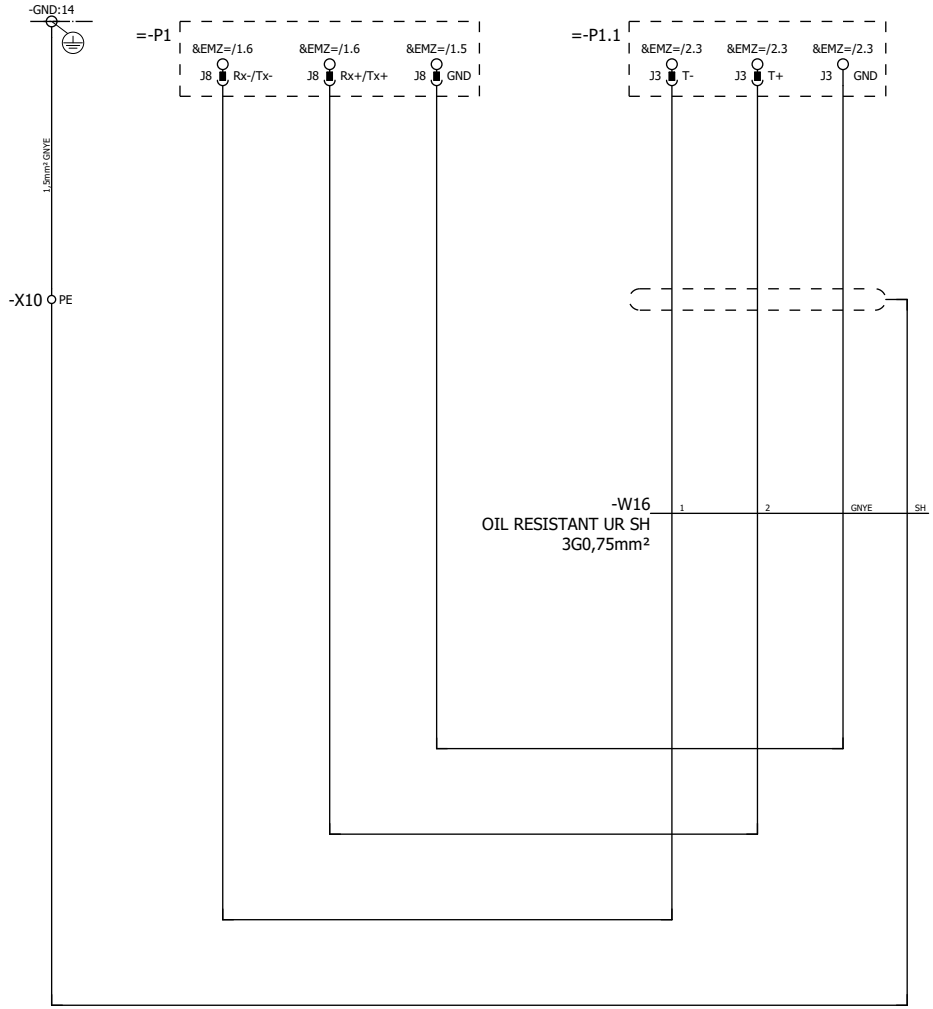

SERIAL COMMUNICATION
UPC <-> PCOE

=AIN/1

CREATED BY FF2	ON THE 25/02/2022	RITTAL GmbH & Co. KG	SK3336.470 KRAE0320TT00V000EG AUXILIARY WIRING
REVISOR	ON THE	LAST REVISION	

DRAWING NUMBER	EP22016		EPLAN Electric P8 2022.0.3
			2LP8_CARTRIT_ST
CABINET CODE			PAGES COUNTER 13
			NUMBER OF PAGES 36
&EFS	=AUA	+EC01	4

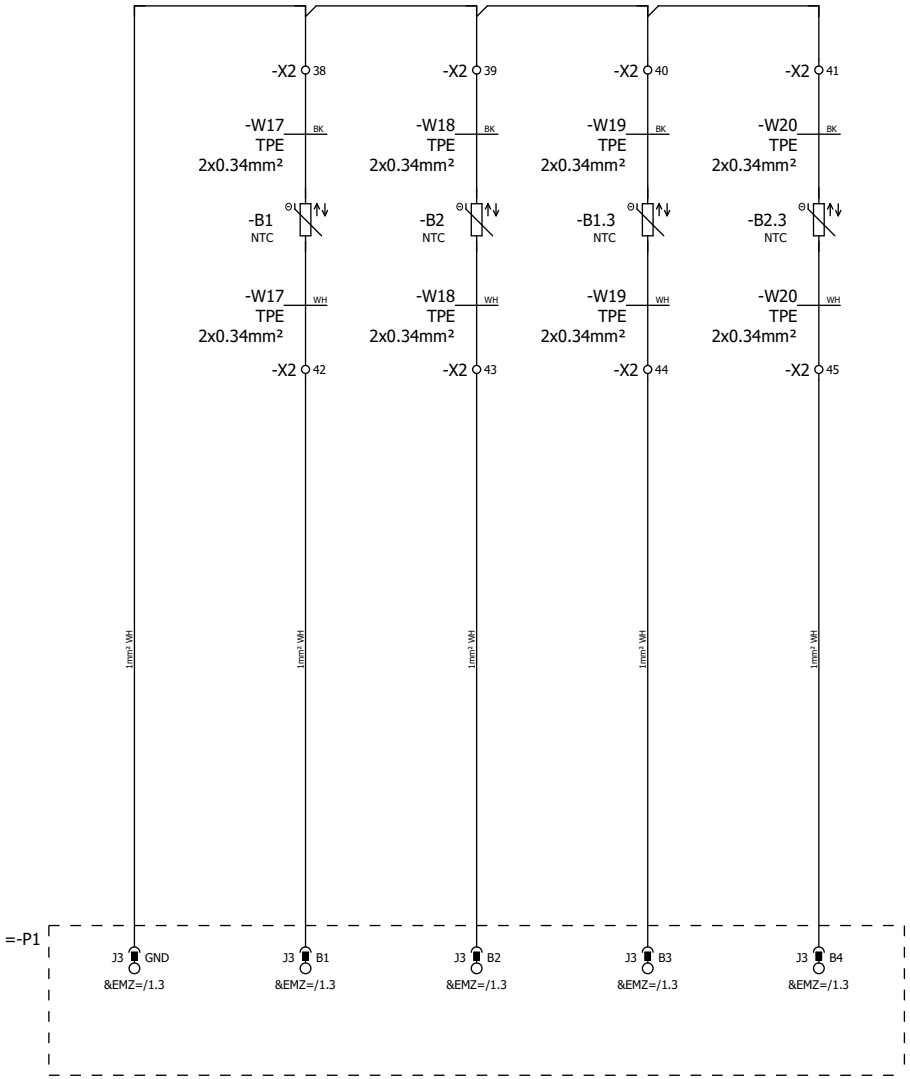

GND | OUTLET PROBE | AMBIENT PROBE | ANTIFREEZE PROBE 1 | ANTIFREEZE PROBE 2

=AUA/4

=ISN/1

CREATED BY FF2	ON THE 25/02/2022	RITTAL GmbH & Co. KG	SK3336.470 KRAE0320TT00V000EG AUXILIARY WIRING	DRAWING NUMBER EP22016	EPLAN Electric P8 2022.0.3 2LP8_CARTRIT_ST
REVISOR	ON THE	LAST REVISION		CABINET CODE	PAGES COUNTER 14 NUMBER OF PAGES 36
				&EFS =AIN +EC01	1

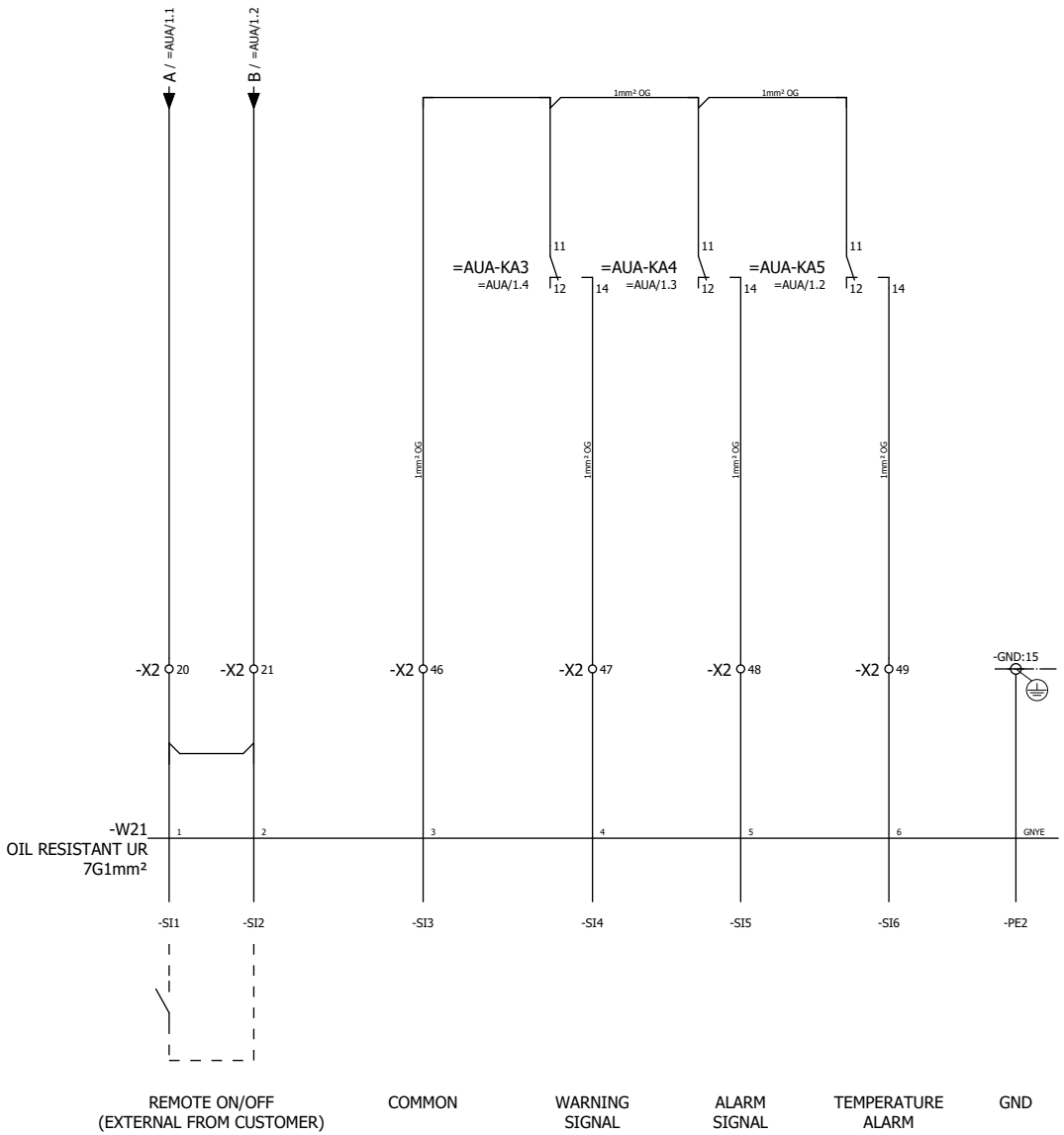

=AIN/1

&EMZ=/1

CREATED BY FF2	ON THE 25/02/2022	RITTAL GmbH & Co. KG	SK3336.470
REVISOR	ON THE	LAST REVISION	KRAE0320TT00V000EG
			IN/OUT SIGNALS

DRAWING NUMBER	EP22016		EPLAN Electric P8 2022.0.3
			2LP8_CARTRIT_ST
CABINET CODE			PAGES COUNTER 15
			NUMBER OF PAGES 36
&EFS	=ISN	+EC01	1

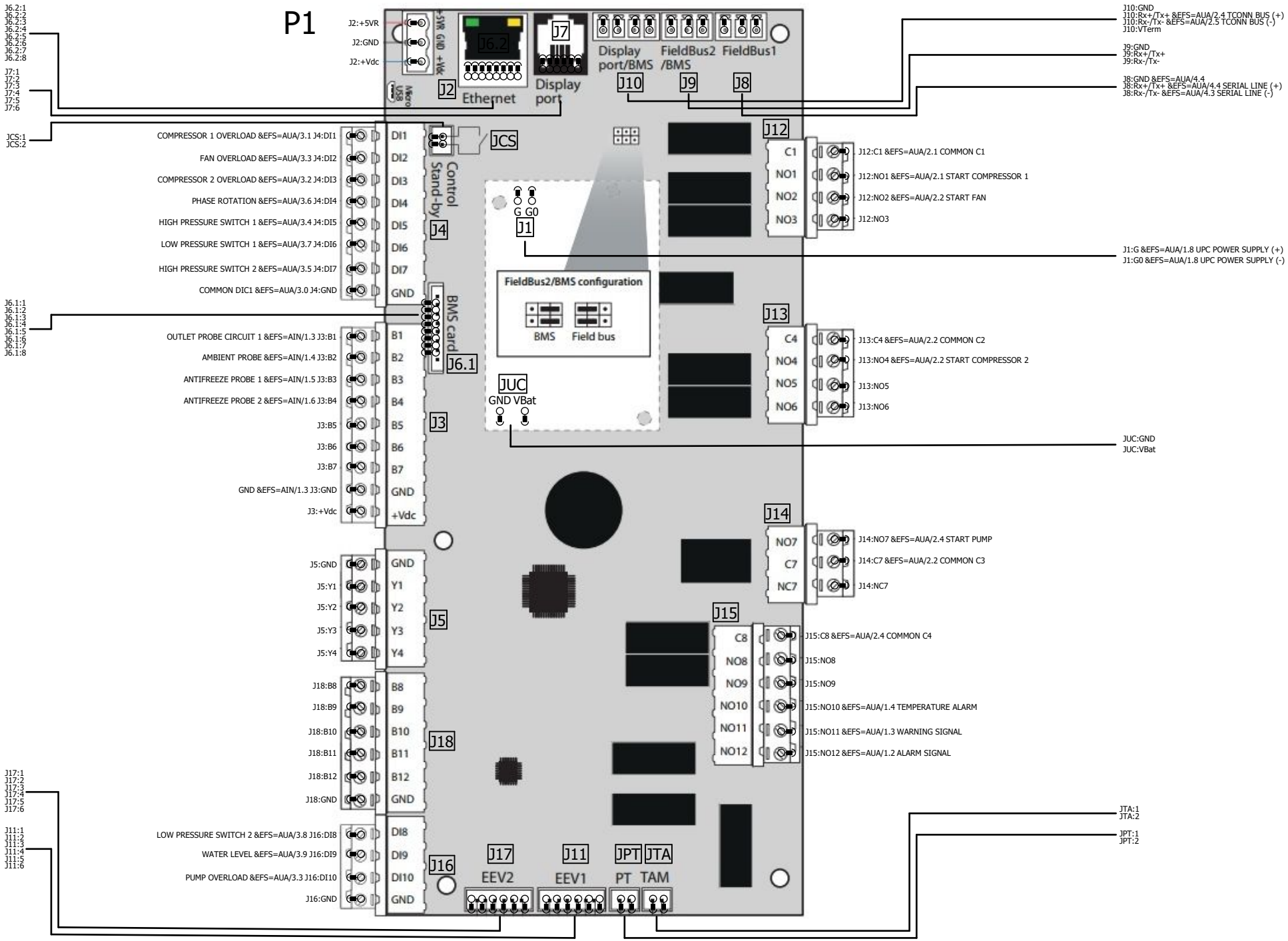

&EFS=ISN/1

2

CREATED BY FF2	ON THE 25/02/2022	RITTAL GmbH & Co. KG	SK3336.470 KRAE0320TT00V000EG UPC OVERVIEW	DRAWING NUMBER EP22016	EPLAN Electric P8 2022.0.3 2LP8_CARTRIT_ST
REVISOR	ON THE	LAST REVISION		CABINET CODE	PAGES COUNTER 16 NUMBER OF PAGES 36
				&EMZ = +EC01	1

-P1.1

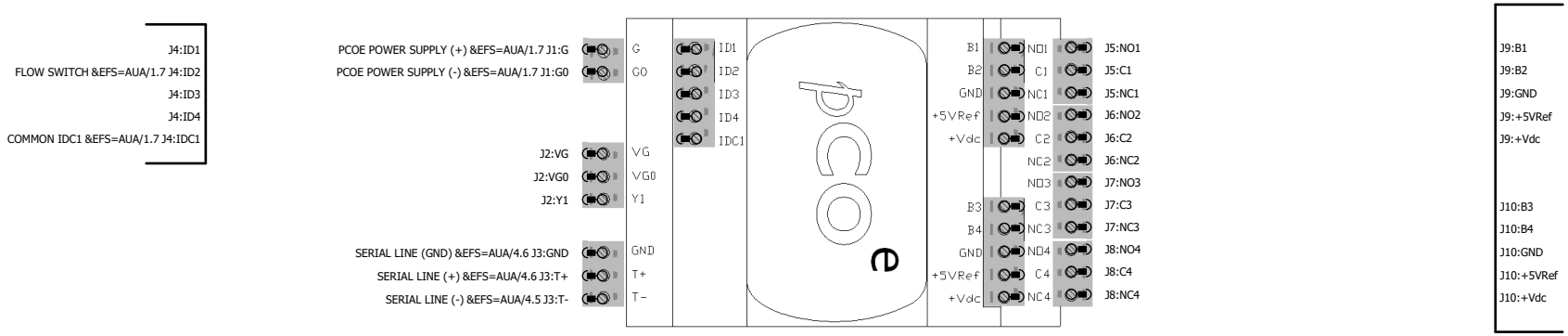

CREATED BY FF2	ON THE 25/02/2022	RITTAL GmbH & Co. KG	SK3336.470 KRAE0320TT00V000EG PCOE I/O OVERVIEW	DRAWING NUMBER EP22016		EPLAN Electric P8 2022.0.3	
REVISOR	ON THE	LAST REVISION		CABINET CODE		2LP8_CARTRIT_ST	
						PAGES COUNTER 17	
						NUMBER OF PAGES 36	
				&EMZ	= +EC01	2	

TERMINAL STRIP SUMMARY

2LP8_INMORKEL

STRIP DESIGNATION	TEXT OF THE STRIP DEFINITION	TERMINALS					GRAPHICS PAGE OF THE TERMINAL STRIP
		FIRST	LAST	SUM OF ALL PE	SUM OF ALL N	TOTAL NUMBER	
+EC01-X2		20	49	0	0	30	&EMA/2
+EC01-X3		80	83	0	0	4	&EMA/4
+EC01-X10		PE	PE	1	0	1	

TERMINAL DIAGRAM

STRIP DESIGNATION +EC01-X2

		PAGE / PATH	&EFS=ISN/1.2	&EFS=ISN/1.3	&EFS=AUA/1.5	&EFS=AUA/1.6	&EFS=AUA/1.7	&EFS=AUA/1.5	&EFS=AUA/1.6	&EFS=AUA/1.7	&EFS=AUA/2.8	&EFS=AUA/2.8	&EFS=AUA/2.9	&EFS=AUA/2.9	&EFS=AUA/3.7	&EFS=AUA/3.8	&EFS=AUA/3.9
		TERM. CROSS SECTION	2,5 mm²	2,5 mm²	2,5 mm²	2,5 mm²	2,5 mm²	2,5 mm²	2,5 mm²	2,5 mm²	2,5 mm²	2,5 mm²	2,5 mm²	2,5 mm²	2,5 mm²	2,5 mm²	2,5 mm²
CABLE NAME																	
		CONNECTION	2				J1:G	A1	A1	J4:ID2	14	A2		14	11		
		INT DESIGN	-F5				-P1.1	-KA2	-KA1	-P1.1	-K1	-K4		-K2	-KG		
		LEVEL	0	0	0	0	0	0	0	0	0	0	0	0	0	0	0
		JUMPERS	●	●	●	●	●	I	I	I	I	●	●	I	●	●	●
		TERMINAL NUMBER	**20**	**21**	**22**	**23**	**24**	**25**	**26**	**27**	**28**	**29**	**30**	**31**	**32**	**33**	**34**
CABLE NAME																	
	=AUA-W15																BK
	=AUA-W14	OIL RESISTANT UR														1	
	=AUA-W13	OIL RESISTANT UR													1		
	=AUA-W12	OIL RESISTANT UR											2	1			
	=AUA-W11	OIL RESISTANT UR									1	2					
	=AUA-W9						BK			BK							
	=AUA-W8	OIL RESISTANT UR				1			2								
	=AUA-W7	OIL RESISTANT UR			1			2									
	=ISN-W21	OIL RESISTANT UR	1	2													
		CONNECTION					1			2	1	2	2	1			
		EXT DESIGN	-SI1	-SI2	-PA2	-PA1	-FL	-PA2	-PA1	-FL	-Y1	-Y1	-Y2	-Y2	-PB1	-PB2	-LE
			REMOTE ON/OFF	REMOTE ON/OFF	HIGH PRESSURE SWITCH	HIGH PRESSURE SWITCH	WATER LEVEL	HIGH PRESSURE SWITCH	HIGH PRESSURE SWITCH	WATER LEVEL	GAS VALVE 1 (+)	GAS VALVE 1 (-)	GAS VALVE 2 (-)	GAS VALVE 2 (+)	LOW PRESSURE SWITCH 1	LOW PRESSURE SWITCH 2	WATER LEVEL

TERMINAL DIAGRAM

STRIP DESIGNATION +EC01-X2

		PAGE / PATH	&EFS=ISN/1.2	&EFS=ISN/1.3	&EFS=AUA/1.5	&EFS=AUA/1.6	&EFS=AUA/1.7	&EFS=AUA/1.5	&EFS=AUA/1.6	&EFS=AUA/1.7	&EFS=AUA/2.8	&EFS=AUA/2.8	&EFS=AUA/2.9	&EFS=AUA/2.9	&EFS=AUA/3.7	&EFS=AUA/3.8	&EFS=AUA/3.9
		TERM. CROSS SECTION	2,5 mm²	2,5 mm²	2,5 mm²	2,5 mm²	2,5 mm²	2,5 mm²	2,5 mm²	2,5 mm²	2,5 mm²	2,5 mm²	2,5 mm²	2,5 mm²	2,5 mm²	2,5 mm²	2,5 mm²
CABLE NAME																	
CABLE NAME																	
CABLE NAME																	
		CONNECTION	2				J1:G	A1	A1	J4:ID2	14	A2		14	11		
		INT DESIGN	-F5				-P1.1	-KA2	-KA1	-P1.1	-K1	-K4		-K2	-KG		
		LEVEL	0	0	0	0	0	0	0	0	0	0	0	0	0	0	0
		JUMPERS	●	●	●	●	●	I	I	I	I	●	●	I	●	●	●
		TERMINAL NUMBER	**20**	**21**	**22**	**23**	**24**	**25**	**26**	**27**	**28**	**29**	**30**	**31**	**32**	**33**	**34**
CABLE NAME																	
CABLE NAME	=AUA-W15																BK
CABLE NAME	=AUA-W14	OIL RESISTANT UR														1	
CABLE NAME	=AUA-W13	OIL RESISTANT UR													1		
CABLE NAME	=AUA-W12	OIL RESISTANT UR											2	1			
CABLE NAME	=AUA-W11	OIL RESISTANT UR									1	2					
CABLE NAME	=AUA-W9						BK			BK							
CABLE NAME	=AUA-W8	OIL RESISTANT UR				1			2								
CABLE NAME	=AUA-W7	OIL RESISTANT UR			1			2									
CABLE NAME	=ISN-W21	OIL RESISTANT UR	1	2													
STRIP DESIGNATION		CONNECTION					1			2	1	2	2	1			
STRIP DESIGNATION		EXT DESIGN	-SI1	-SI2	-PA2	-PA1	-FL	-PA2	-PA1	-FL	-Y1	-Y1	-Y2	-Y2	-PB1	-PB2	-LE
STRIP DESIGNATION			REMOTE ON/OFF	REMOTE ON/OFF	HIGH PRESSURE SWITCH	HIGH PRESSURE SWITCH	WATER LEVEL	HIGH PRESSURE SWITCH	HIGH PRESSURE SWITCH	WATER LEVEL	GAS VALVE 1 (+)	GAS VALVE 1 (-)	GAS VALVE 2 (-)	GAS VALVE 2 (+)	LOW PRESSURE SWITCH 1	LOW PRESSURE SWITCH 2	WATER LEVEL

TERMINAL DIAGRAM

STRIP DESIGNATION +EC01-X3

		PAGE / PATH	&EFS=PWC/2.2	&EFS=PWC/2.2	&EFS=PWC/2.4	&EFS=PWC/2.4
		TERM. CROSS SECTION	2,5 mm²	2,5 mm²	2,5 mm²	2,5 mm²
CABLE NAME						
		CONNECTION	22	.2	22	.2
		INT DESIGN	-K1	-K1	-K2	-K2
		LEVEL	0	0	0	0
		JUMPERS	—	—	—	—
		TERMINAL NUMBER	**80**	**81**	**82**	**83**
CABLE NAME						
	=PWC-W6	OIL RESISTANT UR			1	2
	=PWC-W5	OIL RESISTANT UR	1	2		
		CONNECTION	1	2	1	2
		EXT DESIGN	-XB1	-XB1	-XB2	-XB2
			CRANKCASE HEATER	CRANKCASE HEATER	CRANKCASE HEATER	CRANKCASE HEATER

CREATED BY FF2	ON THE 25/02/2022	RITTAL GmbH & Co. KG	SK3336.470
REVISOR	ON THE	LAST REVISION	KRAE0320TT00V000EG
			TERMINAL DIAGRAM +EC01-X3

DRAWING NUMBER	EP22016	EPLAN Electric P8	2022.0.3
		2LP8_CARTRIT_ST	
CABINET CODE		PAGES COUNTER	21
		NUMBER OF PAGES	36
&EMA	=	+	4

TERMINAL DIAGRAM

STRIP DESIGNATION +EC01-X2

		PAGE / PATH	&EFS=AUA/3.7	&EFS=AUA/3.8	&EFS=AUA/3.9	&EFS=AIN/1.3	&EFS=AIN/1.4	&EFS=AIN/1.5	&EFS=AIN/1.6	&EFS=AIN/1.3	&EFS=AIN/1.4	&EFS=AIN/1.5	&EFS=AIN/1.6	&EFS=ISN/1.3	&EFS=ISN/1.4	&EFS=ISN/1.5	&EFS=ISN/1.5
		TERM. CROSS SECTION	2,5 mm²	2,5 mm²	2,5 mm²	2,5 mm²	2,5 mm²	2,5 mm²	2,5 mm²	2,5 mm²	2,5 mm²	2,5 mm²	2,5 mm²	2,5 mm²	2,5 mm²	2,5 mm²	2,5 mm²
CABLE NAME																	
		CONNECTION	J4:DI6	J16:DI8	J16:DI9	J3:GND				J3:B1	J3:B2	J3:B3	J3:B4	11	14	14	14
		INT DESIGN	-P1	-P1	-P1	-P1				-P1	-P1	-P1	-P1	-KA3	-KA3	-KA4	-KA5
		LEVEL	0	0	0	0	0	0	0	0	0	0	0	0	0	0	0
		JUMPERS	I	I	I	●	●	●	●	I	I	I	I	I	I	I	I
		TERMINAL NUMBER	**35**	**36**	**37**	**38**	**39**	**40**	**41**	**42**	**43**	**44**	**45**	**46**	**47**	**48**	**49**
CABLE NAME																	
	=ISN-W21	OIL RESISTANT UR												3	4	5	6
	=AIN-W20	TPE							BK				WH				
	=AIN-W19	TPE						BK				WH					
	=AIN-W18	TPE					BK				WH						
	=AIN-W17	TPE				BK				WH							
	=AUA-W15				BN												
	=AUA-W14	OIL RESISTANT UR		2													
	=AUA-W13	OIL RESISTANT UR	2														
		CONNECTION															
		EXT DESIGN	-PB1	-PB2	-LE	-B1	-B2	-B1.3	-B2.3	-B1	-B2	-B1.3	-B2.3	-SI3	-SI4	-SI5	-SI6
			LOW PRESSURE SWITCH 1	LOW PRESSURE SWITCH 2	WATER LEVEL	OUTLET PROBE	AMBIENT PROBE	ANTIFREEZE PROBE 1	ANTIFREEZE PROBE 2	OUTLET PROBE	AMBIENT PROBE	ANTIFREEZE PROBE 1	ANTIFREEZE PROBE 2	COMMON	WARNING SIGNAL	ALARM SIGNAL	TEMPERATURE ALARM

CREATED BY FF2	ON THE 25/02/2022	RITTAL GmbH & Co. KG	SK3336.470
REVISOR	ON THE	LAST REVISION	KRAE0320TT00V000EG
			TERMINAL DIAGRAM +EC01-X2

DRAWING NUMBER	EP22016	EPLAN Electric P8	2022.0.3
		2LP8_CARTRIT_ST	
CABINET CODE		PAGES COUNTER	22
		NUMBER OF PAGES	36
&EMA	=	+	5

TERMINAL DIAGRAM

STRIP DESIGNATION +EC01-X2

		PAGE / PATH	&EFS=AUA/3.7	&EFS=AUA/3.8	&EFS=AUA/3.9	&EFS=AIN/1.3	&EFS=AIN/1.4	&EFS=AIN/1.5	&EFS=AIN/1.6	&EFS=AIN/1.3	&EFS=AIN/1.4	&EFS=AIN/1.5	&EFS=AIN/1.6	&EFS=ISN/1.3	&EFS=ISN/1.4	&EFS=ISN/1.5	&EFS=ISN/1.5
		TERM. CROSS SECTION	2,5 mm²	2,5 mm²	2,5 mm²	2,5 mm²	2,5 mm²	2,5 mm²	2,5 mm²	2,5 mm²	2,5 mm²	2,5 mm²	2,5 mm²	2,5 mm²	2,5 mm²	2,5 mm²	2,5 mm²
CABLE NAME																	
		CONNECTION	J4:DI6	J16:DI8	J16:DI9	J3:GND				J3:B1	J3:B2	J3:B3	J3:B4	11	14	14	14
		INT DESIGN	-P1	-P1	-P1	-P1				-P1	-P1	-P1	-P1	-KA3	-KA3	-KA4	-KA5
		LEVEL	0	0	0	0	0	0	0	0	0	0	0	0	0	0	0
		JUMPERS	I	I	I	●	●	●	●	I	I	I	I	I	I	I	I
		TERMINAL NUMBER	**35**	**36**	**37**	**38**	**39**	**40**	**41**	**42**	**43**	**44**	**45**	**46**	**47**	**48**	**49**
CABLE NAME																	
	=ISN-W21	OIL RESISTANT UR												3	4	5	6
	=AIN-W20	TPE							BK				WH				
	=AIN-W19	TPE						BK				WH					
	=AIN-W18	TPE					BK				WH						
	=AIN-W17	TPE				BK				WH							
	=AUA-W15				BN												
	=AUA-W14	OIL RESISTANT UR		2													
	=AUA-W13	OIL RESISTANT UR	2														
STRIP DESIGNATION		CONNECTION															
		EXT DESIGN	-PB1	-PB2	-LE	-B1	-B2	-B1.3	-B2.3	-B1	-B2	-B1.3	-B2.3	-SI3	-SI4	-SI5	-SI6
			LOW PRESSURE SWITCH 1	LOW PRESSURE SWITCH 2	WATER LEVEL	OUTLET PROBE	AMBIENT PROBE	ANTIFREEZE PROBE 1	ANTIFREEZE PROBE 2	OUTLET PROBE	AMBIENT PROBE	ANTIFREEZE PROBE 1	ANTIFREEZE PROBE 2	COMMON	WARNING SIGNAL	ALARM SIGNAL	TEMPERATURE ALARM

&EMB/1

CREATED BY FF2	ON THE 25/02/2022	RITTAL GmbH & Co. KG	SK3336.470
REVISOR	ON THE	LAST REVISION	KRAE0320TT00V000EG
			TERMINAL DIAGRAM +EC01-X2

DRAWING NUMBER	EP22016	EPLAN Electric P8	2022.0.3
		2LP8_CARTRIT_ST	
CABINET CODE		PAGES COUNTER	23
		NUMBER OF PAGES	36
&EMA	=	+	6

CABLE OVERVIEW

2LP8_CAVIKEL

CABLE NAME	FROM	TO	CABLE TYPE	CORES	CORES USED	CROSS SECTION		LENGHT	REMARKS	PAGE / PATH
=PWC+EC01-W0	=PWC+EC01-L1	=PWC+EC01-Q0	OIL RESISTANT UR	4G	4	16mm²		7m		&EFS=PWC+EC01/1.0
	=PWC+EC01-L2									
	=PWC+EC01-L3									
	=PWC+EC01-PE1									
=PWC+EC01-W1	=PWC+EC01-M1	=AUA+EC01-K1	OIL RESISTANT UR	4G	4	4mm²		2,8m		&EFS=PWC+EC01/1.2
		+EC01-GND								
=PWC+EC01-W2	=PWC+EC01-M2	=AUA+EC01-K2	OIL RESISTANT UR	4G	4	4mm²		2,5m		&EFS=PWC+EC01/1.4
		+EC01-GND								
=PWC+EC01-W3	=PWC+EC01-M3	=AUA+EC01-K3	OIL RESISTANT UR	4G	4	1,5mm²		4,3m		&EFS=PWC+EC01/1.5
		+EC01-GND								
=PWC+EC01-W4	=PWC+EC01-M4	=AUA+EC01-K4	OIL RESISTANT UR	4G	4	1,5mm²		4m		&EFS=PWC+EC01/1.7
		+EC01-GND								
=PWC+EC01-W5	+EC01-X3	=PWC+EC01-XB1	OIL RESISTANT UR	3G	3	1mm²		2m		&EFS=PWC+EC01/2.2
	+EC01-GND									
=PWC+EC01-W6	+EC01-X3	=PWC+EC01-XB2	OIL RESISTANT UR	3G	3	1mm²		2m		&EFS=PWC+EC01/2.4
	+EC01-GND									
=AUA+EC01-W7	+EC01-X2	=AUA+EC01-PA2	OIL RESISTANT UR	2X	2	1mm²				&EFS=AUA+EC01/1.5
=AUA+EC01-W8	+EC01-X2	=AUA+EC01-PA1	OIL RESISTANT UR	2X	2	1mm²				&EFS=AUA+EC01/1.6
=AUA+EC01-W9	+EC01-X2	=AUA+EC01-FL		2X	2	1mm²				&EFS=AUA+EC01/1.7
=AUA+EC01-W10	+EC01-P1	=AUA+EC01-TCONN	OIL RESISTANT UR	2	2	0,75mm²		0,268m		&EFS=AUA+EC01/2.4
=AUA+EC01-W11	+EC01-X2	=AUA+EC01-Y1	OIL RESISTANT UR	2X	2	1mm²		2,6m		&EFS=AUA+EC01/2.7
=AUA+EC01-W12	+EC01-X2	=AUA+EC01-Y2	OIL RESISTANT UR	2X	2	1mm²		2,6m		&EFS=AUA+EC01/2.8
=AUA+EC01-W13	+EC01-X2	=AUA+REF-PB1	OIL RESISTANT UR	2X	2	1mm²				&EFS=AUA+EC01/3.7
=AUA+EC01-W14	+EC01-X2	=AUA+REF-PB2	OIL RESISTANT UR	2X	2	1mm²				&EFS=AUA+EC01/3.8
=AUA+EC01-W15	+EC01-X2	=AUA+HYD-LE		3	2	0,34mm²				&EFS=AUA+EC01/3.9
=AUA+EC01-W16	+EC01-X10	+EC01-P1	OIL RESISTANT UR SH	3G	3	0,75mm²		0,77m		&EFS=AUA+EC01/4.5
	+EC01-P1.1									
=AIN+EC01-W17	+EC01-X2	=AIN+EC01-B1	TPE	2	2	0.34mm²				&EFS=AIN+EC01/1.3
=AIN+EC01-W18	+EC01-X2	=AIN+EC01-B2	TPE	2	2	0.34mm²				&EFS=AIN+EC01/1.4
=AIN+EC01-W19	+EC01-X2	=AIN+EC01-B1.3	TPE	2	2	0.34mm²				&EFS=AIN+EC01/1.5
=AIN+EC01-W20	+EC01-X2	=AIN+EC01-B2.3	TPE	2	2	0.34mm²				&EFS=AIN+EC01/1.6
=ISN+EC01-W21	+EC01-X2	=ISN+EC01-SI1	OIL RESISTANT UR	7G	7	1mm²		7m		&EFS=ISN+EC01/1.2
	+EC01-GND	=ISN+EC01-SI2								
		=ISN+EC01-SI3								
		=ISN+EC01-SI4								
		=ISN+EC01-SI5								
		=ISN+EC01-SI6								
		=ISN+EC01-PE2								

BILL OF MATERIALS

2LP8_RICKEL_20

DESIGNATION	AMOUNT	LENGTH	ARTICLE NUMBER	DESIGNATION 1	MANUFACTURER	INTERNAL NO	PAGE / PATH
=AIN+EC01-B1	1		NTC030WP00	PROBE NTC, IP68, WIRE 3m, -50/+105°C	CAREL	903060	&EFS=AIN+EC01/1.3
=AIN+EC01-B1.3	1		NTC030WP00	PROBE NTC, IP68, WIRE 3m, -50/+105°C	CAREL	903060	&EFS=AIN+EC01/1.5
=AIN+EC01-B2	1		NTC060WP00	NTC PROBE, IP68, CABLE 6m, -50/+105°C	CAREL	903061	&EFS=AIN+EC01/1.4
=AIN+EC01-B2.3	1		NTC030WP00	PROBE NTC, IP68, WIRE 3m, -50/+105°C	CAREL	903060	&EFS=AIN+EC01/1.6
=AUA+EC01-DS	1		927206	GR DISPLAY TOUCH BLU-E CHILLER	CAREL	927206	&EFS=AUA+EC01/2.4
=PWC+EC01-F1	1		5SY6214-7	CIRCUIT BREAKER 6KA 2POL C0.3	Siemens	905359	&EFS=PWC+EC01/2.2
=PWC+EC01-F2	1		5SY6214-7	CIRCUIT BREAKER 6KA 2POL C0.3	Siemens	905359	&EFS=PWC+EC01/2.4
=PWC+EC01-F3	1		5SY6202-7	CIRCUIT BREAKER 6KA 2POL C2	Siemens	906346	&EFS=PWC+EC01/2.6
=PWC+EC01-F4	1		5SY6314-7	CIRCUIT BREAKER 6KA 3POL C0.3	Siemens	918236	&EFS=PWC+EC01/2.8
=AUA+EC01-F5	1		5SY6108-7	CIRCUIT BREAKER 6KA 1POL C8	Siemens	907350	&EFS=AUA+EC01/1.1
=AUA+EC01-G2	1		AKAS0036024012	DC/DC CONVERTER 24V/12V 3A	ELMAS	927063	&EFS=AUA+EC01/2.6
+EC01-GND	10			SCREW TC M5x10 ZN-ST 4.8	---	915741	----------
+EC01-GND	31				KELVIN		(AMB.S1)
+EC01-GND_CB	1				KELVIN		(AMB.S1)
+EC01-GND_DO	1			SCREW TE M8X25 ST-ZN	---	207930	(AMB.S1)
+EC01-GND_MP	1			SCREW TE M8X30 ST-ZN	---	206543	(AMB.S1)
=AUA+EC01-K1	1		3RT2027-1AC20	CONTACTOR,AC3:15KW 1NO+1NC AC24V 50/60HZ	Siemens	920111	&EFS=AUA+EC01/2.1
=AUA+EC01-K1	1		3RH29111HA01	AUX. SWITCH BLOCK , 1NC COND. PATHS: 1NC,	Siemens	924271	&EFS=AUA+EC01/2.1
=AUA+EC01-K1	1		3RA2921-1A	MAGN-SWITCH ACC SIEMENS 3RA2921-1A	Siemens	920187	&EFS=AUA+EC01/2.1
=AUA+EC01-K2	1		3RT2027-1AC20	CONTACTOR,AC3:15KW 1NO+1NC AC24V 50/60HZ	Siemens	920111	&EFS=AUA+EC01/2.2
=AUA+EC01-K2	1		3RH29111HA01	AUX. SWITCH BLOCK , 1NC COND. PATHS: 1NC,	Siemens	924271	&EFS=AUA+EC01/2.2
=AUA+EC01-K2	1		3RA2921-1A	MAGN-SWITCH ACC SIEMENS 3RA2921-1A	Siemens	920187	&EFS=AUA+EC01/2.2
=AUA+EC01-K3	1		3RT2015-1AB01	CONTACTOR,AC3:3KW 1NO AC24V 50/60HZ	Siemens	919835	&EFS=AUA+EC01/2.3
=AUA+EC01-K3	1		3RA1921-1D	LINK MODULE F.3RV S00/S0, 3RT S00	Siemens	920186	&EFS=AUA+EC01/2.3
=AUA+EC01-K4	1		3RT2016-1AB01	CONTACTOR,AC3:4KW 1NO AC24V 50/60HZ	Siemens	920015	&EFS=AUA+EC01/2.4
=AUA+EC01-K4	1		3RA1921-1D	LINK MODULE F.3RV S00/S0, 3RT S00	Siemens	920186	&EFS=AUA+EC01/2.4
=AUA+EC01-KA1	1		55.34.8.024.0040	MINIATURE GENERAL PURPOSE RELAY, 4 POLE, 7 A - AC (50/60 HZ) - 24 V	Finder	903668	&EFS=AUA+EC01/1.6
=AUA+EC01-KA1	1		94.74	SOCKET FOR 55.34 RELAY	Finder	903669	&EFS=AUA+EC01/1.6

BILL OF MATERIALS

2LP8_RICKEL_20

DESIGNATION	AMOUNT	LENGTH	ARTICLE NUMBER	DESIGNATION 1	MANUFACTURER	INTERNAL NO	PAGE / PATH
=AIN+EC01-B1	1		NTC030WP00	PROBE NTC, IP68, WIRE 3m, -50/+105°C	CAREL	903060	&EFS=AIN+EC01/1.3
=AIN+EC01-B1.3	1		NTC030WP00	PROBE NTC, IP68, WIRE 3m, -50/+105°C	CAREL	903060	&EFS=AIN+EC01/1.5
=AIN+EC01-B2	1		NTC060WP00	NTC PROBE, IP68, CABLE 6m, -50/+105°C	CAREL	903061	&EFS=AIN+EC01/1.4
=AIN+EC01-B2.3	1		NTC030WP00	PROBE NTC, IP68, WIRE 3m, -50/+105°C	CAREL	903060	&EFS=AIN+EC01/1.6
=AUA+EC01-DS	1		927206	GR DISPLAY TOUCH BLU-E CHILLER	CAREL	927206	&EFS=AUA+EC01/2.4
=PWC+EC01-F1	1		5SY6214-7	CIRCUIT BREAKER 6KA 2POL C0.3	Siemens	905359	&EFS=PWC+EC01/2.2
=PWC+EC01-F2	1		5SY6214-7	CIRCUIT BREAKER 6KA 2POL C0.3	Siemens	905359	&EFS=PWC+EC01/2.4
=PWC+EC01-F3	1		5SY6202-7	CIRCUIT BREAKER 6KA 2POL C2	Siemens	906346	&EFS=PWC+EC01/2.6
=PWC+EC01-F4	1		5SY6314-7	CIRCUIT BREAKER 6KA 3POL C0.3	Siemens	918236	&EFS=PWC+EC01/2.8
=AUA+EC01-F5	1		5SY6108-7	CIRCUIT BREAKER 6KA 1POL C8	Siemens	907350	&EFS=AUA+EC01/1.1
=AUA+EC01-G2	1		AKAS0036024012	DC/DC CONVERTER 24V/12V 3A	ELMAS	927063	&EFS=AUA+EC01/2.6
+EC01-GND	10			SCREW TC M5x10 ZN-ST 4.8	---	915741	----------
+EC01-GND	31				KELVIN		(AMB.S1)
+EC01-GND_CB	1				KELVIN		(AMB.S1)
+EC01-GND_DO	1			SCREW TE M8X25 ST-ZN	---	207930	(AMB.S1)
+EC01-GND_MP	1			SCREW TE M8X30 ST-ZN	---	206543	(AMB.S1)
=AUA+EC01-K1	1		3RT2027-1AC20	CONTACTOR,AC3:15KW 1NO+1NC AC24V 50/60HZ	Siemens	920111	&EFS=AUA+EC01/2.1
=AUA+EC01-K1	1		3RH29111HA01	AUX. SWITCH BLOCK , 1NC COND. PATHS: 1NC,	Siemens	924271	&EFS=AUA+EC01/2.1
=AUA+EC01-K1	1		3RA2921-1A	MAGN-SWITCH ACC SIEMENS 3RA2921-1A	Siemens	920187	&EFS=AUA+EC01/2.1
=AUA+EC01-K2	1		3RT2027-1AC20	CONTACTOR,AC3:15KW 1NO+1NC AC24V 50/60HZ	Siemens	920111	&EFS=AUA+EC01/2.2
=AUA+EC01-K2	1		3RH29111HA01	AUX. SWITCH BLOCK , 1NC COND. PATHS: 1NC,	Siemens	924271	&EFS=AUA+EC01/2.2
=AUA+EC01-K2	1		3RA2921-1A	MAGN-SWITCH ACC SIEMENS 3RA2921-1A	Siemens	920187	&EFS=AUA+EC01/2.2
=AUA+EC01-K3	1		3RT2015-1AB01	CONTACTOR,AC3:3KW 1NO AC24V 50/60HZ	Siemens	919835	&EFS=AUA+EC01/2.3
=AUA+EC01-K3	1		3RA1921-1D	LINK MODULE F.3RV S00/S0, 3RT S00	Siemens	920186	&EFS=AUA+EC01/2.3
=AUA+EC01-K4	1		3RT2016-1AB01	CONTACTOR,AC3:4KW 1NO AC24V 50/60HZ	Siemens	920015	&EFS=AUA+EC01/2.4
=AUA+EC01-K4	1		3RA1921-1D	LINK MODULE F.3RV S00/S0, 3RT S00	Siemens	920186	&EFS=AUA+EC01/2.4
=AUA+EC01-KA1	1		55.34.8.024.0040	MINIATURE GENERAL PURPOSE RELAY, 4 POLE, 7 A - AC (50/60 HZ) - 24 V	Finder	903668	&EFS=AUA+EC01/1.6
=AUA+EC01-KA1	1		94.74	SOCKET FOR 55.34 RELAY	Finder	903669	&EFS=AUA+EC01/1.6

BILL OF MATERIALS

2LP8_RICKEL_20

DESIGNATION	AMOUNT	LENGTH	ARTICLE NUMBER	DESIGNATION 1	MANUFACTURER	INTERNAL NO	PAGE / PATH
=AIN+EC01-B1	1		NTC030WP00	PROBE NTC, IP68, WIRE 3m, -50/+105°C	CAREL	903060	&EFS=AIN+EC01/1.3
=AIN+EC01-B1.3	1		NTC030WP00	PROBE NTC, IP68, WIRE 3m, -50/+105°C	CAREL	903060	&EFS=AIN+EC01/1.5
=AIN+EC01-B2	1		NTC060WP00	NTC PROBE, IP68, CABLE 6m, -50/+105°C	CAREL	903061	&EFS=AIN+EC01/1.4
=AIN+EC01-B2.3	1		NTC030WP00	PROBE NTC, IP68, WIRE 3m, -50/+105°C	CAREL	903060	&EFS=AIN+EC01/1.6
=AUA+EC01-DS	1		927206	GR DISPLAY TOUCH BLU-E CHILLER	CAREL	927206	&EFS=AUA+EC01/2.4
=PWC+EC01-F1	1		5SY6214-7	CIRCUIT BREAKER 6KA 2POL C0.3	Siemens	905359	&EFS=PWC+EC01/2.2
=PWC+EC01-F2	1		5SY6214-7	CIRCUIT BREAKER 6KA 2POL C0.3	Siemens	905359	&EFS=PWC+EC01/2.4
=PWC+EC01-F3	1		5SY6202-7	CIRCUIT BREAKER 6KA 2POL C2	Siemens	906346	&EFS=PWC+EC01/2.6
=PWC+EC01-F4	1		5SY6314-7	CIRCUIT BREAKER 6KA 3POL C0.3	Siemens	918236	&EFS=PWC+EC01/2.8
=AUA+EC01-F5	1		5SY6108-7	CIRCUIT BREAKER 6KA 1POL C8	Siemens	907350	&EFS=AUA+EC01/1.1
=AUA+EC01-G2	1		AKAS0036024012	DC/DC CONVERTER 24V/12V 3A	ELMAS	927063	&EFS=AUA+EC01/2.6
+EC01-GND	10			SCREW TC M5x10 ZN-ST 4.8	---	915741	----------
+EC01-GND	31				KELVIN		(AMB.S1)
+EC01-GND_CB	1				KELVIN		(AMB.S1)
+EC01-GND_DO	1			SCREW TE M8X25 ST-ZN	---	207930	(AMB.S1)
+EC01-GND_MP	1			SCREW TE M8X30 ST-ZN	---	206543	(AMB.S1)
=AUA+EC01-K1	1		3RT2027-1AC20	CONTACTOR,AC3:15KW 1NO+1NC AC24V 50/60HZ	Siemens	920111	&EFS=AUA+EC01/2.1
=AUA+EC01-K1	1		3RH29111HA01	AUX. SWITCH BLOCK , 1NC COND. PATHS: 1NC,	Siemens	924271	&EFS=AUA+EC01/2.1
=AUA+EC01-K1	1		3RA2921-1A	MAGN-SWITCH ACC SIEMENS 3RA2921-1A	Siemens	920187	&EFS=AUA+EC01/2.1
=AUA+EC01-K2	1		3RT2027-1AC20	CONTACTOR,AC3:15KW 1NO+1NC AC24V 50/60HZ	Siemens	920111	&EFS=AUA+EC01/2.2
=AUA+EC01-K2	1		3RH29111HA01	AUX. SWITCH BLOCK , 1NC COND. PATHS: 1NC,	Siemens	924271	&EFS=AUA+EC01/2.2
=AUA+EC01-K2	1		3RA2921-1A	MAGN-SWITCH ACC SIEMENS 3RA2921-1A	Siemens	920187	&EFS=AUA+EC01/2.2
=AUA+EC01-K3	1		3RT2015-1AB01	CONTACTOR,AC3:3KW 1NO AC24V 50/60HZ	Siemens	919835	&EFS=AUA+EC01/2.3
=AUA+EC01-K3	1		3RA1921-1D	LINK MODULE F.3RV S00/S0, 3RT S00	Siemens	920186	&EFS=AUA+EC01/2.3
=AUA+EC01-K4	1		3RT2016-1AB01	CONTACTOR,AC3:4KW 1NO AC24V 50/60HZ	Siemens	920015	&EFS=AUA+EC01/2.4
=AUA+EC01-K4	1		3RA1921-1D	LINK MODULE F.3RV S00/S0, 3RT S00	Siemens	920186	&EFS=AUA+EC01/2.4
=AUA+EC01-KA1	1		55.34.8.024.0040	MINIATURE GENERAL PURPOSE RELAY, 4 POLE, 7 A - AC (50/60 HZ) - 24 V	Finder	903668	&EFS=AUA+EC01/1.6
=AUA+EC01-KA1	1		94.74	SOCKET FOR 55.34 RELAY	Finder	903669	&EFS=AUA+EC01/1.6

BILL OF MATERIALS

2LP8_RICKEL_20

DESIGNATION	AMOUNT	LENGTH	ARTICLE NUMBER	DESIGNATION 1	MANUFACTURER	INTERNAL NO	PAGE / PATH
=AUA+EC01-KA2	1		55.34.8.024.0040	MINIATURE GENERAL PURPOSE RELAY, 4 POLE, 7 A - AC (50/60 HZ) - 24 V	Finder	903668	&EFS=AUA+EC01/1.5
=AUA+EC01-KA2	1		94.74	SOCKET FOR 55.34 RELAY	Finder	903669	&EFS=AUA+EC01/1.5
=AUA+EC01-KA3	1		55.32.8.024.0040	MINIATURE GENERAL PURPOSE RELAY, 2 POLE, 10 A - AC (50/60 HZ) - 24 V	Finder	904571	&EFS=AUA+EC01/1.4
=AUA+EC01-KA3	1		94.82	SOCKET FOR 55.32 RELE'	Finder	904587	&EFS=AUA+EC01/1.4
=AUA+EC01-KA4	1		55.32.8.024.0040	MINIATURE GENERAL PURPOSE RELAY, 2 POLE, 10 A - AC (50/60 HZ) - 24 V	Finder	904571	&EFS=AUA+EC01/1.3
=AUA+EC01-KA4	1		94.82	SOCKET FOR 55.32 RELE'	Finder	904587	&EFS=AUA+EC01/1.3
=AUA+EC01-KA5	1		55.32.8.024.0040	MINIATURE GENERAL PURPOSE RELAY, 2 POLE, 10 A - AC (50/60 HZ) - 24 V	Finder	904571	&EFS=AUA+EC01/1.2
=AUA+EC01-KA5	1		94.82	SOCKET FOR 55.32 RELE'	Finder	904587	&EFS=AUA+EC01/1.2
=PWC+EC01-KG	1		3UG4511-1AP20	PHASE CONTROL RELAY	Siemens	917383	&EFS=PWC+EC01/2.8
+EC01-P1	1		UP3B00200TBM0	TERMOREG PROGRAM CAREL UP3B00200TBM0	CAREL	928216	&EMZ+EC01/1.0
+EC01-P1	1		UP3CON0M00	TERMOREG ACCESS CAREL UP3CON0M00	CAREL	928217	&EMZ+EC01/1.0
+EC01-P1	1		PCO1000WD0	PCOWEB - ETHERNET INTERFACE	CAREL	921648	&EMZ+EC01/1.0
+EC01-P1.1	1		PCOE0004850	EXPANSION BOARD RS485	CAREL	911457	&EMZ+EC01/2.3
+EC01-P1.1	1		PCOECON000	PCOE SCREW PLUGS	CAREL	911569	&EMZ+EC01/2.3
=PWC+EC01-Q0	1		22003008	MANUALLY OPERATED AND MODULAR MULTIPOLAR LOAD BREAK SWITCHES	SOCOMEC	922908	&EFS=PWC+EC01/1.0
=PWC+EC01-Q0	1		1474 1111	RED KNOB TYPE S00	SOCOMEC	921673	&EFS=PWC+EC01/1.0
=PWC+EC01-Q0	1		1407 0532	OPERATING SHAFT 320mm	SOCOMEC	911759	&EFS=PWC+EC01/1.0
=PWC+EC01-Q0	1		2294 3009	3 POLE TERMINALS COVER 63...80	SOCOMEC	922909	&EFS=PWC+EC01/1.0
=PWC+EC01-Q0	1		2200 9009	GROUND POLE 63...80	SOCOMEC	925999	&EFS=PWC+EC01/1.0
=PWC+EC01-Q1	1		3RV2021-4BA15	CIRCUIT-BREAKER SCREW CONNECTION 20A	Siemens	920000	&EFS=PWC+EC01/1.2
=PWC+EC01-Q2	1		3RV2021-4BA15	CIRCUIT-BREAKER SCREW CONNECTION 20A	Siemens	920000	&EFS=PWC+EC01/1.4
=PWC+EC01-Q3	1		3RV2011-1EA15	CIRCUIT-BREAKER SCREW CONNECTION 4A	Siemens	919837	&EFS=PWC+EC01/1.5
=PWC+EC01-Q4	1		3RV2011-1HA15	CIRCUIT-BREAKER SCREW CONNECTION 8A	Siemens	919991	&EFS=PWC+EC01/1.7
=PWC+EC01-Q4	1		3RV2925-5AB	3-PHASE INFEED TERMINAL SZ S0/S00	Siemens	920185	&EFS=PWC+EC01/1.7
=PWC+EC01-T1	1		TCN80000200.057	200VA 0-230-400-415-440-460-480/0-24	TECNOCABLAGGI	905560	&EFS=PWC+EC01/2.6
=AUA+EC01-TCONN	1		TCONN6J000	TRANSMISSION BOARD FOR PGD DISPLAY	CAREL	911363	&EFS=AUA+EC01/2.5
-U1	1		1058000	AX Compact enclosure, WHD: 600x800x250 mm, sheet steel	Rittal	1058000	(AMB.S1)
-U2	1	0,545m		WIRING DUCT 40x80 PLASTIC 4X6	---	909700	(AMB.S1)

BILL OF MATERIALS

2LP8_RICKEL_20

DESIGNATION	AMOUNT	LENGTH	ARTICLE NUMBER	DESIGNATION 1	MANUFACTURER	INTERNAL NO	PAGE / PATH
-U3	1	0,545m		WIRING DUCT 40x80 PLASTIC 4X6	---	909700	(AMB.S1)
-U4	1	0,425m		WIRING DUCT 40x80 PLASTIC 4X6	---	909700	(AMB.S1)
-U5	1	0,325m	2313750	SZ Support rail to EN 60 715, version TS 35/7,5, L: 2000 mm	Rittal	2313750	(AMB.S1)
-U6	1	0,325m		WIRING DUCT 40x80 PLASTIC 4X6	---	909700	(AMB.S1)
-U7	1	0,325m	2313750	SZ Support rail to EN 60 715, version TS 35/7,5, L: 2000 mm	Rittal	2313750	(AMB.S1)
-U8	1			STAND OFFS H MxF L20 M6 ZN-ST	---	904235	(AMB.S1)
-U9	1			STAND OFFS H MxF L20 M6 ZN-ST	---	904235	(AMB.S1)
-U12	1			STAND OFFS H MxF L20 M6 ZN-ST	---	904235	(AMB.S1)
-U13	1			STAND OFFS H MxF L20 M6 ZN-ST	---	904235	(AMB.S1)
-U14	1	0,255m	2313750	SZ Support rail to EN 60 715, version TS 35/7,5, L: 2000 mm	Rittal	2313750	(AMB.S1)
-U15	1	0,255m	2313750	SZ Support rail to EN 60 715, version TS 35/7,5, L: 2000 mm	Rittal	2313750	(AMB.S1)
-U50	1		249-116	Screwless end stop	WAGO	904502	(AMB.S1)
-U51	1		249-116	Screwless end stop	WAGO	904502	(AMB.S1)
-U136	1		2564300	SZ Plastic gland plates, Size 4	Rittal	2564300	(AMB.S1)
-U137	1			STAND OFFS H FxF 19x25x5 PE	---	909454	(AMB.S1)
-U138	1			STAND OFFS H FxF 19x25x5 PE	---	909454	(AMB.S1)
-U234	1			STAND OFFS H MxF L20 M6 ZN-ST	---	904235	(AMB.S1)
-U235	1			STAND OFFS H MxF L20 M6 ZN-ST	---	904235	(AMB.S1)
-U236	1	0,425m		DIN RAIL OMEGA 35x7,5	---	905499	(AMB.S1)
=AUA+EC01-V1	1		3RT29261BB00	SURGE SUPPRESSOR, VARISTOR,	Siemens	919431	&EFS=AUA+EC01/2.1
=AUA+EC01-V2	1		3RT29261BB00	SURGE SUPPRESSOR, VARISTOR,	Siemens	919431	&EFS=AUA+EC01/2.2
=AUA+EC01-V3	1		3RT29161BB00	SURGE SUPPRESSOR, VARISTOR,	Siemens	919432	&EFS=AUA+EC01/2.3
=AUA+EC01-V4	1		3RT29161BB00	SURGE SUPPRESSOR, VARISTOR,	Siemens	919432	&EFS=AUA+EC01/2.4
-W1	1	0,56m		CU BAR 12X3	---	909453	(AMB.S1)
=PWC+EC01-WQD	1		3RV1915-1CB	3-PHASE BUSBARS	Siemens	909358	&EFS=PWC+EC01/1.2
+EC01-X2	1		249-116	Screwless end stop	WAGO	904502	
+EC01-X2	2		280-309	End and intermediate plate	WAGO	904525	&EFS=ISN+EC01/1.5
+EC01-X2	30		280-901	2-conductor through terminal block	WAGO	903680	

BILL OF MATERIALS

2LP8_RICKEL_20

DESIGNATION	AMOUNT	LENGTH	ARTICLE NUMBER	DESIGNATION 1	MANUFACTURER	INTERNAL NO	PAGE / PATH
+EC01-X3	4		280-901	2-conductor through terminal block	WAGO	903680	&EFS=PWC+EC01/2.2;&EFS=PWC+EC01/2.4
+EC01-X3	1		249-116	Screwless end stop	WAGO	904502	&EFS=PWC+EC01/2.4
+EC01-X10	1		280-907	2-conductor ground terminal block	WAGO	903864	&EFS=AUA+EC01/4.2
=AUA+EC01-Z1	1		0475178281	FERRITE CABLE 21X21X39.4	FAIR-RITE	927281	&EFS=AUA+EC01/1.0

BILL OF MATERIALS

2LP8_RICKEL_20

DESIGNATION	AMOUNT	LENGTH	ARTICLE NUMBER	DESIGNATION 1	MANUFACTURER	INTERNAL NO	PAGE / PATH
=AUA+EC01-KA2	1		55.34.8.024.0040	MINIATURE GENERAL PURPOSE RELAY, 4 POLE, 7 A - AC (50/60 HZ) - 24 V	Finder	903668	&EFS=AUA+EC01/1.5
=AUA+EC01-KA2	1		94.74	SOCKET FOR 55.34 RELAY	Finder	903669	&EFS=AUA+EC01/1.5
=AUA+EC01-KA3	1		55.32.8.024.0040	MINIATURE GENERAL PURPOSE RELAY, 2 POLE, 10 A - AC (50/60 HZ) - 24 V	Finder	904571	&EFS=AUA+EC01/1.4
=AUA+EC01-KA3	1		94.82	SOCKET FOR 55.32 RELE'	Finder	904587	&EFS=AUA+EC01/1.4
=AUA+EC01-KA4	1		55.32.8.024.0040	MINIATURE GENERAL PURPOSE RELAY, 2 POLE, 10 A - AC (50/60 HZ) - 24 V	Finder	904571	&EFS=AUA+EC01/1.3
=AUA+EC01-KA4	1		94.82	SOCKET FOR 55.32 RELE'	Finder	904587	&EFS=AUA+EC01/1.3
=AUA+EC01-KA5	1		55.32.8.024.0040	MINIATURE GENERAL PURPOSE RELAY, 2 POLE, 10 A - AC (50/60 HZ) - 24 V	Finder	904571	&EFS=AUA+EC01/1.2
=AUA+EC01-KA5	1		94.82	SOCKET FOR 55.32 RELE'	Finder	904587	&EFS=AUA+EC01/1.2
=PWC+EC01-KG	1		3UG4511-1AP20	PHASE CONTROL RELAY	Siemens	917383	&EFS=PWC+EC01/2.8
+EC01-P1	1		UP3B00200TBM0	TERMOREG PROGRAM CAREL UP3B00200TBM0	CAREL	928216	&EMZ+EC01/1.0
+EC01-P1	1		UP3CON0M00	TERMOREG ACCESS CAREL UP3CON0M00	CAREL	928217	&EMZ+EC01/1.0
+EC01-P1	1		PCO1000WD0	PCOWEB - ETHERNET INTERFACE	CAREL	921648	&EMZ+EC01/1.0
+EC01-P1.1	1		PCOE0004850	EXPANSION BOARD RS485	CAREL	911457	&EMZ+EC01/2.3
+EC01-P1.1	1		PCOECON000	PCOE SCREW PLUGS	CAREL	911569	&EMZ+EC01/2.3
=PWC+EC01-Q0	1		22003008	MANUALLY OPERATED AND MODULAR MULTIPOLAR LOAD BREAK SWITCHES	SOCOMEC	922908	&EFS=PWC+EC01/1.0
=PWC+EC01-Q0	1		1474 1111	RED KNOB TYPE S00	SOCOMEC	921673	&EFS=PWC+EC01/1.0
=PWC+EC01-Q0	1		1407 0532	OPERATING SHAFT 320mm	SOCOMEC	911759	&EFS=PWC+EC01/1.0
=PWC+EC01-Q0	1		2294 3009	3 POLE TERMINALS COVER 63...80	SOCOMEC	922909	&EFS=PWC+EC01/1.0
=PWC+EC01-Q0	1		2200 9009	GROUND POLE 63...80	SOCOMEC	925999	&EFS=PWC+EC01/1.0
=PWC+EC01-Q1	1		3RV2021-4BA15	CIRCUIT-BREAKER SCREW CONNECTION 20A	Siemens	920000	&EFS=PWC+EC01/1.2
=PWC+EC01-Q2	1		3RV2021-4BA15	CIRCUIT-BREAKER SCREW CONNECTION 20A	Siemens	920000	&EFS=PWC+EC01/1.4
=PWC+EC01-Q3	1		3RV2011-1EA15	CIRCUIT-BREAKER SCREW CONNECTION 4A	Siemens	919837	&EFS=PWC+EC01/1.5
=PWC+EC01-Q4	1		3RV2011-1HA15	CIRCUIT-BREAKER SCREW CONNECTION 8A	Siemens	919991	&EFS=PWC+EC01/1.7
=PWC+EC01-Q4	1		3RV2925-5AB	3-PHASE INFEED TERMINAL SZ S0/S00	Siemens	920185	&EFS=PWC+EC01/1.7
=PWC+EC01-T1	1		TCN80000200.057	200VA 0-230-400-415-440-460-480/0-24	TECNOCABLAGGI	905560	&EFS=PWC+EC01/2.6
=AUA+EC01-TCONN	1		TCONN6J000	TRANSMISSION BOARD FOR PGD DISPLAY	CAREL	911363	&EFS=AUA+EC01/2.5
-U1	1		1058000	AX Compact enclosure, WHD: 600x800x250 mm, sheet steel	Rittal	1058000	(AMB.S1)
-U2	1	0,545m		WIRING DUCT 40x80 PLASTIC 4X6	---	909700	(AMB.S1)

BILL OF MATERIALS

2LP8_RICKEL_20

DESIGNATION	AMOUNT	LENGTH	ARTICLE NUMBER	DESIGNATION 1	MANUFACTURER	INTERNAL NO	PAGE / PATH
-U3	1	0,545m		WIRING DUCT 40x80 PLASTIC 4X6	---	909700	(AMB.S1)
-U4	1	0,425m		WIRING DUCT 40x80 PLASTIC 4X6	---	909700	(AMB.S1)
-U5	1	0,325m	2313750	SZ Support rail to EN 60 715, version TS 35/7,5, L: 2000 mm	Rittal	2313750	(AMB.S1)
-U6	1	0,325m		WIRING DUCT 40x80 PLASTIC 4X6	---	909700	(AMB.S1)
-U7	1	0,325m	2313750	SZ Support rail to EN 60 715, version TS 35/7,5, L: 2000 mm	Rittal	2313750	(AMB.S1)
-U8	1			STAND OFFS H MxF L20 M6 ZN-ST	---	904235	(AMB.S1)
-U9	1			STAND OFFS H MxF L20 M6 ZN-ST	---	904235	(AMB.S1)
-U12	1			STAND OFFS H MxF L20 M6 ZN-ST	---	904235	(AMB.S1)
-U13	1			STAND OFFS H MxF L20 M6 ZN-ST	---	904235	(AMB.S1)
-U14	1	0,255m	2313750	SZ Support rail to EN 60 715, version TS 35/7,5, L: 2000 mm	Rittal	2313750	(AMB.S1)
-U15	1	0,255m	2313750	SZ Support rail to EN 60 715, version TS 35/7,5, L: 2000 mm	Rittal	2313750	(AMB.S1)
-U50	1		249-116	Screwless end stop	WAGO	904502	(AMB.S1)
-U51	1		249-116	Screwless end stop	WAGO	904502	(AMB.S1)
-U136	1		2564300	SZ Plastic gland plates, Size 4	Rittal	2564300	(AMB.S1)
-U137	1			STAND OFFS H FxF 19x25x5 PE	---	909454	(AMB.S1)
-U138	1			STAND OFFS H FxF 19x25x5 PE	---	909454	(AMB.S1)
-U234	1			STAND OFFS H MxF L20 M6 ZN-ST	---	904235	(AMB.S1)
-U235	1			STAND OFFS H MxF L20 M6 ZN-ST	---	904235	(AMB.S1)
-U236	1	0,425m		DIN RAIL OMEGA 35x7,5	---	905499	(AMB.S1)
=AUA+EC01-V1	1		3RT29261BB00	SURGE SUPPRESSOR, VARISTOR,	Siemens	919431	&EFS=AUA+EC01/2.1
=AUA+EC01-V2	1		3RT29261BB00	SURGE SUPPRESSOR, VARISTOR,	Siemens	919431	&EFS=AUA+EC01/2.2
=AUA+EC01-V3	1		3RT29161BB00	SURGE SUPPRESSOR, VARISTOR,	Siemens	919432	&EFS=AUA+EC01/2.3
=AUA+EC01-V4	1		3RT29161BB00	SURGE SUPPRESSOR, VARISTOR,	Siemens	919432	&EFS=AUA+EC01/2.4
-W1	1	0,56m		CU BAR 12X3	---	909453	(AMB.S1)
=PWC+EC01-WQD	1		3RV1915-1CB	3-PHASE BUSBARS	Siemens	909358	&EFS=PWC+EC01/1.2
+EC01-X2	1		249-116	Screwless end stop	WAGO	904502	
+EC01-X2	2		280-309	End and intermediate plate	WAGO	904525	&EFS=ISN+EC01/1.5
+EC01-X2	30		280-901	2-conductor through terminal block	WAGO	903680	

BILL OF MATERIALS

2LP8_RICKEL_20

DESIGNATION	AMOUNT	LENGTH	ARTICLE NUMBER	DESIGNATION 1	MANUFACTURER	INTERNAL NO	PAGE / PATH
+EC01-X3	4		280-901	2-conductor through terminal block	WAGO	903680	&EFS=PWC+EC01/2.2;&EFS=PWC+EC01/2.4
+EC01-X3	1		249-116	Screwless end stop	WAGO	904502	&EFS=PWC+EC01/2.4
+EC01-X10	1		280-907	2-conductor ground terminal block	WAGO	903864	&EFS=AUA+EC01/4.2
=AUA+EC01-Z1	1		0475178281	FERRITE CABLE 21X21X39.4	FAIR-RITE	927281	&EFS=AUA+EC01/1.0

BILL OF MATERIALS

2LP8_RICKEL_20

DESIGNATION	AMOUNT	LENGTH	ARTICLE NUMBER	DESIGNATION 1	MANUFACTURER	INTERNAL NO	PAGE / PATH
=AUA+EC01-KA2	1		55.34.8.024.0040	MINIATURE GENERAL PURPOSE RELAY, 4 POLE, 7 A - AC (50/60 HZ) - 24 V	Finder	903668	&EFS=AUA+EC01/1.5
=AUA+EC01-KA2	1		94.74	SOCKET FOR 55.34 RELAY	Finder	903669	&EFS=AUA+EC01/1.5
=AUA+EC01-KA3	1		55.32.8.024.0040	MINIATURE GENERAL PURPOSE RELAY, 2 POLE, 10 A - AC (50/60 HZ) - 24 V	Finder	904571	&EFS=AUA+EC01/1.4
=AUA+EC01-KA3	1		94.82	SOCKET FOR 55.32 RELE'	Finder	904587	&EFS=AUA+EC01/1.4
=AUA+EC01-KA4	1		55.32.8.024.0040	MINIATURE GENERAL PURPOSE RELAY, 2 POLE, 10 A - AC (50/60 HZ) - 24 V	Finder	904571	&EFS=AUA+EC01/1.3
=AUA+EC01-KA4	1		94.82	SOCKET FOR 55.32 RELE'	Finder	904587	&EFS=AUA+EC01/1.3
=AUA+EC01-KA5	1		55.32.8.024.0040	MINIATURE GENERAL PURPOSE RELAY, 2 POLE, 10 A - AC (50/60 HZ) - 24 V	Finder	904571	&EFS=AUA+EC01/1.2
=AUA+EC01-KA5	1		94.82	SOCKET FOR 55.32 RELE'	Finder	904587	&EFS=AUA+EC01/1.2
=PWC+EC01-KG	1		3UG4511-1AP20	PHASE CONTROL RELAY	Siemens	917383	&EFS=PWC+EC01/2.8
+EC01-P1	1		UP3B00200TBM0	TERMOREG PROGRAM CAREL UP3B00200TBM0	CAREL	928216	&EMZ+EC01/1.0
+EC01-P1	1		UP3CON0M00	TERMOREG ACCESS CAREL UP3CON0M00	CAREL	928217	&EMZ+EC01/1.0
+EC01-P1	1		PCO1000WD0	PCOWEB - ETHERNET INTERFACE	CAREL	921648	&EMZ+EC01/1.0
+EC01-P1.1	1		PCOE0004850	EXPANSION BOARD RS485	CAREL	911457	&EMZ+EC01/2.3
+EC01-P1.1	1		PCOECON000	PCOE SCREW PLUGS	CAREL	911569	&EMZ+EC01/2.3
=PWC+EC01-Q0	1		22003008	MANUALLY OPERATED AND MODULAR MULTIPOLAR LOAD BREAK SWITCHES	SOCOMEC	922908	&EFS=PWC+EC01/1.0
=PWC+EC01-Q0	1		1474 1111	RED KNOB TYPE S00	SOCOMEC	921673	&EFS=PWC+EC01/1.0
=PWC+EC01-Q0	1		1407 0532	OPERATING SHAFT 320mm	SOCOMEC	911759	&EFS=PWC+EC01/1.0
=PWC+EC01-Q0	1		2294 3009	3 POLE TERMINALS COVER 63...80	SOCOMEC	922909	&EFS=PWC+EC01/1.0
=PWC+EC01-Q0	1		2200 9009	GROUND POLE 63...80	SOCOMEC	925999	&EFS=PWC+EC01/1.0
=PWC+EC01-Q1	1		3RV2021-4BA15	CIRCUIT-BREAKER SCREW CONNECTION 20A	Siemens	920000	&EFS=PWC+EC01/1.2
=PWC+EC01-Q2	1		3RV2021-4BA15	CIRCUIT-BREAKER SCREW CONNECTION 20A	Siemens	920000	&EFS=PWC+EC01/1.4
=PWC+EC01-Q3	1		3RV2011-1EA15	CIRCUIT-BREAKER SCREW CONNECTION 4A	Siemens	919837	&EFS=PWC+EC01/1.5
=PWC+EC01-Q4	1		3RV2011-1HA15	CIRCUIT-BREAKER SCREW CONNECTION 8A	Siemens	919991	&EFS=PWC+EC01/1.7
=PWC+EC01-Q4	1		3RV2925-5AB	3-PHASE INFEED TERMINAL SZ S0/S00	Siemens	920185	&EFS=PWC+EC01/1.7
=PWC+EC01-T1	1		TCN80000200.057	200VA 0-230-400-415-440-460-480/0-24	TECNOCABLAGGI	905560	&EFS=PWC+EC01/2.6
=AUA+EC01-TCONN	1		TCONN6J000	TRANSMISSION BOARD FOR PGD DISPLAY	CAREL	911363	&EFS=AUA+EC01/2.5
-U1	1		1058000	AX Compact enclosure, WHD: 600x800x250 mm, sheet steel	Rittal	1058000	(AMB.S1)
-U2	1	0,545m		WIRING DUCT 40x80 PLASTIC 4X6	---	909700	(AMB.S1)

BILL OF MATERIALS

2LP8_RICKEL_20

DESIGNATION	AMOUNT	LENGTH	ARTICLE NUMBER	DESIGNATION 1	MANUFACTURER	INTERNAL NO	PAGE / PATH
-U3	1	0,545m		WIRING DUCT 40x80 PLASTIC 4X6	---	909700	(AMB.S1)
-U4	1	0,425m		WIRING DUCT 40x80 PLASTIC 4X6	---	909700	(AMB.S1)
-U5	1	0,325m	2313750	SZ Support rail to EN 60 715, version TS 35/7,5, L: 2000 mm	Rittal	2313750	(AMB.S1)
-U6	1	0,325m		WIRING DUCT 40x80 PLASTIC 4X6	---	909700	(AMB.S1)
-U7	1	0,325m	2313750	SZ Support rail to EN 60 715, version TS 35/7,5, L: 2000 mm	Rittal	2313750	(AMB.S1)
-U8	1			STAND OFFS H MxF L20 M6 ZN-ST	---	904235	(AMB.S1)
-U9	1			STAND OFFS H MxF L20 M6 ZN-ST	---	904235	(AMB.S1)
-U12	1			STAND OFFS H MxF L20 M6 ZN-ST	---	904235	(AMB.S1)
-U13	1			STAND OFFS H MxF L20 M6 ZN-ST	---	904235	(AMB.S1)
-U14	1	0,255m	2313750	SZ Support rail to EN 60 715, version TS 35/7,5, L: 2000 mm	Rittal	2313750	(AMB.S1)
-U15	1	0,255m	2313750	SZ Support rail to EN 60 715, version TS 35/7,5, L: 2000 mm	Rittal	2313750	(AMB.S1)
-U50	1		249-116	Screwless end stop	WAGO	904502	(AMB.S1)
-U51	1		249-116	Screwless end stop	WAGO	904502	(AMB.S1)
-U136	1		2564300	SZ Plastic gland plates, Size 4	Rittal	2564300	(AMB.S1)
-U137	1			STAND OFFS H FxF 19x25x5 PE	---	909454	(AMB.S1)
-U138	1			STAND OFFS H FxF 19x25x5 PE	---	909454	(AMB.S1)
-U234	1			STAND OFFS H MxF L20 M6 ZN-ST	---	904235	(AMB.S1)
-U235	1			STAND OFFS H MxF L20 M6 ZN-ST	---	904235	(AMB.S1)
-U236	1	0,425m		DIN RAIL OMEGA 35x7,5	---	905499	(AMB.S1)
=AUA+EC01-V1	1		3RT29261BB00	SURGE SUPPRESSOR, VARISTOR,	Siemens	919431	&EFS=AUA+EC01/2.1
=AUA+EC01-V2	1		3RT29261BB00	SURGE SUPPRESSOR, VARISTOR,	Siemens	919431	&EFS=AUA+EC01/2.2
=AUA+EC01-V3	1		3RT29161BB00	SURGE SUPPRESSOR, VARISTOR,	Siemens	919432	&EFS=AUA+EC01/2.3
=AUA+EC01-V4	1		3RT29161BB00	SURGE SUPPRESSOR, VARISTOR,	Siemens	919432	&EFS=AUA+EC01/2.4
-W1	1	0,56m		CU BAR 12X3	---	909453	(AMB.S1)
=PWC+EC01-WQD	1		3RV1915-1CB	3-PHASE BUSBARS	Siemens	909358	&EFS=PWC+EC01/1.2
+EC01-X2	1		249-116	Screwless end stop	WAGO	904502	
+EC01-X2	2		280-309	End and intermediate plate	WAGO	904525	&EFS=ISN+EC01/1.5
+EC01-X2	30		280-901	2-conductor through terminal block	WAGO	903680	

CREATED BY FF2 ON THE 25/02/2022

REVISOR ON THE LAST REVISION

RITTAL GmbH & Co. KG

SK3336.470
KRAE0320TT00V000EG
BILL OF MATERIAL

DRAWING NUMBER EP22016

CABINET CODE

&EPC = +

EPLAN Electric P8 2022.0.3
2LP8_CARTRIT_ST
PAGES COUNTER 35
NUMBER OF PAGES 36
11

BILL OF MATERIALS

2LP8_RICKEL_20

DESIGNATION	AMOUNT	LENGTH	ARTICLE NUMBER	DESIGNATION 1	MANUFACTURER	INTERNAL NO	PAGE / PATH
+EC01-X3	4		280-901	2-conductor through terminal block	WAGO	903680	&EFS=PWC+EC01/2.2;&EFS=PWC+EC01/2.4
+EC01-X3	1		249-116	Screwless end stop	WAGO	904502	&EFS=PWC+EC01/2.4
+EC01-X10	1		280-907	2-conductor ground terminal block	WAGO	903864	&EFS=AUA+EC01/4.2
=AUA+EC01-Z1	1		0475178281	FERRITE CABLE 21X21X39.4	FAIR-RITE	927281	&EFS=AUA+EC01/1.0