Rittal – The System.

Faster – better – worldwide.

Technical details – Catalogue 33 and Innovations 2012

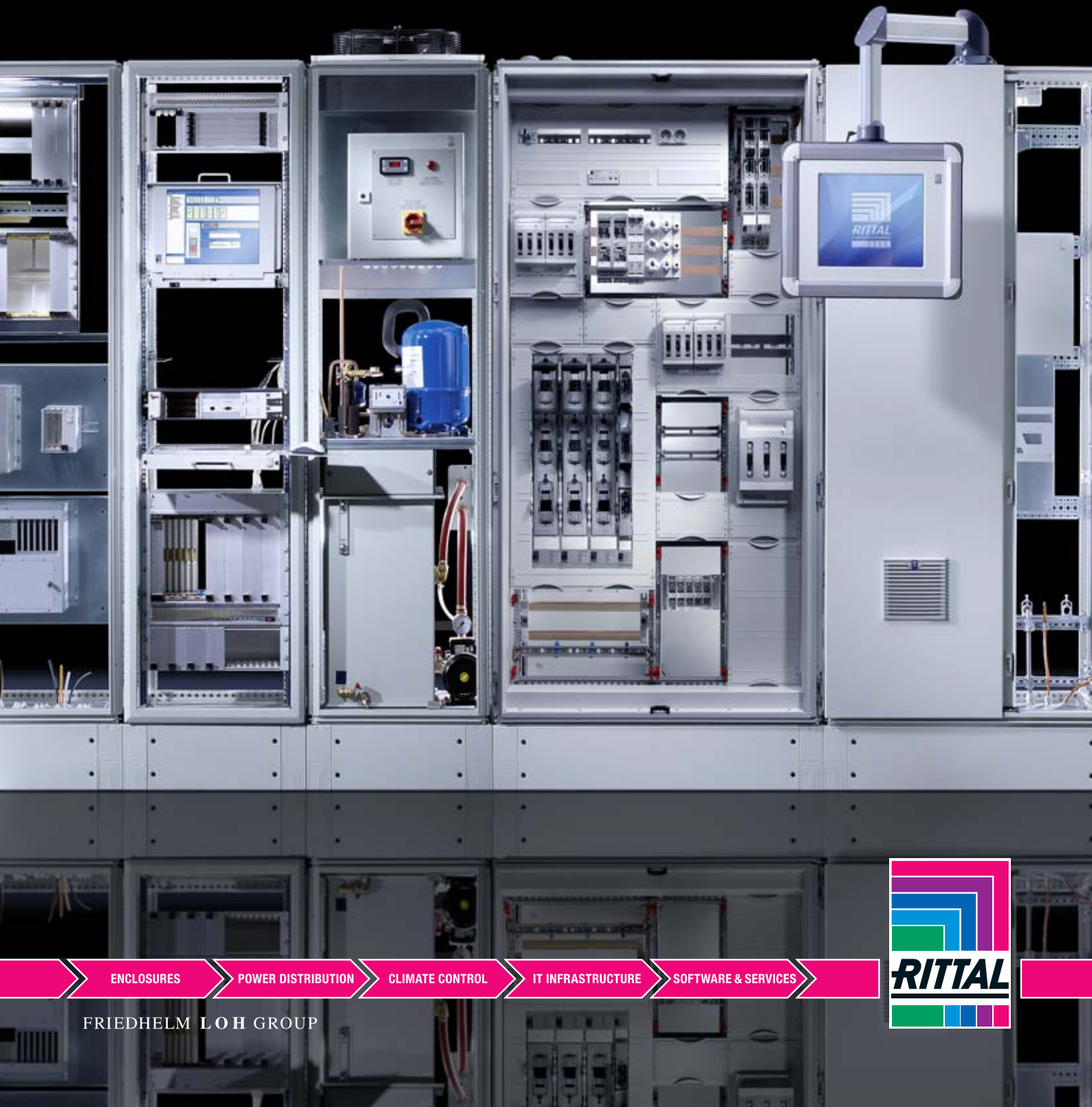

ENCLOSURES | POWER DISTRIBUTION | CLIMATE CONTROL | IT INFRASTRUCTURE | SOFTWARE & SERVICES

FRIEDHELM LOH GROUP

Contents

Catalogue 33

Enclosures

Page
Small enclosures ... 3
Compact enclosures ... 10
Wall-mounted network enclosures ... 16
Enclosure systems ... 26
Network distribution enclosures ... 39
Server enclosures ... 48
Console systems ... 56
PC enclosure systems ... 60
Industrial Workstations ... 62
Comfort Panel ... 65
Optipanel ... 69
Operating housings ... 74
Support arm systems ... 76
Stand systems ... 99
Hygienic Design ... 103
Stainless steel ... 105
Ex enclosures ... 114
Outdoor enclosures ... 118
Electronic Packaging
– Subracks ... 123
– System enclosures ... 143
– Instrument cases ... 144

Power distribution

Technical information ... 146
Busbar systems
– Mini-PLS ... 175
– RiLine60 ... 178
– RiLine NH ... 193
– RiLine Class ... 203
– RiLine accessories ... 205
Ri4Power Form 1-4
– Maxi-PLS ... 215
– Flat-PLS ... 218
Ri4Power ISV distribution enclosures ... 224
Power
– UPS – Power Modular Concept ... 225
– Power System Module ... 234

Climate control

Page
Cooling with ambient air
– Fan systems ... 238
– Air/air heat exchangers ... 241
Cooling units
– Thermoelectric cooler ... 247
– Wall-mounted cooling units ... 247
– Roof-mounted cooling units ... 251
– Modular climate control concept ... 252
Liquid cooling
– Air/water heat exchangers ... 254
– Liquid-cooled partial mounting plate ... 259
– Chillers for water ... 260
IT cooling
– Chillers for IT cooling ... 265
Enclosure heaters ... 266
Climate control accessories ... 267
Approvals ... 268

IT infrastructure

Security solutions
– Basic Safe ... 275
– Modular Safe/Modular Safe Extend ... 276
– Data Centre Container DCC ... 278
– Rack extinguisher system ... 279

System accessories

Enclosures
– Base ... 281
– Walls ... 284
– Interior installation ... 285
– Baying system ... 286
– Rail systems ... 287
– Power supply ... 291
– 482.6 mm (19″) installation system ... 293
Monitoring
– Connection examples – KVM switches ... 301
Human/machine interface
– Monitors ... 302

Innovations 2012

Network/server enclosures TS IT ... 2
Support arm system 60/120/180 ... 6
RiLine60 fuse elements ... 17
RiLine60 component adaptors ... 19
RiLine NH fuse elements ... 23
Ri4Power distribution enclosures ... 25
PDU – Power Distribution Unit ... 26
PSM – Power System Modul ... 28

Polycarbonate enclosures PK

with cable gland Catalogue 33, page 30

Model No. PK with cable gland	H1	H2	H3	H4	H5
9530.000	52	47	40	39.4	30.4
9531.000	65	60	53	52.4	43.4

1 Does not apply to PK 9531.000

2 Does not apply to PK 9530.000

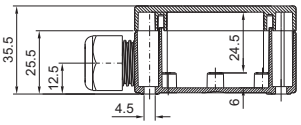

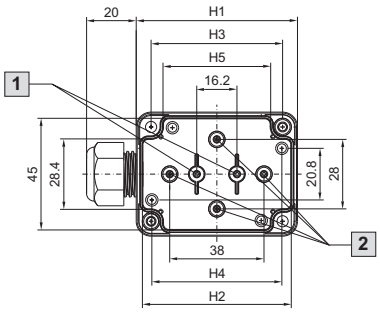

Polycarbonate enclosures PK

Catalogue 33, page 28

Version A

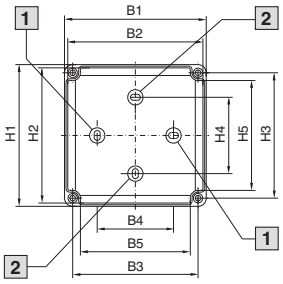

1 Does not apply to PK 9500.XXX, PK 9501.XXX

2 Does not apply to PK 9502.XXX, PK 9503.XXX

Version B

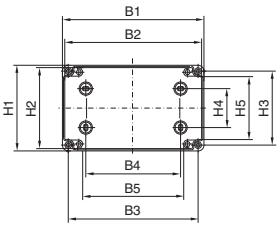

B1 = Enclosure width
B2 = Configurable width
B3 = Centre/centre wall mounting outside of seal
B4 = Centre/centre wall mounting inside the enclosure
B5 = Clearance width

Version C

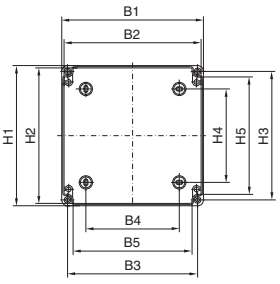

H1 = Enclosure height
H2 = Configurable height
H3 = Centre/centre wall mounting outside of seal
H4 = Centre/centre wall mounting inside the enclosure
H5 = Clearance height

Version D

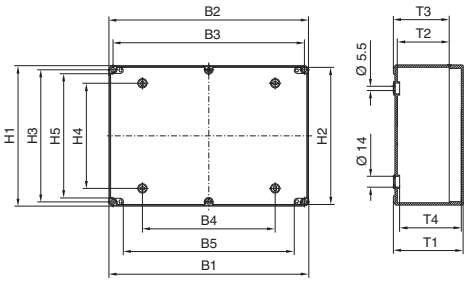

T1 = Overall depth
T2 = Configurable enclosure depth
T3 = Enclosure depth
T4 = Clearance height available for installation

Model No. PK	Design	Width dimensions mm					Height dimensions mm					Depth dimensions mm			
		B1	B2	B3	B4	B5	H1	H2	H3	H4	H5	T1	T2	T3	T4
9500.XXX	A	65	59	50	–	36	65	59	50	25	36	57	33	41	45
9502.XXX	A	94	88	79	50	64	65	59	50	–	36	57	33	41	45
9504.XXX	A	94	88	79	50	64	94	88	79	50	64	57	33	41	45
9505.XXX	A	94	88	79	50	64	94	88	79	50	64	81	33	41	69
9506.XXX	A	110	104	95	65	80	110	104	95	65	80	66	42	50	53
9507.XXX	A	110	104	95	65	80	110	104	95	65	80	90	42	50	77
9508.XXX	A	130	124	115	90	101	94	88	79	50	64	57	33	41	45
9509.XXX	A	130	124	115	90	101	94	88	79	50	64	81	33	41	69
9510.XXX	A	130	124	115	70	101	130	124	115	70	101	75	51	59	63
9511.XXX	A	130	124	115	70	101	130	124	115	70	101	99	51	59	87
9512.XXX	B	180	174	165	120	150	94	88	79	50	64	57	33	41	45
9513.XXX	B	180	174	165	120	150	94	88	79	50	64	81	33	41	69
9514.XXX	B	180	173	165	120	128	110	103	95	50	80	90	63	71	75
9515.XXX	B	180	173	165	120	128	110	103	95	50	80	111	63	71	97
9516.XXX[1)]	B	180	173	165	120	128	110	103	95	50	80	165	63	71	150
9517.XXX	C	182	175	167	120	152	180	173	165	120	128	90	63	71	75
9518.XXX	C	182	175	167	120	152	180	173	165	120	128	111	63	71	97
9519.XXX[1)]	C	182	175	167	120	152	180	173	165	120	128	165	63	71	150
9520.XXX	C	254	247	239	190	224	180	173	165	120	128	90	63	71	75
9521.XXX	C	254	247	239	190	224	180	173	165	120	128	111	63	71	97
9522.XXX[1)]	C	254	247	239	190	224	180	173	165	120	128	165	63	71	150
9523.XXX	D	361	355	346	240	309	254	248	239	190	224	111	63	71	97
9524.XXX[1)]	D	361	355	346	240	309	254	248	239	190	224	165	63	71	150

[1)] Version .000, .100 with slanted lid

Small enclosures

Polycarbonate enclosures PK

With metric knockouts Catalogue 33, page 28

Enclosure hole pattern:

PK 9500.050 PK 9508.050 PK 9514.050 PK 9521.050

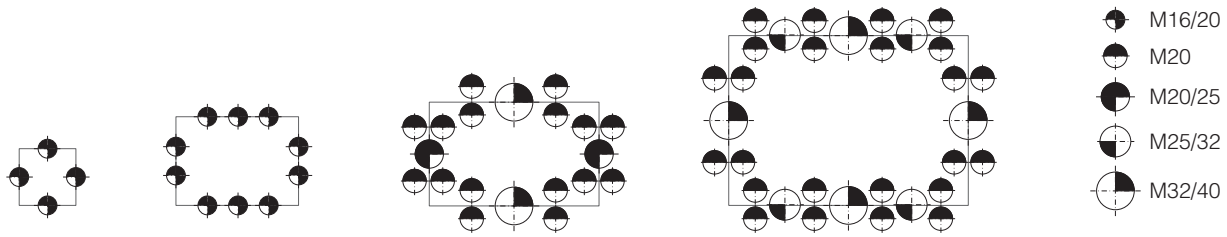

Cast aluminium enclosures GA

Catalogue 33, page 32

Version A

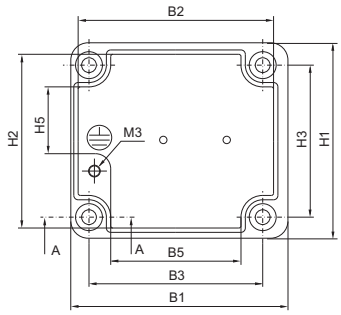

Version B

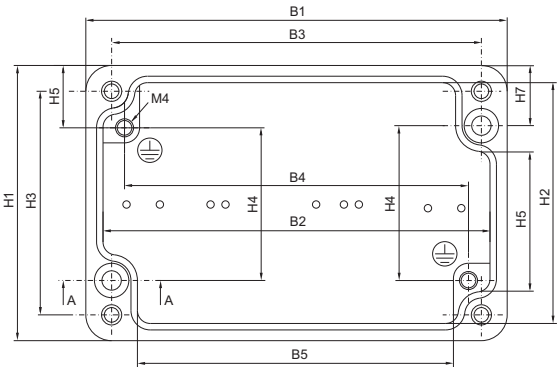

Section A – A

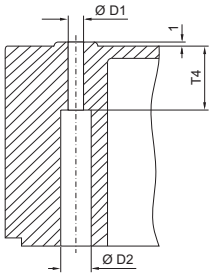

Version C

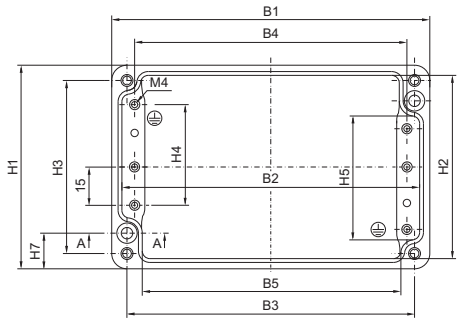

Version D

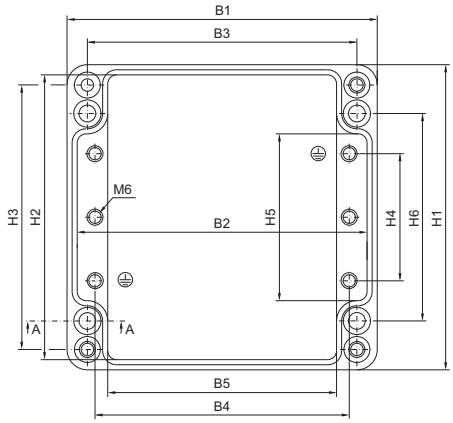

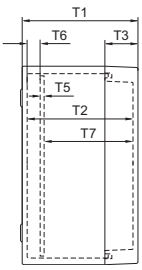

Note:
For installations manufactured by the customer, the width and height dimensions of the mounting plate must not be exceeded.
For enclosures where no mounting plate is available, the following dimensions shall apply analogously:

Model No. GA	Width mm	Height mm
9100.210	43	38
9101.210	48	54
9102.210	88	54
9103.210	140	54
9104.210	64	69
9106.210	164	69
9107.210	239	69
9111.210	347	107

Model No. GA	Design	Width dimensions mm					Height dimensions mm							Depth dimensions mm							Diameter mm	
		B1	B2	B3	B4	B5	H1	H2	H3	H4	H5	H6	H7	T1	T2	T3	T4	T5	T6	T7	D1	D2
9100.210	A	50	45	40	–	30	45	40	35	–	18	–	–	30	25	6	5	–	–	–	4.3	7
9101.210	B	58	50	46	40	34	64	56	52	33	32	–	14	34	29	9	8	–	–	–	4.5	8
9102.210	B	98	90	86	81	74	64	57	52	33	32	–	14	35	29	10	8	–	–	–	4.5	8
9103.210	B	150	142	138	132	126	64	56	52	33	32	–	14	35	28	10	9	–	–	–	4.5	7.8
9104.210	C	75	66	63	56	52	80	71	68	39	48	–	14	57	50	15	9.5	–	–	–	4.5	8
9105.210	C	125	116	113	106	99	80	71	68	39	48	–	14	57	50	15	10	1.5	6	42.5	4.5	8
9106.210	C	175	166	163	156	152	80	71	68	39	48	–	14	57	50	15	8	1.5	6	42.5	4.5	7
9107.210	C	250	241	238	231	226	80	71	68	39	48	–	14	57	50	15	9.5	1.5	6	42.5	4.5	7.5
9108.210	D	122	112	106	95	90	120	111	104	52	64	82	–	80	72	20	15.5	1.5	8	62.5	6.5	10.5
9110.210	D	220	211	204	195	183	120	111	104	50	64	82	–	91	82	30	15	1.5	9	71.5	6.7	11
9111.210	D	360	349	344	333	322	120	111	104	48	62	82	–	82	72	20	9	2	8.5	61.5	6.5	10.8
9112.210	D	160	151	140	132	120	160	151	140	76	89	110	–	91	82	20	20	2	8.5	71.5	7	12
9113.210	D	260	251	240	230	220	160	151	140	76	90	110	–	91	82	20	19	1.5	8.5	72	7	13
9114.210	D	360	350	340	330	316	160	151	140	76	89	110	–	91	82	20	19	2	9	71	7	13.5
9116.210	D	202	190	180	170	159	232	221	210	144	159	180	–	111	102	20	21	2	9	91	6	13
9117.210	D	280	271	260	250	239	232	221	210	144	159	180	–	111	102	20	21	2	9	91	6	13
9118.210	D	334	321	310	300	289	233	223	210	144	160	180	–	111	102	20	25	2	9	91	6.4	13.5
9119.210	D	330	321	310	300	290	230	221	210	144	160	180	–	181	170	20	9	2	9	159	7.5	11

Small enclosures

Terminal boxes KL

Spray-finished Catalogue 33, page 34

Stainless steel Catalogue 33, page 183

without gland plate

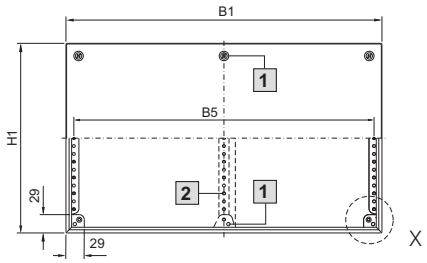

without gland plate

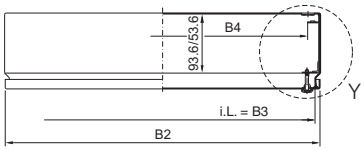

with gland plate

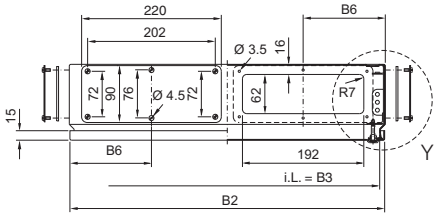

without gland plate

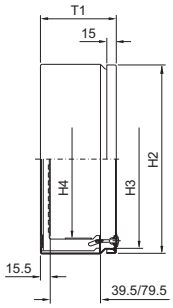

with gland plate

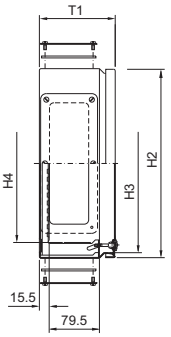

Detail X

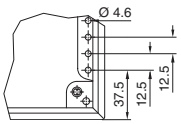

Detail Y
T1 = 80

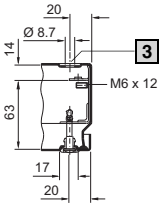

Detail Y
T1 = 120

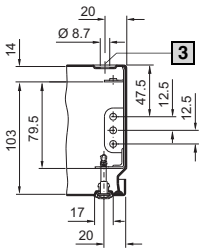

B1 = Overall width
B2 = Cover width
B3 = Clearance width of enclosure
B4 = Clearance frame/width between profile strips
B5 = Distance between axes of the mounting holes in the profile strips
B6 = Distance from outer edge of enclosure – centre of gland plate

H1 = Overall height
H2 = Cover height
H3 = Clearance height of enclosure
H4 = Clearance frame/height between profile strips

T1 = Overall depth

1 Only with W ≥ 600 mm
2 Only with W = 800 mm
3 Drilled hole does not apply to stainless steel version

Model No. KL			Width dimensions mm						Height dimensions mm				Depth dimensions mm
without gland plate	with gland plate	Stainless steel without gland plate	B1	B2	B3	B4	B5	B6	H1	H2	H3	H4	T1
1514.510	**–**	**1521.010**	150	148	132	109	125	–	150	148	132	–	80
1528.510	**–**	**–**	200	198	182	159	175	–	150	148	132	–	80
1516.510	**–**	**1523.010**	200	198	182	159	175	–	200	198	182	–	80
1515.510	**–**	**1522.010**	300	298	282	259	275	–	150	148	132	–	80
1517.510	**–**	**1524.010**	300	298	282	259	275	–	200	198	182	–	80
1518.510	**–**	**–**	400	398	382	359	375	–	200	198	182	–	80
1519.510	**–**	**–**	600	598	582	559	575	–	200	198	182	–	80
1500.510	**–**	**–**	150	148	132	109	125	–	150	148	132	100	120
1529.510	**–**	**–**	200	198	182	159	175	–	150	148	132	100	120
1502.510	**–**	**–**	200	198	182	159	175	–	200	198	182	150	120
1501.510	**1530.510**	**–**	300	298	282	259	275	150	150	148	132	100	120
1503.510	**1531.510**	**–**	300	298	282	259	275	150	200	198	182	150	120
1507.510	**1535.510**	**1526.010**	300	298	282	259	275	150	300	298	282	250	120
1589.510	**–**	**–**	400	398	382	359	375	–	150	148	132	100	120
1504.510	**1532.510**	**1525.010**	400	398	382	359	375	200	200	198	182	150	120
1508.510	**1536.510**	**–**	400	398	382	359	375	200	300	298	282	250	120
1511.510	**1539.510**	**–**	400	398	382	359	375	200	400	398	382	350	120
1505.510	**1533.510**	**–**	500	498	482	459	475	130	200	198	182	150	120
1509.510	**1537.510**	**–**	500	498	482	459	475	130	300	298	282	250	120
1506.510	**1534.510**	**–**	600	598	582	559	575	150	200	198	182	150	120
1510.510	**1538.510**	**–**	600	598	582	559	575	150	300	298	282	250	120
1512.510	**1540.510**	**–**	600	598	582	559	575	150	400	398	382	350	120
1527.510	**1542.510**	**–**	800	798	782	759	775	150	200	198	182	150	120
1513.510	**1541.510**	**–**	800	798	782	759	775	150	400	398	382	350	120

E-Box EB

Catalogue 33, page 37

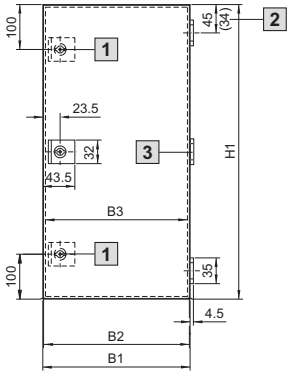

1 For EB 1557.500/ EB 1578.500/EB 1579.500 two locks

2 For EB 1551.500 and EB 1553.500

3 Only for EB 1579.500

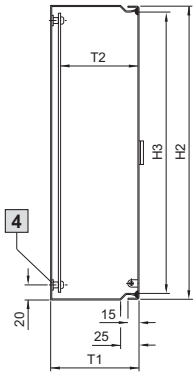

4 View A

Mounting plate

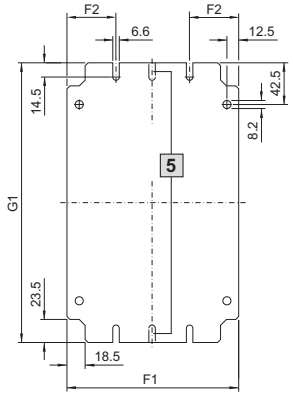

5 For 125 mm wide mounting plates, attachment is in the centre only

View A
for wall mounting

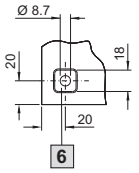

6 2 mm recessed

B1 = Overall width
B2 = Door width
B3 = Clearance width

H1 = Overall height
H2 = Door height
H3 = Clearance height

T1 = Overall depth
T2 = Clearance depth available for installation

F1 = Mounting plate width
F2 = Outer edge to centre mounting holes

G1 = Mounting plate height

Model No. EB	Width dimensions mm			Height dimensions mm			Depth dimensions mm		Mounting plate dimensions mm		
	B1	B2	B3	H1	H2	H3	T1	T2	F1	F2	G1
1551.500	150	148	132	150	148	132	80	65	125	62.5	135
1545.500	150	148	132	300	298	282	80	65	125	62.5	285
1546.500	200	198	182	200	198	182	80	65	175	50	185
1552.500	200	198	182	300	298	282	80	65	175	50	285
1547.500	200	198	182	400	398	382	80	65	175	50	385
1553.500	150	148	132	150	148	132	120	105	125	62.5	135
1548.500	150	148	132	300	298	282	120	105	125	62.5	285
1549.500	200	198	182	200	198	182	120	105	175	50	185
1554.500	200	198	182	300	298	282	120	105	175	50	285
1550.500	200	198	182	400	398	382	120	105	175	50	385
1555.500	300	298	282	300	298	282	120	105	275	50	285
1556.500	300	298	282	400	398	382	120	105	275	50	385
1557.500	200	198	182	500	498	482	120	105	175	50	485
1577.500	300	298	282	400	398	382	155	140	275	50	385
1578.500	300	298	282	600	598	582	155	140	275	50	585
1579.500	300	298	282	800	798	782	155	140	275	50	785

Small enclosures

Bus enclosures BG

Catalogue 33, page 39

BG 1583.520, BG 1584.520, BG 1585.520, BG 1586.520

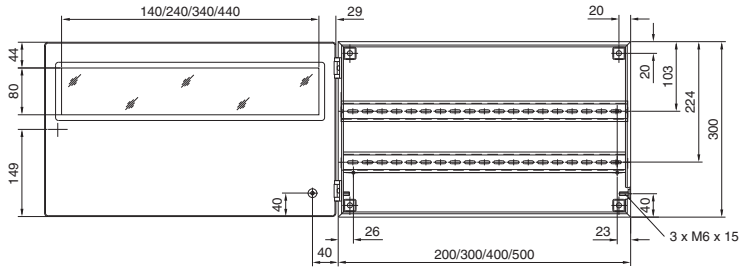

BG 1583.520

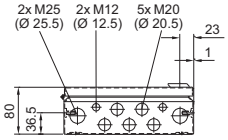

BG 1584.520

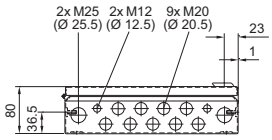

BG 1585.520

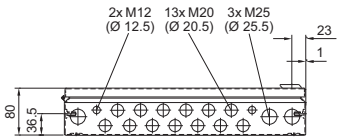

BG 1586.520

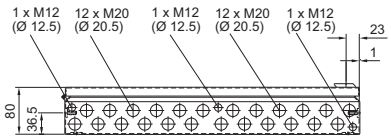

Catalogue 33, page 40

BG 1605.520, BG 1606.520

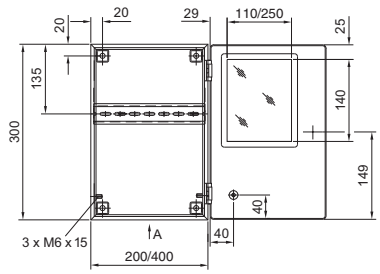

BG 1605.520

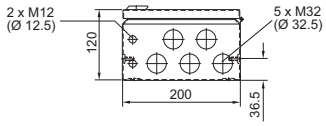

BG 1606.520

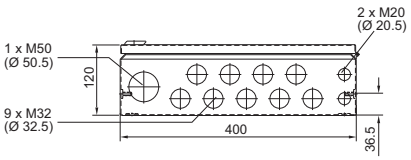

Catalogue 33, page 40

BG 1558.510, BG 1559.510

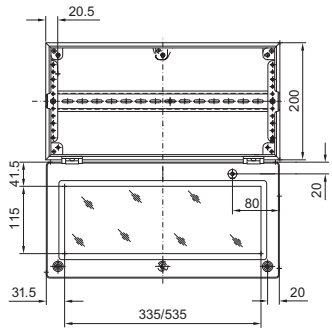

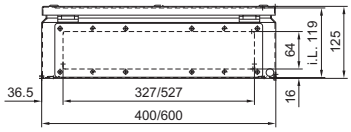

i.L. = Clearance width

Bus enclosures BG

Catalogue 33, page 40

Model No. BG	Dimensions mm					Heights of viewing windows mm		Gland plate opening clearance width x clearance width[1] mm
	W (B)	H	D (T)	F1	G1	H1	H2	
1577.500	400	300	155	385	275	–	–	–
1577.520						115	92	
1577.530						190	42	
1577.550						115	92	327 x 97
1577.560						190	42	
1577.450						155	92	–
1578.500	600	300	155	585	275	–	–	–
1578.520						115	92	
1578.530						190	42	
1578.550						115	92	527 x 97
1578.560						190	42	
1578.450						155	92	–
1579.500	800	300	155	785	275	–	–	–
1579.520						115	92	
1579.530						190	42	
1579.550						115	92	327 x 97 (2 x)
1579.560						190	42	
1579.450						155	92	–

[1] Gland plates 14 mm larger all-round.

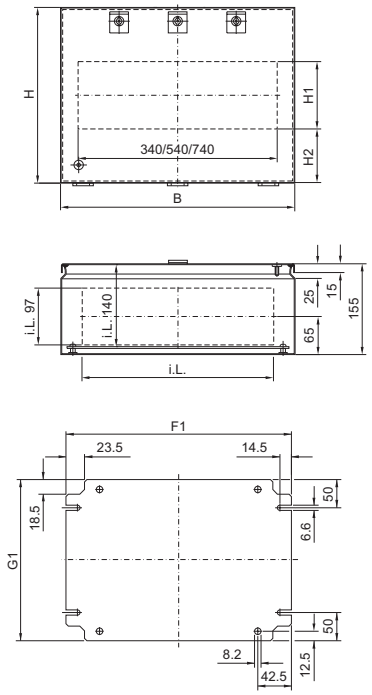

i.L. = Clearance width

Catalogue 33, page 41

BG 1611.510

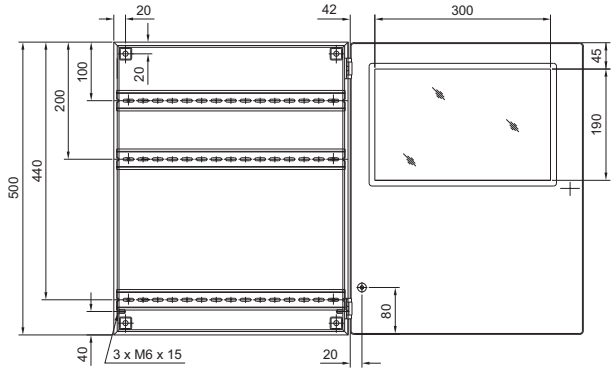

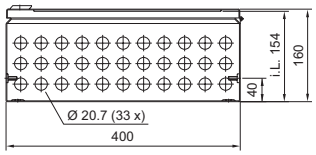

i.L. = Clearance width

Catalogue 33, page 41

BG 1609.510

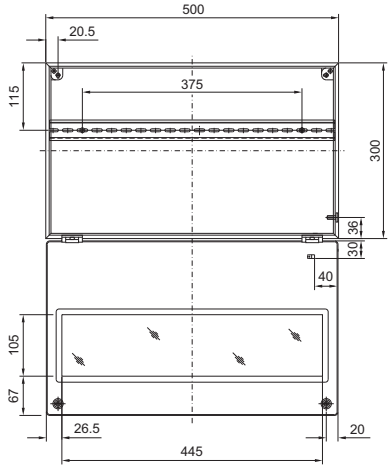

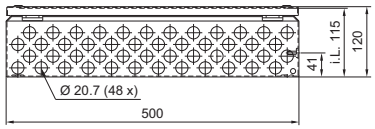

i.L. = Clearance width

Compact enclosures

Compact enclosures AE

Spray-finished Catalogue 33, page 44

AE 1032.500 (AE 1035.500)

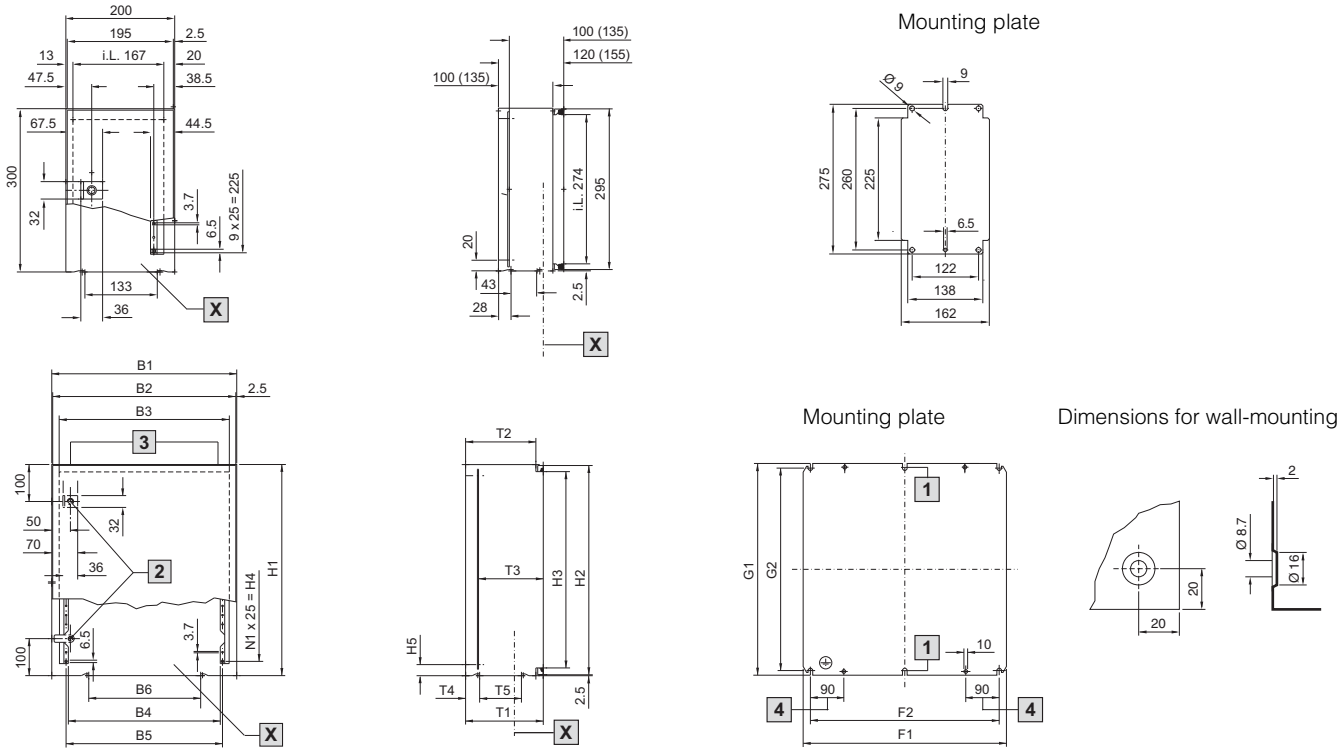

X Door interior view

i.L. = Clearance width

1 Only for AE 1180.500

2 From 500 mm high with 2 cam locks, less than 500 mm with 1 cam lock in the centre

3 AE 1073.500 and AE 1180.500 with holes for eyebolts, detail Y, see page 11 below

4 (50) for AE 1033.500, AE 1034.500 and AE 1036.500

Model No. AE	Width dimensions mm						Height dimensions mm						Depth dimensions mm					Mounting plates mm			
Spray-finished	B1	B2	B3	B4	B5	B6	H1	H2	H3	H4	H5	N1	T1	T2	T3	T4	T5	F1	F2	G1	G2
1036.500	300	295	260	211	223	233	300	295	260	225	27.5	9	155	132	113 – 129	47	45	254	215	275	250
1033.500	300	295	260	211	223	233	300	295	260	225	27.5	9	210	190	168 – 184	43	45	254	215	275	250
1034.500	300	295	260	211	223	233	400	395	360	325	27.5	13	210	190	168 – 184	43	45	254	215	375	350
1030.500	380	375	340	291	303	303	300	295	260	225	27.5	9	155	132	113 – 129	33	63	334	295	275	250
1031.500	380	375	340	291	303	303	300	295	260	225	27.5	9	210	190	168 – 184	33	63	334	295	275	250
1380.500	380	375	340	291	303	303	380	375	340	275	27.5	11	210	190	168 – 184	33	63	334	295	355	330
1039.500	600	595	560	511	523	500	380	375	340	275	27.5	11	210	190	168 – 184	38	113	549	510	355	330
1339.500	600	595	560	511	523	500	380	375	340	275	27.5	11	350	330	308 – 324	38	113	549	510	355	330
1038.500	380	375	340	291	303	303	600	595	560	525	30	21	210	190	168 – 184	33	63	334	295	570	545
1338.500	380	375	340	291	303	303	600	595	560	525	30	21	350	330	308 – 324	84	113	334	295	570	545
1045.500	400	395	360	311	323	303	500	495	460	425	30	17	210	190	168 – 184	38	113	354	315	475	450
1037.500	400	395	360	311	323	303	800	795	760	725	30	29	300	280	258 – 274	38	113	349	310	770	745
1050.500	500	495	460	411	423	303	500	495	460	425	30	17	210	190	168 – 184	38	113	449	410	470	445
1350.500	500	495	460	411	423	303	500	495	460	425	30	17	300	280	258 – 274	38	113	449	410	470	445
1057.500	500	495	460	411	423	303	700	695	660	625	30	25	250	230	208 – 224	38	113	449	410	670	645
1060.500	600	595	560	511	523	500	600	595	560	525	30	21	210	190	168 – 184	38	113	549	510	570	545
1054.500	600	595	560	511	523	500	600	595	560	525	30	21	250	230	208 – 224	38	113	549	510	570	545
1360.500	600	595	560	511	523	500	600	595	560	525	30	21	350	330	308 – 324	38	113	549	510	570	545
1076.500	600	595	560	511	523	500	760	755	720	675	30	27	210	190	168 – 184	38	113	549	510	730	705
1376.500	600	595	560	511	523	500	760	755	720	675	30	27	350	330	308 – 324	38	113	549	510	730	705
1058.500	600	595	560	511	523	500	800	795	760	725	30	29	250	230	208 – 224	38	113	549	510	770	745
1090.500	600	595	560	511	523	500	1000	995	960	925	35	37	250	230	208 – 224	38	113	539	500	955	930
1077.500	760	755	720	671	683	500	760	755	720	675	30	27	210	190	168 – 184	38	113	704	665	730	705
1073.500	760	755	720	671	683	500	760	755	720	675	30	27	300	280	258 – 274	38	113	704	665	730	705
1055.500	800	795	760	711	723	500	600	595	560	525	30	21	300	280	258 – 274	38	113	749	710	570	545
1180.500	800	795	760	711	723	500	1000	995	960	925	35	37	300	280	258 – 274	70	113	739	700	955	930

Compact enclosures AE

Spray-finished Catalogue 33, page 46

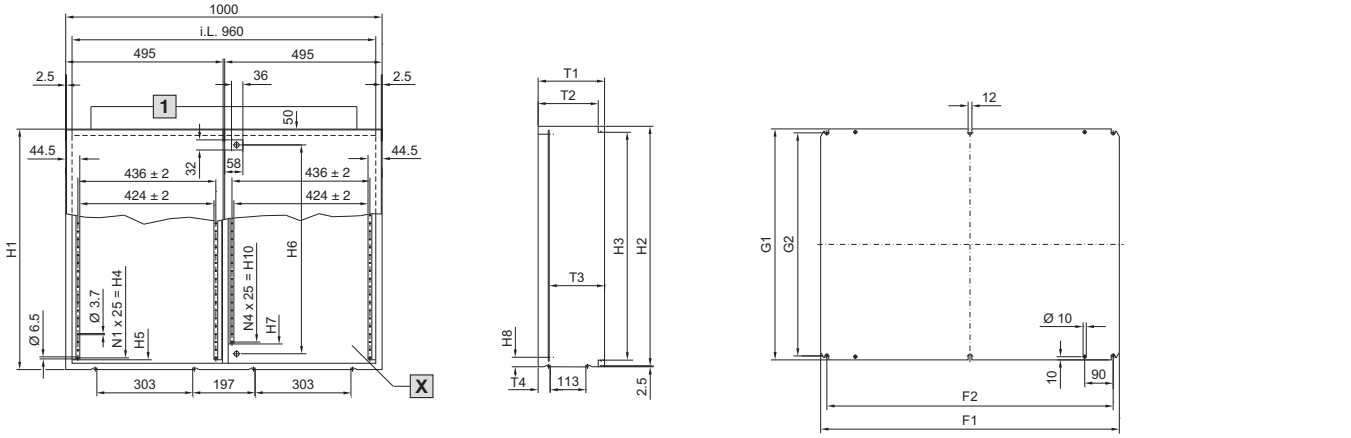

X Door interior view

1 AE 1110.500 and AE 1130.500 with holes for eyebolts, detail Y, see page 11 below

Detail wall-mounting holes, see page 10 at the top.

i.L. = Clearance width

Model No. AE Spray-finished	H1	H2	H3	H4	H5	H6	H7	H8	H10	N1	N4	T1	T2	T3	T4	F1	F2	G1	G2
1100.500	760	755	720	675	698	660	598	30	575	27	23	210	190	168 – 184	38	944	905	730	705
1130.500	760	755	720	675	698	660	598	30	575	27	23	300	280	258 – 274	70	944	905	730	705
1110.500	1000	995	960	925	938	900	838	35	825	37	33	300	280	258 – 274	70	939	900	955	930

Spray-finished Catalogue 33, page 46

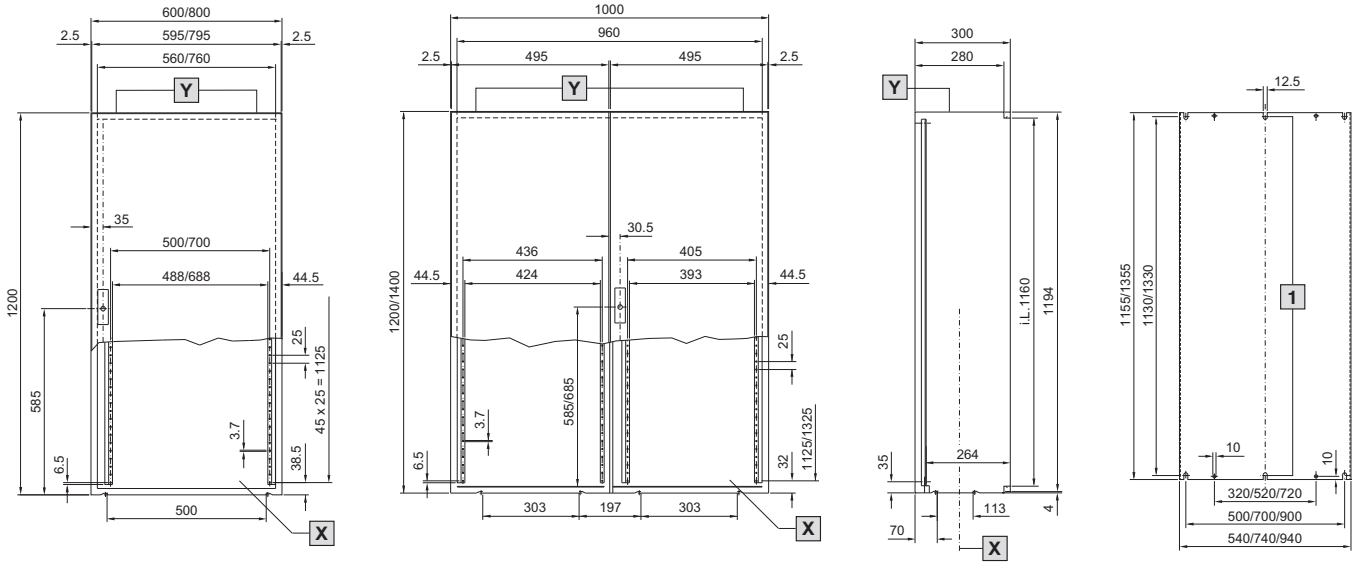

Detail Y

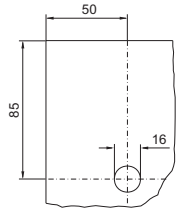

X Door interior view

Y Hole for eyebolts

Detail wall-mounting holes, see page 10 at the top.

1 Do not apply to AE 1260.500

i.L. = Clearance width

Model No. AE Spray-finished	W mm	H mm	D mm	Door(s)
1260.500	600	1200	300	1
1280.500	800	1200	300	1
1213.500	1000	1200	300	2
1114.500	1000	1400	300	2

Compact enclosures

Compact enclosures AE

ISV wall-mounted distributor Catalogue 33, page 47

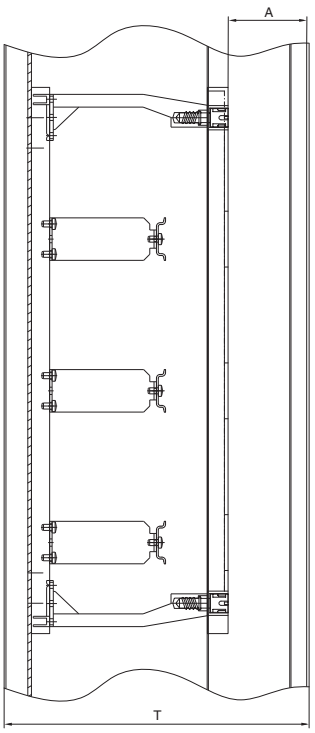

Model No. SV	T mm	A mm
9665.805 9665.825	210	24.5
9665.815 9665.835	250	64.5
9665.845 9665.855	300	115.5

T = Depth

Protection category IP 69K Catalogue 33, page 48

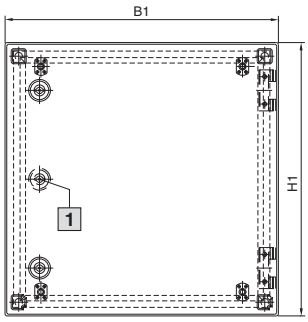

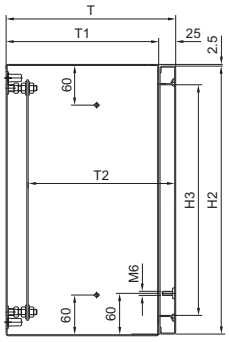

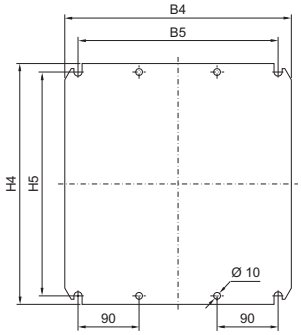

Mounting plate AE 1101.010

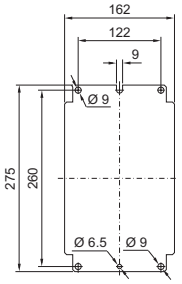

1 For AE 1101.010 and AE 1101.020 one cam lock

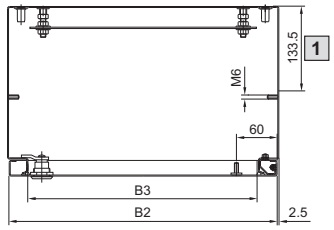

1 58.5 for AE 1101.010

Dimensions for wall-mounting

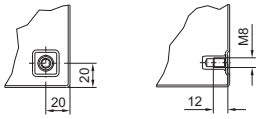

Model No. AE	1101.010	1101.020	1101.030	1101.040
Width (B1) mm	230	400	400	650
Height (H1) mm	330	400	650	650
Depth (T) mm	155	250	250	250
Door width (B2) mm	225	395	395	645
Door height (H2) mm	325	395	645	645
Clearance width (B3) mm	170	340	340	590
Clearance height (H3) mm	270	340	590	590
Enclosure depth (T1) mm	130	225	225	225
Installation depth (T2) mm	135	208 – 224	208 – 224	208 – 224
Mounting plate width (B4) mm	–	334	334	549
Centre-to-centre spacing of the attachment holes (B5) mm	–	295	295	510
Mounting plate height (H4) mm	–	355	570	570
Centre-to-centre spacing of the attachment holes (H5) mm	–	330	545	545
Mounting plate thickness mm	2	2	2.5	2.5

Compact system enclosures Rittal CM

Catalogue 33, page 50

CM 5110.500 – 5117.500 CM 5118.500 – 5123.500

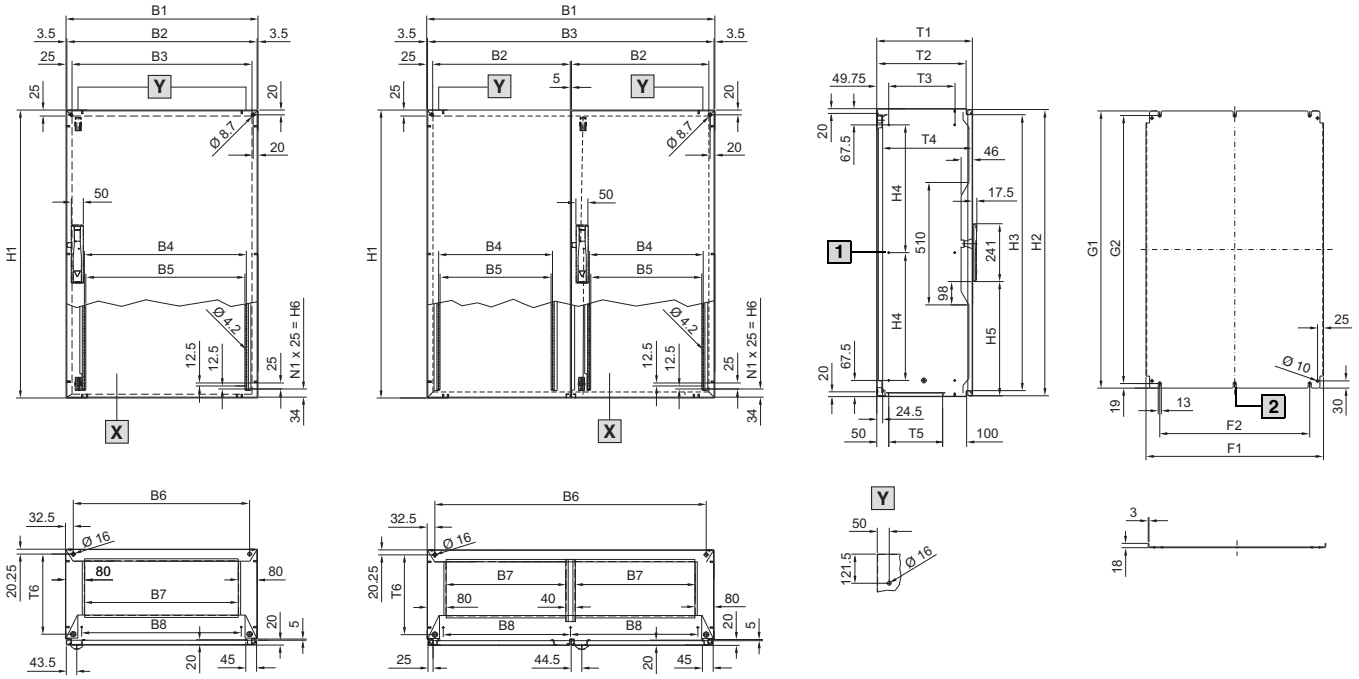

Dimensions for floor-mounting: B6, T6

Dimensions for wall-mounting

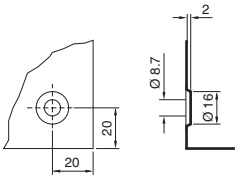

X Door interior view

Y Hole for eyebolts

1 Does not apply to H = 800

2 Only for enclosure width from 1000 mm

Model No. CM		Enclosure width mm								Enclosure height mm							Enclosure depth mm						Mounting plate			
																							Width mm		Height mm	
		B1	B2	B3	B4	B5	B6	B7	B8	H1	H2	H3	H4	H5	H6	N1	T1	T2	T3	T4	T5	T6	F1	F2	G1	G2
5110.500	single-door	600	593	550	475	463	535	440	465	800	793	750	665	276	725	29	400	374.5	275	373	224.5	334	540	425	755	717
5111.500		600	593	550	475	463	535	440	465	1000	993	950	432.5	376	925	37	400	374.5	275	373	224.5	334	540	425	955	917
5112.500		600	593	550	475	463	535	440	465	1200	1193	1150	532.5	476	1125	45	300	274.5	175	273	124.5	234	540	425	1155	1117
5113.500		600	593	550	475	463	535	440	465	1200	1193	1150	532.5	476	1125	45	400	374.5	275	373	224.5	334	540	425	1155	1117
5114.500		800	793	750	675	663	735	640	665	1000	993	950	432.5	376	925	37	300	274.5	175	273	124.5	234	740	625	955	917
5115.500		800	793	750	675	663	735	640	665	1000	993	950	432.5	376	925	37	400	374.5	275	373	224.5	334	740	625	955	917
5116.500		800	793	750	675	663	735	640	665	1200	1193	1150	532.5	476	1125	45	300	274.5	175	273	124.5	234	740	625	1155	1117
5117.500		800	793	750	675	663	735	640	665	1200	1193	1150	532.5	476	1125	45	400	374.5	275	373	224.5	334	740	625	1155	1117
5118.500	double-door	1000	494	950	375	363	935	400	432.5	1000	993	950	432.5	376	925	37	300	274.5	175	273	124.5	234	940	825	955	917
5119.500		1000	494	950	375	363	935	400	432.5	1200	1193	1150	532.5	476	1125	45	300	274.5	175	273	124.5	234	940	825	1155	1117
5120.500		1000	494	950	375	363	935	400	432.5	1200	1193	1150	532.5	476	1125	45	400	374.5	275	373	224.5	334	940	825	1155	1117
5121.500		1000	494	950	375	363	935	400	432.5	1400	1393	1350	632.5	576	1325	53	300	274.5	175	273	124.5	234	940	825	1355	1317
5122.500		1000	494	950	375	363	935	400	432.5	1400	1393	1350	632.5	576	1325	53	400	374.5	275	373	224.5	334	940	825	1355	1317
5123.500		1200	594	1150	475	463	1135	500	532.5	1200	1193	1150	532.5	476	1125	45	400	374.5	275	373	224.5	334	1140	1025	1155	1117

Compact enclosures

Plastic enclosures KS

Catalogue 33, page 52

KS 1423.500, KS 1432.500
with only one cam lock in the centre

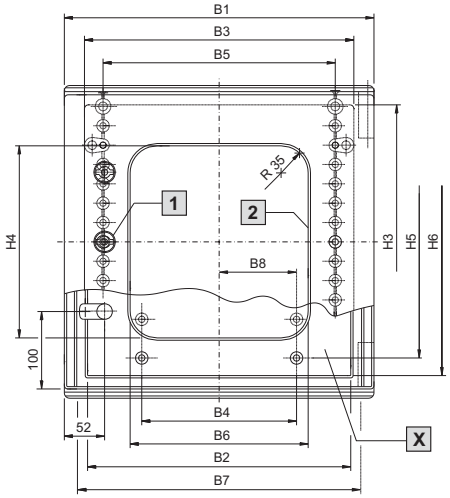

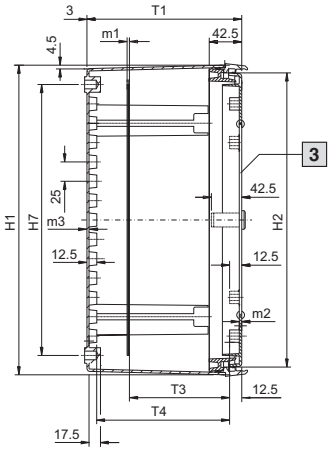

Mounting plate

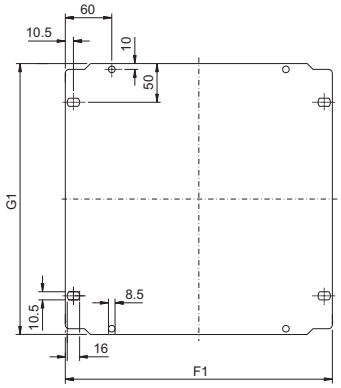

B7 = Separation width for wall mounting hole

H7 = Separation height for wall mounting hole

1 Only for KS 1423.500, KS 1432.500

2 Viewing window only with KS 1448.500, KS 1449.500, KS 1454.500, KS 1467.500

3 Material thickness of viewing window: 3 mm

X Door interior view

Model No. KS	Width dimensions mm								Height dimensions mm							Depth dimensions mm			Material thickness mm			Mounting plate mm	
	B1	B2	B3	B4	B5	B6[1)]	B7	B8	H1	H2	H3	H4[1)]	H5	H6	H7	T1	T3	T4	m1	m2	m3	F1	G1
1423.500	200	140	150	–	100	–	150	25	300	280	256	–	200	245	250	150	80 – 110/117	119	2.0	3.0	3.0	145	250
1432.500	250	190	200	75	150	–	200	50	350	330	306	–	250	295	300	150	80 – 110/117	119	2.0	3.0	3.0	195	300
1434.500	300	240	249	100	200	–	250	50	400	380	355	–	300	345	350	200	80 – 160/167	169	2.0	3.0	3.0	245	350
1444.500/ 1448.500	400	340	348	200	300	230	350	100	400	380	354	250	300	345	350	200	80 – 159/166	168.5	2.5	3.2	3.2	345	350
1446.500/ 1449.500	400	340	348	200	300	230	350	100	600	580	554	450	500	545	550	200	80 – 158/165	168	2.5	3.5	3.5	345	550
1466.500/ 1467.500	600	540	548	400	500	430	550	200	600	580	554	450	500	545	550	200	80 – 158/165	168	2.5	3.5	3.5	545	550
1453.500/ 1454.500	500	440	434	300	400	330	450	150	500	480	454	350	400	445	450	300	80 – 258/265	268	2.5	3.5	3.5	417	450

[1)] Only in enclosures with viewing window.

Plastic enclosures KS

Catalogue 33, page 53

KS 1469.500/KS 1479.500
KS 1468.500/KS 1480.500 without viewing window

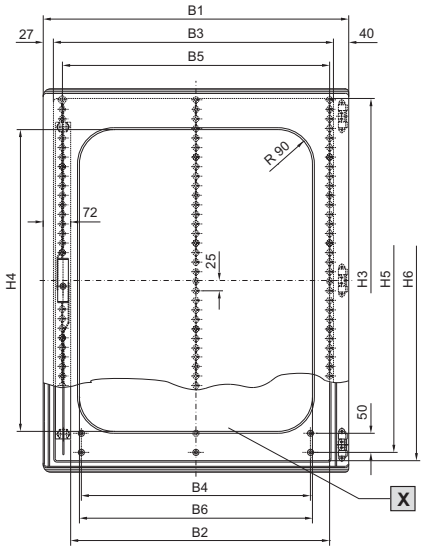

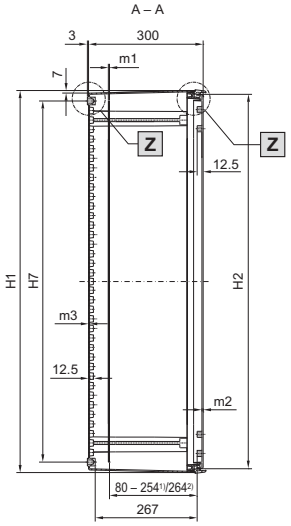

Mounting plate

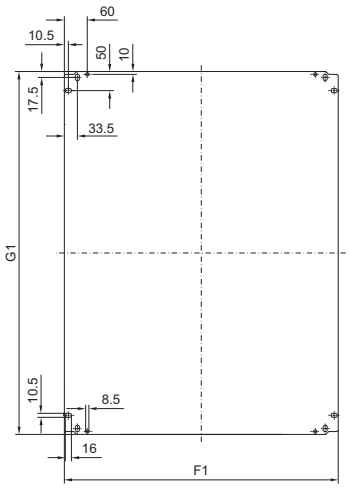

KS 1400.500

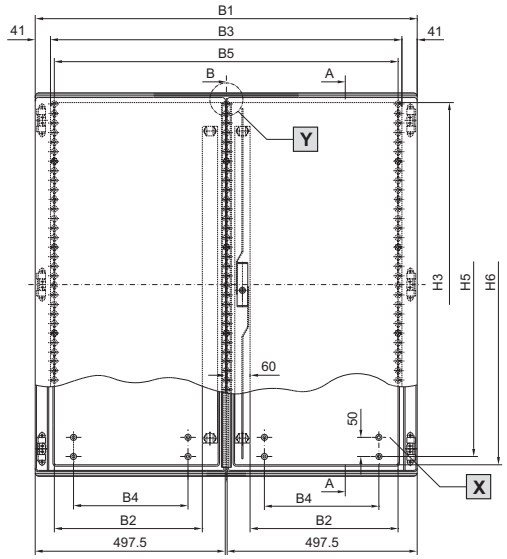

1) Infinite with mounting plate depth adjustment KS 1491.000

2) When mounting on studs directly on the threaded insert

B7 = Separation width Wall mounting hole

H7 = Separation height Wall mounting hole

X Door interior view

Y Screw-fastened centre bar for KS 1400.500

Z Distance from mounting insert to centre bar

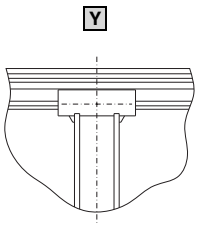

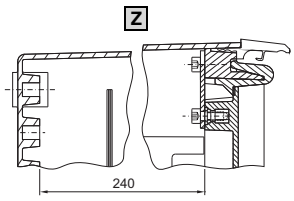

Model No. KS	Width dimensions mm							Height dimensions mm							Material thickness mm			Mounting plate mm	
	B1	B2	B3	B4	B5	B6[1]	B7	H1	H2	H3	H4[1]	H5	H6	H7	m1	m2	m3	G1	F1
1468.500/1469.500	600	485	533	400	500	410	550	800	780	753	590	700	740	750	3	3.7	3.7	750	517
1479.500/1480.500	800	685	733	600	700	610	750	1000	980	953	790	900	940	950	3	3.7	4.0	950	717
1400.500	1000	387	918	300	900	–	950	1000	980	952	–	900	940	950	3	3.5	4.0	950	917

[1] Only in enclosures with viewing window.

Wall-mounted network enclosures

VerticalBox

Catalogue 33, page 56

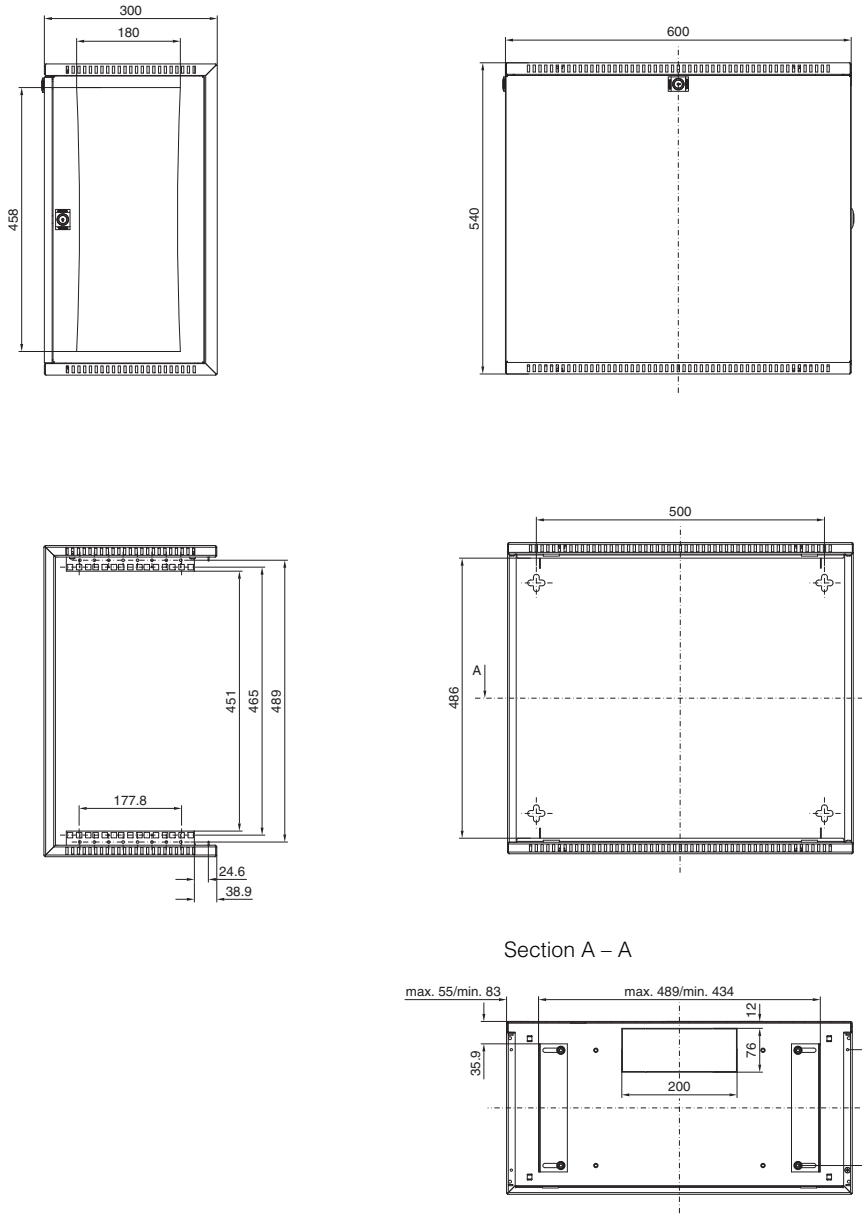

Model No. DK	U	Width mm	Height mm	Depth mm
7501.000	5	300	540	600

FlatBox

With 482.6 mm (19˝) mounting angles Catalogue 33, page 57

With 482.6 mm (19˝) mounting frame Catalogue 33, page 58

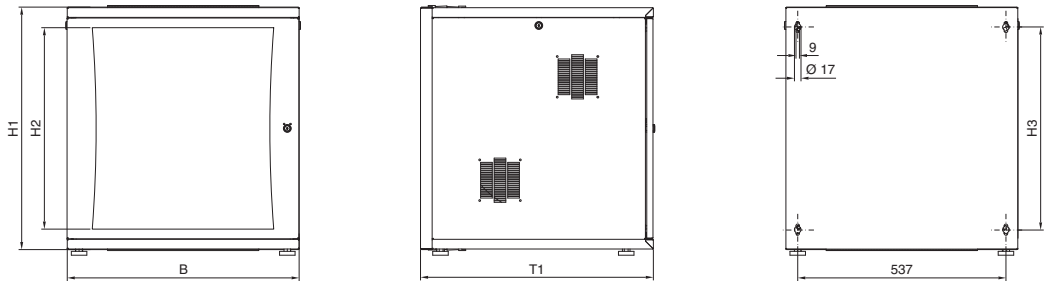

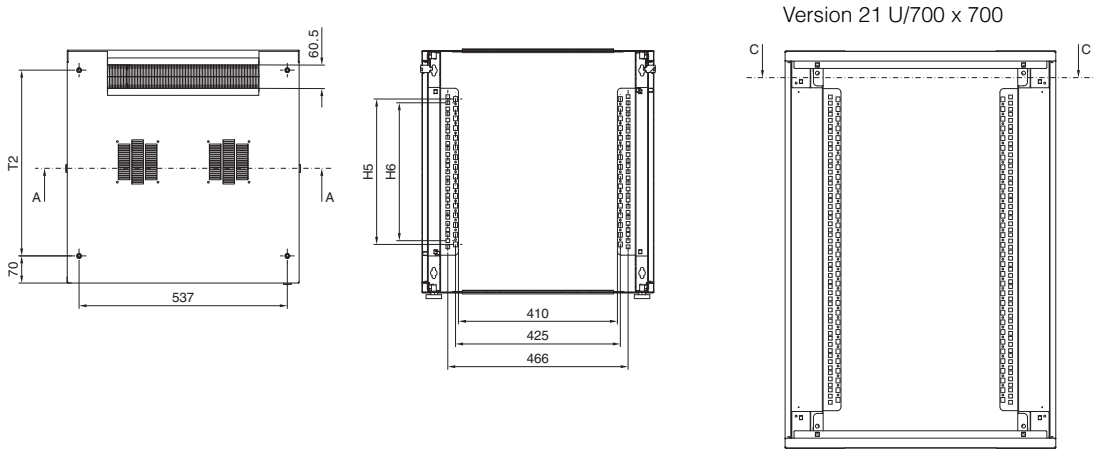

Section A – A

Section B – B

Section C – C

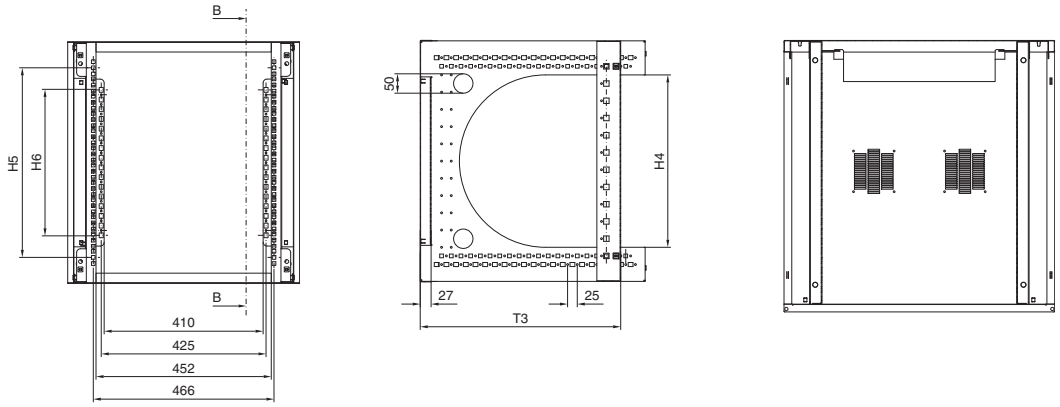

Model No. DK	U	Width dimensions mm	Height dimensions mm							Depth dimensions mm		
		B	H1	H2	H3	H4	H5	H6	H7	T1	T2	T3
7507.000	6	600	365.1	252.7	255.6	177.8	266.7	125	88.9	400	279	342
7507.100	6	600	365.1	252.7	255.6	177.8	266.7	125	88.9	600	279	542
7507.010	9	600	498.5	386.1	389	311.2	400.1	250	222.3	400	379	342
7507.110	9	600	498.5	386.1	389	311.2	400.1	250	222.3	600	379	542
7507.020	12	600	631.8	519.4	522.3	444.5	533.4	375	355.6	400	479	342
7507.120	12	600	631.8	519.4	522.3	444.5	489	375	355.6	600	479	542
7507.030	15	600	765.2	652.8	655.7	577.9	666.8	525	489	400	579	342
7507.200	15	700	765.2	652.8	655.7	577.9	666.8	525	489	700	579	642
7507.210	18	700	898.5	736.1	789	711.2	800.1	650	622.3	700	579	642
7507.220	21	700	1031.9	869.5	922.4	844.6	933.5	775	755.7	700	579	642

Wall-mounted network enclosures

QuickBox

With glazed door Catalogue 33, page 59, 60

With sheet steel door Catalogue 33, page 60

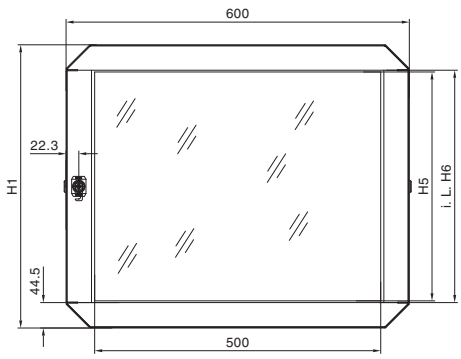

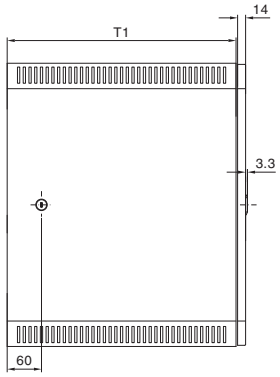

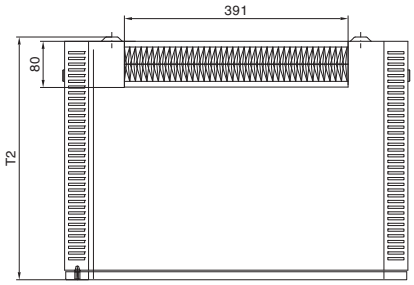

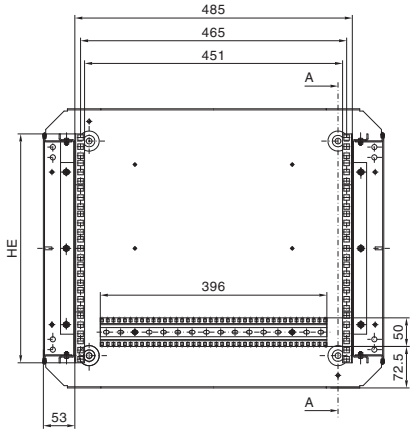

i.L. = Clearance width

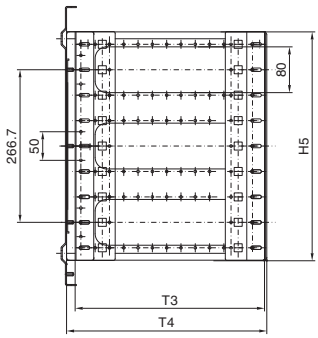

Rear view

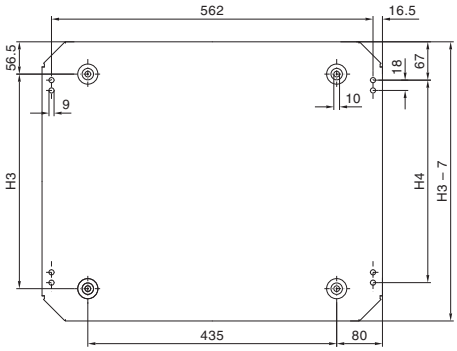

Section A – A

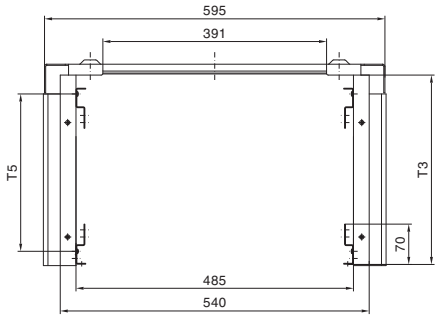

Model No. DK		U (HE)	Height dimensions mm						Depth dimensions mm				
Glazed door	Sheet steel door		H1	H2	H3	H4	H5	H6	T1	T2	T3	T4	T5
7502.013	**–**	6	362	361.6	241.6	220.5	266.7	272.7	300	324	230	250	–
7502.014	**7502.114**	6	362	361.6	241.6	220.5	266.7	272.7	400	424	330	350	275
7502.016	**–**	6	362	361.6	241.6	220.5	266.7	272.7	600	624	530	550	475
7502.024	**7502.124**	9	495	495	375	353.9	400	406	400	424	330	350	275
7502.026	**7502.126**	9	495	495	375	353.9	400	406	600	624	530	550	475
7502.034	**–**	12	628	628.3	508.3	487.2	533.4	539.4	400	424	330	350	275
7502.035	**–**	12	628	628.3	508.3	487.2	533.4	539.4	500	524	430	450	375
7502.036	**7502.136**	12	628	628.3	508.3	487.2	533.4	539.4	600	624	530	550	475
7502.436	**–**	12	628	628.3	508.3	487.2	533.4	539.4	600	624	530	550	475
7502.044	**7502.144**	15	762	761.7	641.7	620.6	666.7	672.7	400	424	330	350	275
7502.045	**–**	15	762	761.7	641.7	620.6	666.7	672.7	500	524	430	450	375
7502.046	**7502.146**	15	762	761.7	641.7	620.6	666.7	672.7	600	624	530	550	475
7502.446	**–**	15	762	761.7	641.7	620.6	666.7	672.7	600	624	530	550	475
7502.054	**–**	18	895	895	775	753.9	800	806	400	424	330	350	275
7502.056	**–**	18	895	895	775	753.9	800	806	600	624	530	550	475
7502.064	**–**	21	1028	1028.4	908.4	887.3	933.4	939.4	400	424	330	350	275
7502.066	**7502.166**	21	1028	1028.4	908.4	887.3	933.4	939.4	600	624	530	550	475

QuickBox

With vertical 482.6 mm (19˝) level Catalogue 33, page 61

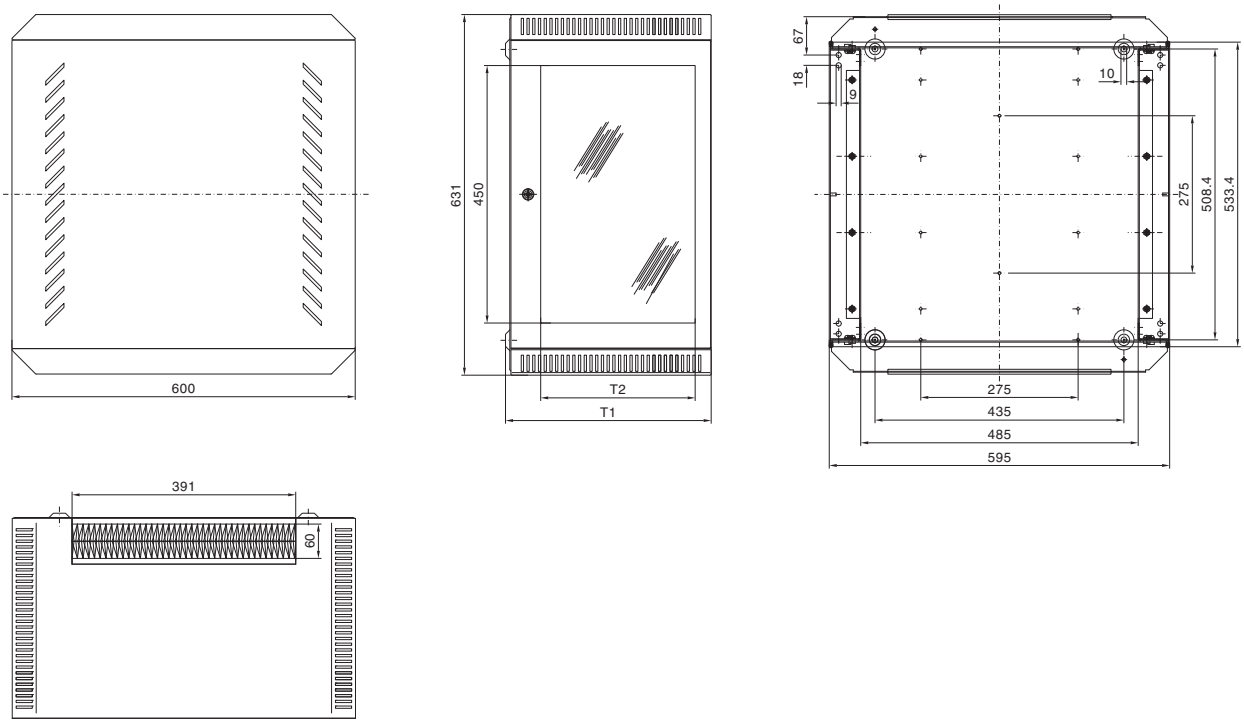

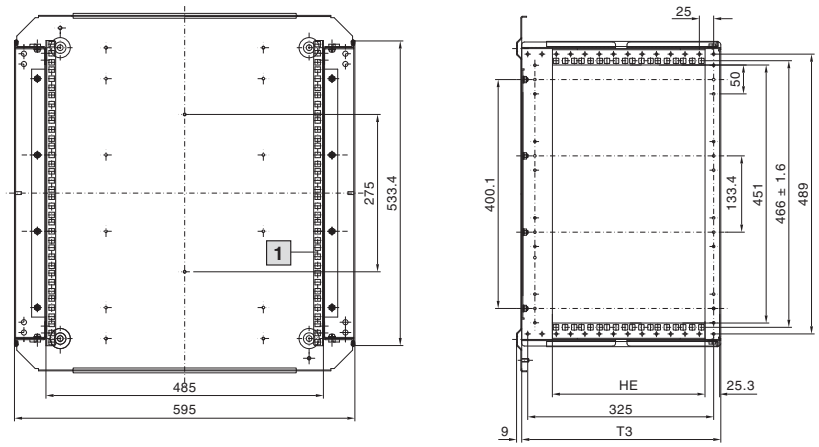

1 Optional:
482.6 mm (19˝) mounting angles, max. 12 U

Model No. DK	U (HE)	Depth dimensions mm		
		T1	T2	T3
7502.630	3	210	134	198
7502.660	6	360	270	348

Wall-mounted network enclosures

Wall-mounted enclosure EL, 3-part

Depth 573/673 mm, pre-configured Catalogue 33, page 62

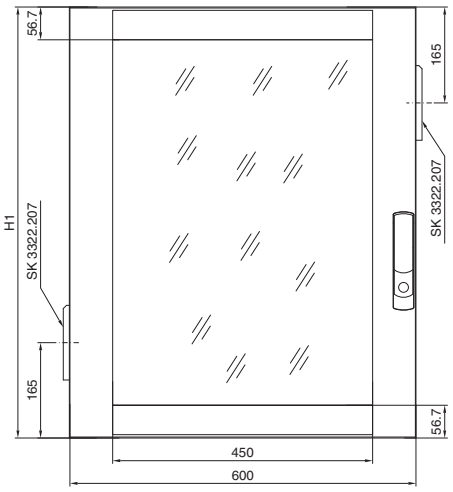

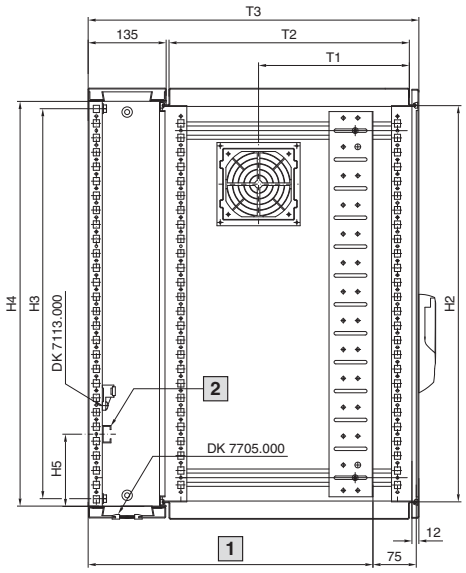

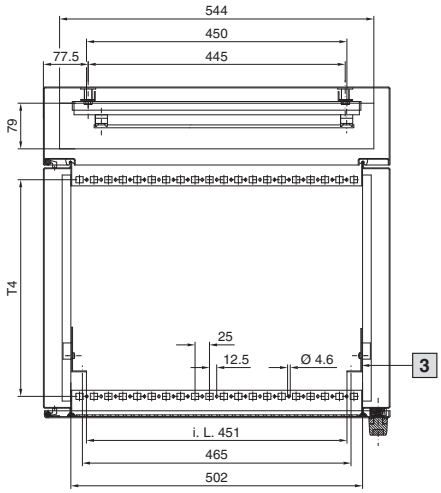

1 Installation depth T5

2 C rail

3 482.6 mm (19˝) mounting angle, fully depth-adjustable

i.L. = Clearance width

Model No. DK	Enclosure depth mm	U	Height dimensions mm					Depth dimensions mm				
			H1	H2	H3	H4	H5	T1	T2	T3	T4	T5
7709.735	573	9	478	415	407	432	103.5	261	416	572.5	375	491.5 – max. 520
7715.735		15	746	684	674	699	124.5	261	416	572.5	375	491.5 – max. 520
7721.735		21	1012	949	941	965	133	261	416	572.5	375	491.5 – max. 520
7709.535	673	9	478	415	407	432	103.5	361	516	672.5	475	491.5 – max. 520
7715.535		15	746	684	674	699	124.5	361	516	672.5	475	491.5 – max. 520
7721.535		21	1012	949	941	965	133	361	516	672.5	475	491.5 – max. 520

Wall-mounted enclosure EL, 3-part

Depth 473 mm, with punched rails Catalogue 33, page 63

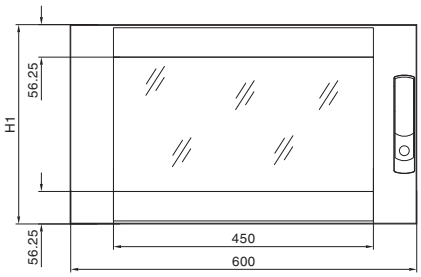

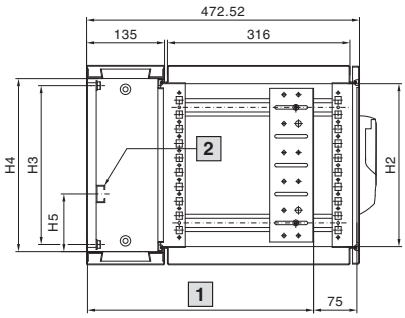

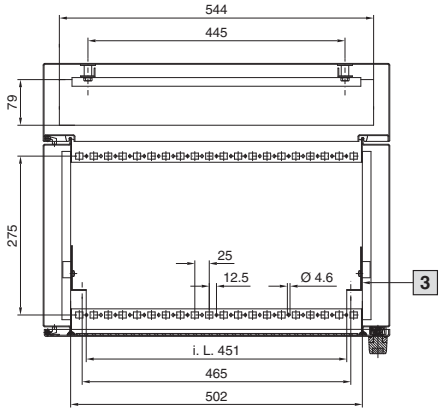

1 Installation depth D

2 C rail

3 482.6 mm (19˝) mounting angle, fully depth-adjustable

i.L. = Clearance width

Model No. DK	U	Height dimensions mm					Depth dimensions mm
		H1	H2	H3	H4	H5	D
7706.135	6	345	284	274	299	99.5	391 – max. 420
7709.135	9	478	417	407	432	103.5	391 – max. 420
7712.135	12	612	551	540	565	120	391 – max. 420
7715.135	15	746	684	674	699	124.5	391 – max. 420
7718.135	18	878	817	807	832	128.5	391 – max. 420
7721.135	21	1012	951	941	965	133	391 – max. 420

Wall-mounted network enclosures

Wall-mounted enclosure EL, 3-part

Depth 373/473 mm, with mounting plate Catalogue 33, page 64, 65

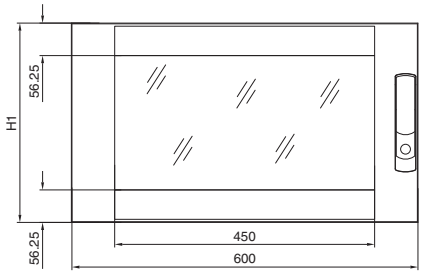

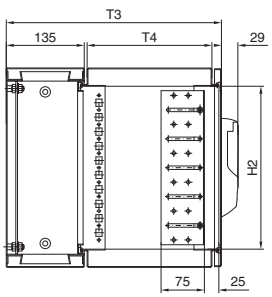

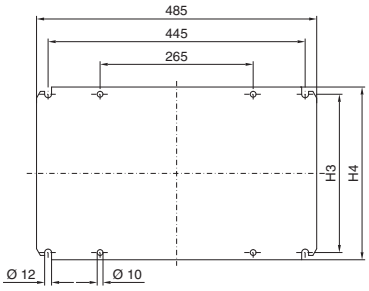

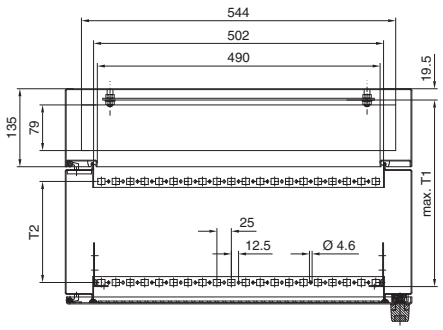

Model No. DK	Enclosure depth mm	U	Height dimensions mm				Depth dimensions mm			
			H1	H2	H3	H4	T1	T2	T3	T4
2243.605	373	3	212	151	141	165	320	175	372.5	216
2246.605		6	345	284	274	299	320	175	372.5	216
2249.605		9	478	417	407	432	320	175	372.5	216
2252.605		12	612	551	541	565	320	175	372.5	216
2255.605		15	746	684	674	699	320	175	372.5	216
2258.605		18	878	817	807	832	320	175	372.5	216
2261.605		21	1012	951	941	965	320	175	372.5	216
2253.605	473	3	212	151	141	165	420	275	472.5	316
2256.605		6	345	284	274	299	420	275	472.5	316
2259.605		9	478	417	407	432	420	275	472.5	316
2262.605		12	612	551	541	565	420	275	472.5	316
2265.605		15	746	684	674	699	420	275	472.5	316
2268.605		18	878	817	807	832	420	275	472.5	316
2271.605		21	1012	951	941	965	420	275	472.5	316

Wall-mounted enclosure EL, 2-part

Depth 369 mm, with swing frame Catalogue 33, page 66

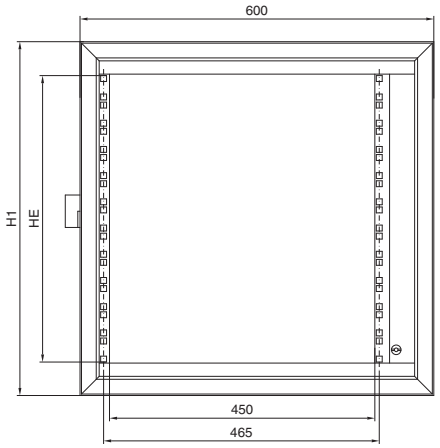

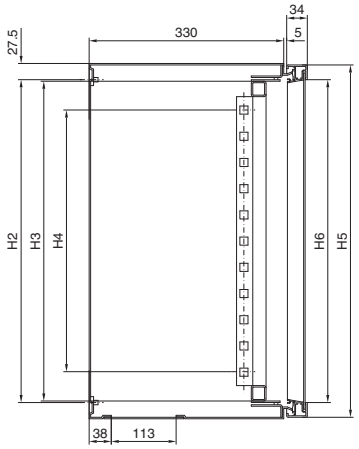

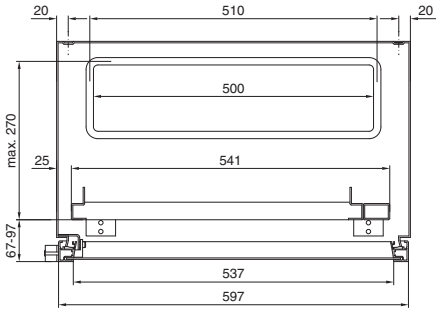

Model No. DK	U (HE)	Height dimensions mm					
		H1	H2	H3	H4	H5	H6
1919.500	6	380	330	320	222	377	317
1920.500	11	600	545	542	445	597	537
1926.500	14	760	705	676	578	757	697

Wall-mounted network enclosures

Wall-mounted enclosures AE

With 482.6 mm (19˝) mounting angles Catalogue 33, page 67

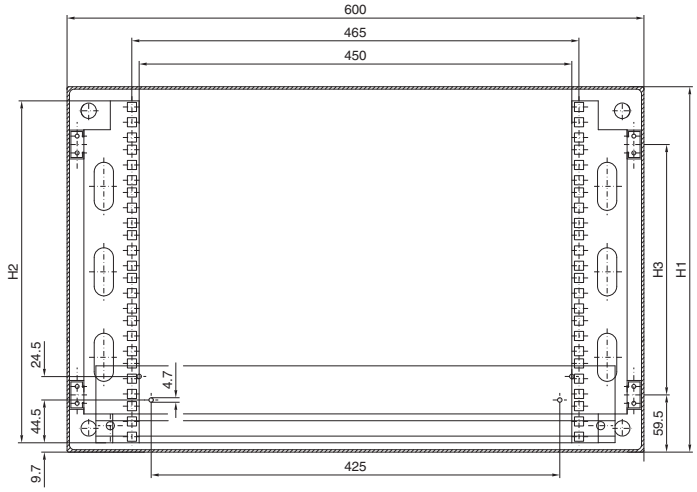

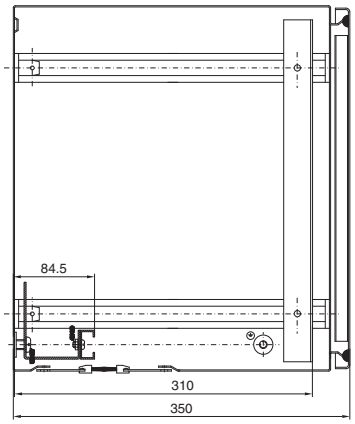

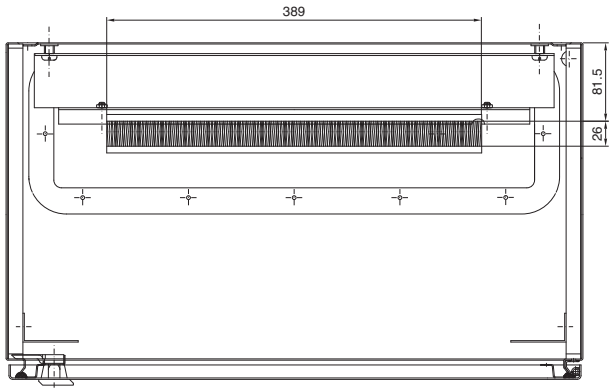

Model No. DK	U	Height dimensions mm		
		H1	H2	H3
7641.000	8	380	355	261
7643.000	13	600	578	481
7645.000	16	760	711	641

Wall-mounted enclosures AE

With 482.6 mm (19˝) pull-out frame Catalogue 33, page 68

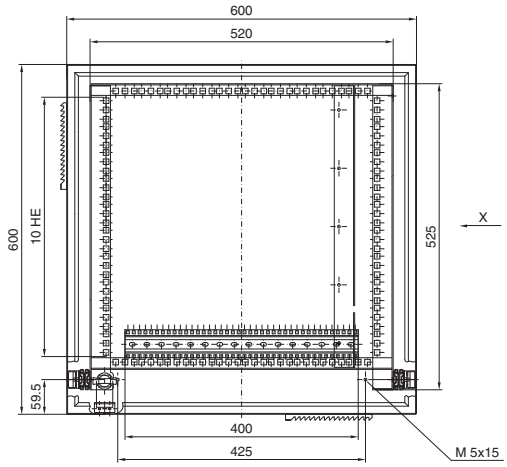

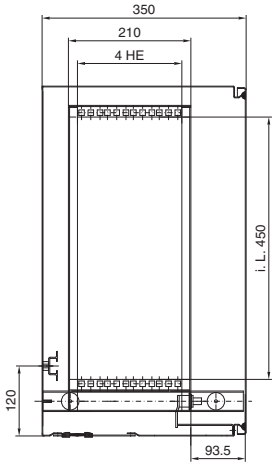

Detail X rotated through 90°

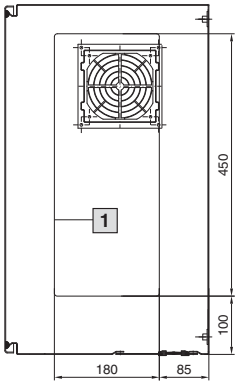

1 Cut-out for toughened safety glass window

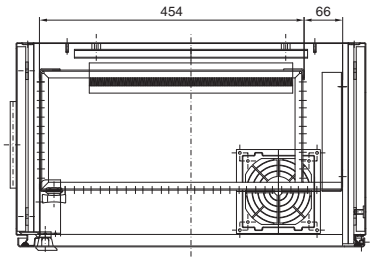

Model No. DK	U (HE)		Width mm	Height mm	Depth mm
	vertical	horizontal			
7644.000	4	10	600	600	350

Small fibre-optic distributors

Catalogue 33, page 69

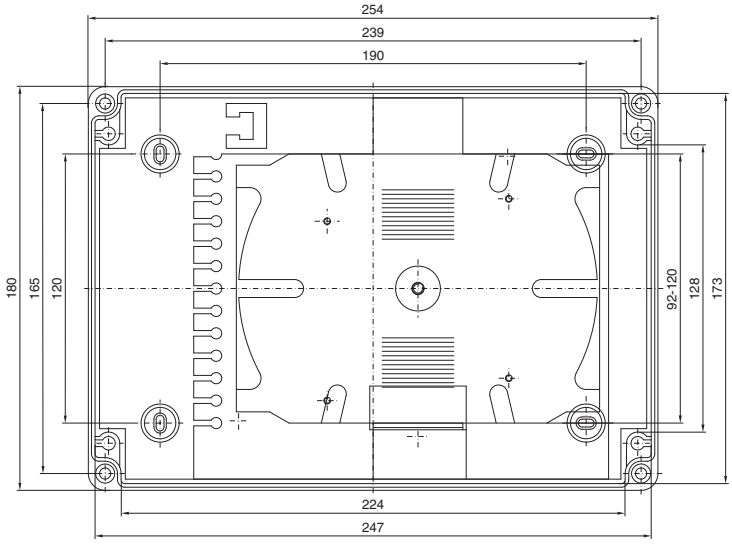

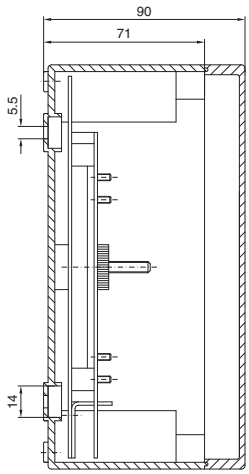

Model No. DK	Fibres	Width mm	Height mm	Depth mm
7451.000	1 – 24	180	254	90

Enclosure systems

Baying systems TS 8

Spray-finished Catalogue 33, page 72 – 77

Stainless steel Catalogue 33, page 194

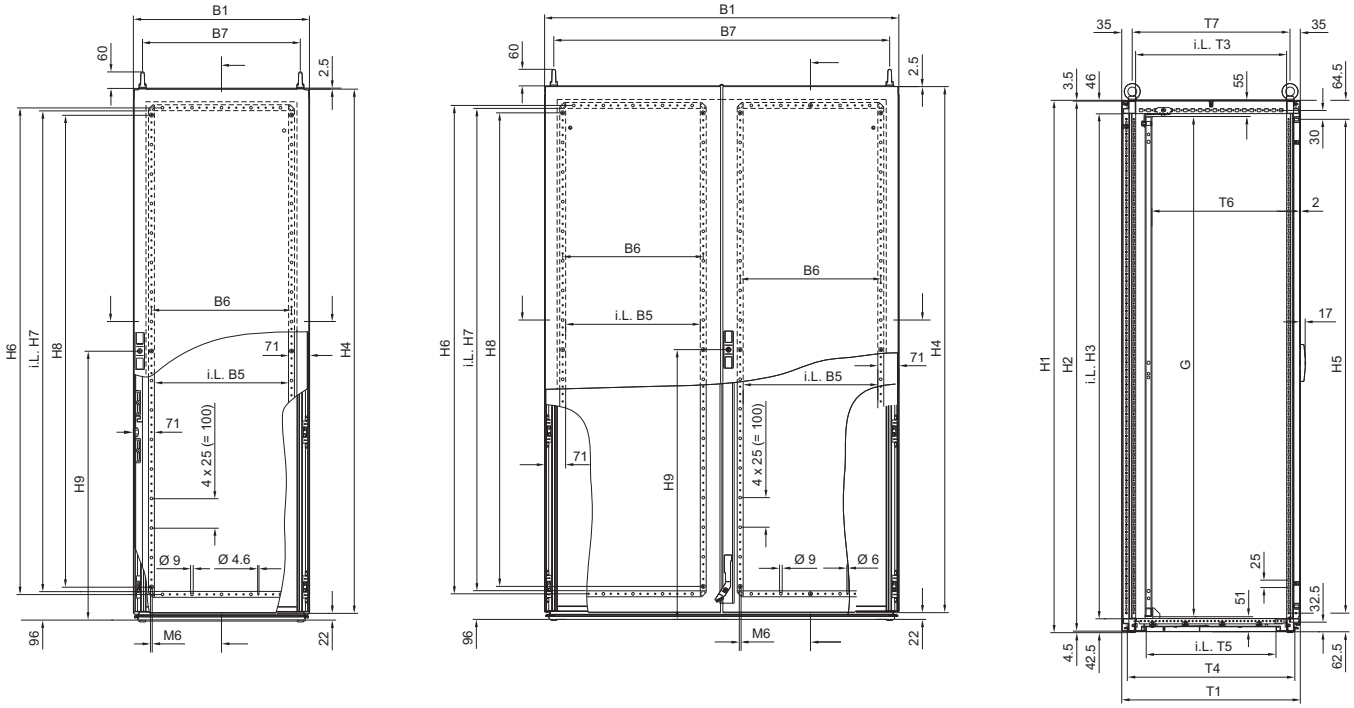

i.L. = Clearance width

Note:
With fitted side panels, the overall width (B1) is increased by 9 mm. Between bayed enclosures, allow 3 mm for the seal.

1 Does not apply to TS 8880.500/TS 8881.500

2 Divided base opening also with TS 8084.500 (single-door)

3 In the vicinity of the adjacent door lock T6 is reduced by 45 mm

Double-door

Model No. TS		Width dimensions mm								Height dimensions mm									Depth dimensions mm							Mounting plates mm	
Spray-finished	Stainless steel	B1	B2	B3	B4	B5	B6	B7	B8	H1	H2	H3	H4	H5	H6	H7	H8	H9	T1	T2	T3	T4	T5	T6	T7	F	G
8215.500	–	1197	1192	1112	1075	455	475	1135	500	1205	1197	1112	1177.5	1075	1050	1030	1000	611	505	375	412	468	340	130 – 455	435	1099	1096
8245.500	–	1197	1192	1112	1075	455	475	1135	500	1405	1397	1312	1377.5	1275	1250	1230	1200	711	505	375	412	468	340	130 – 455	435	1099	1296
8080.500	–	997	992	912	875	355	375	935	400	1805	1797	1712	1777.5	1675	1650	1630	1600	911	405	275	312	368	240	130 – 355	335	899	1696
8284.500	**8456.X00**	1197	1192	1112	1075	455	475	1135	500	1805	1797	1712	1777.5	1675	1650	1630	1600	911	405	275	312	368	240	130 – 355	335	1099	1696
8880.500	–	797	792	712	675	255	275	735	640	1805	1797	1712	1777.5	1675	1650	1630	1600	911	505	375	412	468	340	130 – 455	435	699	1696
8285.500	**8453.X00**	1197	1192	1112	1075	455	475	1135	500	1805	1797	1712	1777.5	1675	1650	1630	1600	911	505	375	412	468	340	130 – 455	435	1099	1696
8881.500	–	797	792	712	675	255	275	735	640	1805	1797	1712	1777.5	1675	1650	1630	1600	911	605	475	512	568	440	130 – 555	535	699	1696
8286.500	–	1197	1192	1112	1075	455	475	1135	500	1805	1797	1712	1777.5	1675	1650	1630	1600	911	605	475	512	568	440	130 – 555	535	1099	1696
8004.500	–	997	992	912	875	355	375	935	400	2005	1997	1912	1977.5	1875	1850	1830	1800	1011	405	275	312	368	240	130 – 355	335	899	1896
8204.500	–	1197	1192	1112	1075	455	475	1135	500	2005	1997	1912	1977.5	1875	1850	1830	1800	1011	405	275	312	368	240	130 – 355	335	1099	1896
8005.500	–	997	992	912	875	355	375	935	400	2005	1997	1912	1977.5	1875	1850	1830	1800	1011	505	375	412	468	340	130 – 455	435	899	1896
8205.500	–	1197	1192	1112	1075	455	475	1135	500	2005	1997	1912	1977.5	1875	1850	1830	1800	1011	505	375	412	468	340	130 – 455	435	1099	1896
8006.500	–	997	992	912	875	355	375	935	400	2005	1997	1912	1977.5	1875	1850	1830	1800	1011	605	475	512	568	440	130 – 555	535	899	1896
8206.500	**8451.X00**	1197	1192	1112	1075	455	475	1135	500	2005	1997	1912	1977.5	1875	1850	1830	1800	1011	605	475	512	568	440	130 – 555	535	1099	1896
8208.500	–	1197	1192	1112	1075	455	475	1135	500	2005	1997	1912	1977.5	1875	1850	1830	1800	1011	805	675	712	768	640	130 – 755	735	1099	1896
8226.500	–	1197	1192	1112	1075	455	475	1135	500	2205	2197	2112	2177.5	2075	2050	2030	2000	1111	605	475	512	568	440	130 – 555	535	1099	2096
8265.500	–	1197	1192	1112	1075	455	475	1135	500	1605	1597	1512	1577.5	1475	1450	1430	1400	811	505	375	412	468	340	130 – 455	435	1099	1496

Mounting plate

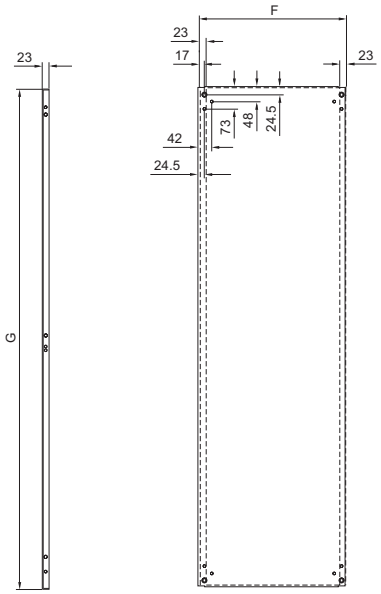

Cross-sections vertical

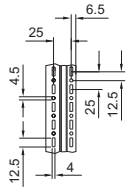

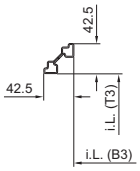

Horizontal

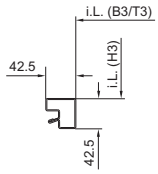

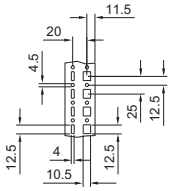

i.L. = Clearance width

Enclosure

B1 = Overall width
B2 = Width of door
B3 = Clearance of enclosure frame
B4 = Section length of system punchings/ hole spacing base/plinth attachment
B5 = Clearance of tubular door frame
B6 = Distance between axes of tubular door frame holes
B7 = Distance between the lifting eyes
B8 = Clearance in the base opening

H1 = Overall height
H2 = Height of rear panel
H3 = Clearance of enclosure frame
H4 = Height of door
H5 = Section length of system punchings
H6 = Distance between axes of tubular door frame holes
H7 = Clearance of tubular door frame
H8 = Distance between the fastening bolts of the tubular door frame
H9 = Distance from base to centre of lock

T1 = Overall depth
T2 = Section length of system punchings/ hole spacing base/plinth attachment
T3 = Clearance of enclosure frame
T4 = Depth of base frame
T5 = Clearance of base opening
T6 = Possible mounting depth (mounting plate assembly) depth-adjustable on a 25 mm pitch pattern
T7 = Centre of lifting eye to centre of lifting eye

Mounting plate

F = Overall width
G = Overall height

Single-door

Model No. TS		Width dimensions mm								Height dimensions mm									Depth dimensions mm							Mounting plates mm	
Spray-finished	Stainless steel	B1	B2	B3	B4	B5	B6	B7	B8	H1	H2	H3	H4	H5	H6	H7	H8	H9	T1	T2	T3	T4	T5	T6	T7	F	G
8615.500	–	597	592	512	475	455	475	535	440	1205	1197	1112	1177.5	1075	1050	1030	1000	611	505	375	412	468	340	130 – 455	435	499	1096
8815.500	–	797	792	712	675	655	675	735	640	1205	1197	1112	1177.5	1075	1050	1030	1000	611	505	375	412	468	340	130 – 455	435	699	1096
8645.500	–	597	592	512	475	455	475	535	440	1405	1397	1312	1377.5	1275	1250	1230	1200	711	505	375	412	468	340	130 – 455	435	499	1296
8845.500	–	797	792	712	675	655	675	735	640	1405	1397	1312	1377.5	1275	1250	1230	1200	711	505	375	412	468	340	130 – 455	435	499	1296
8684.500	–	597	592	512	475	455	475	535	440	1805	1797	1712	1777.5	1675	1650	1630	1600	911	405	275	312	368	240	130 – 355	335	499	1696
8884.500	**8454.X00**	797	792	712	675	655	675	735	640	1805	1797	1712	1777.5	1675	1650	1630	1600	911	405	275	312	368	240	130 – 355	335	699	1696
8084.500	–	997	992	912	875	855	875	935	400	1805	1797	1712	1777.5	1675	1650	1630	1600	911	405	275	312	368	240	130 – 355	335	899	1696
8485.510	–	397	392	312	275	255	275	335	240	1805	1797	1712	1777.5	1675	1650	1630	1600	911	505	375	412	468	340	130 – 455	435	–	–
8685.500	**8457.X00**	597	592	512	475	455	475	535	440	1805	1797	1712	1777.5	1675	1650	1630	1600	911	505	375	412	468	340	130 – 455	435	499	1696
8885.500	**8455.X00**	797	792	712	675	655	675	735	640	1805	1797	1712	1777.5	1675	1650	1630	1600	911	505	375	412	468	340	130 – 455	435	699	1696
8486.510	–	397	392	312	275	255	275	335	240	1805	1797	1712	1777.5	1675	1650	1630	1600	911	605	475	512	568	440	130 – 555	535	–	–
8686.500	–	597	592	512	475	455	475	535	440	1805	1797	1712	1777.5	1675	1650	1630	1600	911	605	475	512	568	440	130 – 555	535	499	1696
8886.500	–	797	792	712	675	655	675	735	640	1805	1797	1712	1777.5	1675	1650	1630	1600	911	605	475	512	568	440	130 – 555	535	699	1696
8604.500	–	597	592	512	475	455	475	535	440	2005	1997	1912	1977.5	1875	1850	1830	1800	1011	405	275	312	368	240	130 – 355	335	499	1896
8804.500	–	797	792	712	675	655	675	735	640	2005	1997	1912	1977.5	1875	1850	1830	1800	1011	405	275	312	368	240	130 – 355	335	699	1896
8405.510	–	397	392	312	275	255	275	335	240	2005	1997	1912	1977.5	1875	1850	1830	1800	1011	505	375	412	468	340	130 – 455	435	–	–
8605.500	–	597	592	512	475	455	475	535	440	2005	1997	1912	1977.5	1875	1850	1830	1800	1011	505	375	412	468	340	130 – 455	435	499	1896
8805.500	–	797	792	712	675	655	675	735	640	2005	1997	1912	1977.5	1875	1850	1830	1800	1011	505	375	412	468	340	130 – 455	435	699	1896
8406.510	–	397	392	312	275	255	275	335	240	2005	1997	1912	1977.5	1875	1850	1830	1800	1011	605	475	512	568	440	130 – 555	535	–	–
8606.500	**8452.X00**	597	592	512	475	455	475	535	440	2005	1997	1912	1977.5	1875	1850	1830	1800	1011	605	475	512	568	440	130 – 555	535	499	1896
8806.500	**8450.X00**	797	792	712	675	655	675	735	640	2005	1997	1912	1977.5	1875	1850	1830	1800	1011	605	475	512	568	440	130 – 555	535	699	1896
8608.500	–	597	592	512	475	455	475	535	440	2005	1997	1912	1977.5	1875	1850	1830	1800	1011	805	675	712	768	640	130 – 755	735	499	1896
8808.500	–	797	792	712	675	655	675	735	640	2005	1997	1912	1977.5	1875	1850	1830	1800	1011	805	675	712	768	640	130 – 755	735	699	1896
8626.500	–	597	592	512	475	455	475	535	440	2205	2197	2112	2177.5	2075	2050	2030	2000	1111	605	475	512	568	440	130 – 555	535	499	2096
8826.500	–	797	792	712	675	655	675	735	640	2205	2197	2112	2177.5	2075	2050	2030	2000	1111	605	475	512	568	440	130 – 555	535	699	2096
8665.500	–	597	592	512	475	455	475	535	440	1605	1597	1512	1577.5	1475	1450	1430	1400	811	505	375	412	468	340	130 – 455	435	499	1496
8865.500	–	797	792	712	675	655	675	735	640	1605	1597	1512	1577.5	1475	1450	1430	1400	811	505	375	412	468	340	130 – 455	435	699	1496

Enclosure systems

Baying systems TS 8

Electronic enclosures Catalogue 33, page 78

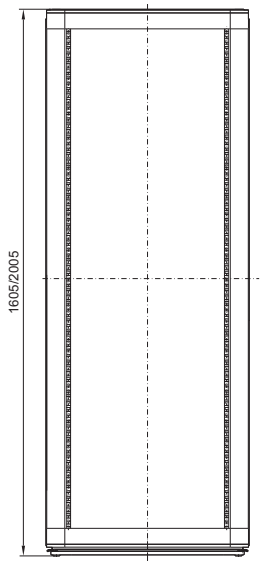

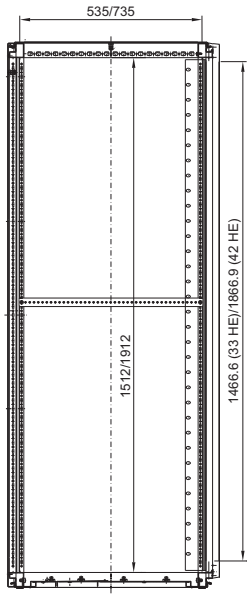

HE = U

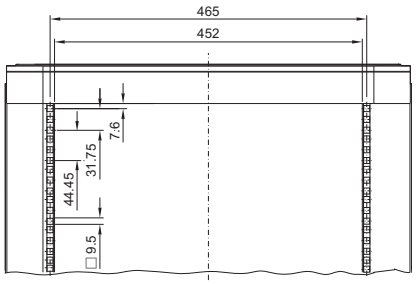

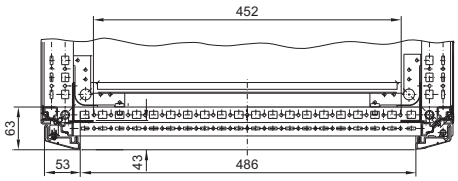

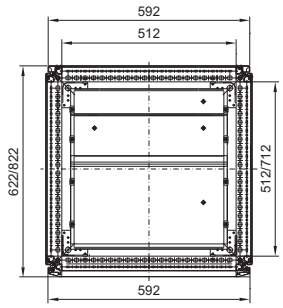

ISV-TS 8 enclosures

For ISV distribution enclosures up to 630 A Catalogue 33, page 82

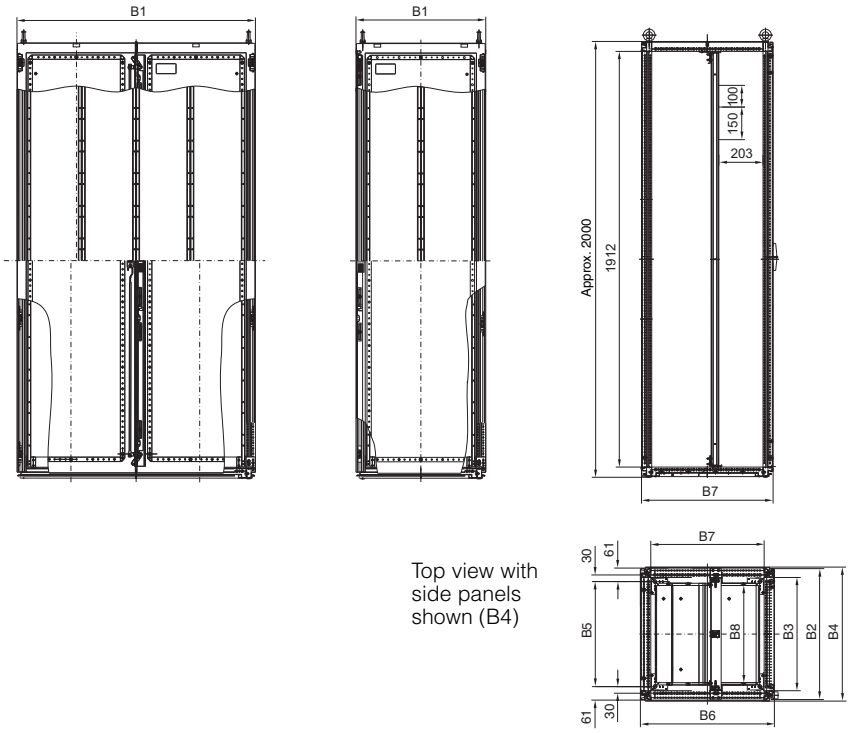

Top view with side panels shown (B4)

Width dimensions mm								Model No. SV
B1	B2	B3	B4	B5	B6	B7	B8	
597	592	512	606	475	605	512	440	**9665.905**
847	842	762	856	725	605	512	690	**9665.915**
1097	1092	1012	1106	975	605	512	940	**9665.925**
597	592	512	606	475	405	312	440	**9665.945**
847	842	762	856	725	405	312	690	**9665.955**
1097	1092	1012	1106	975	405	312	940	**9665.965**

Technical specifications		
Rated current up to	400 A	630 A
Rated surge current resistance I_{pk} at a maximum busbar support centre distance of 300 mm	30 kA	48 kA
Rated insulation voltage U_i to VDE 0110	1000 V AC	
Cross-section of phase conductor L1 – L3	30 x 5 mm	30 x 10 mm
Cross-section of neutral conductor N	25 x 10 mm	25 x 10 mm
Cross-section of PE conductor	12 x 10 mm	12 x 10 mm
Protective measures	Protection class 1 (with PE conductor)	
Overvoltage category	3	3
IP protection category	IP 20 without door, IP 55 with door	

Enclosure systems

ISV-TS 8 enclosures

For distribution enclosures up to 1600 A Catalogue 33, page 83

SV 9665.975

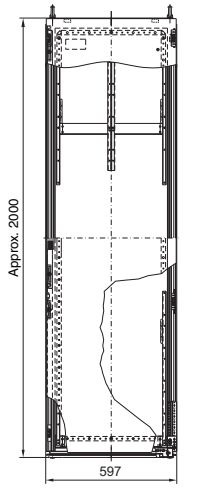

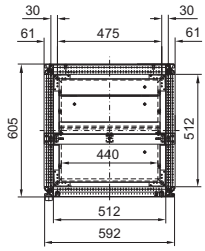

SV 9665.985

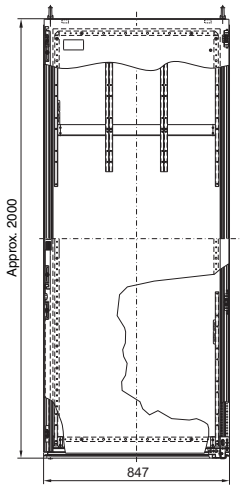

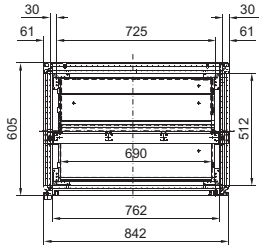

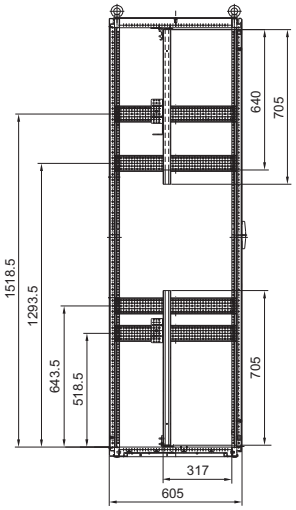

Note:

- For assembly and space reasons, a contact hazard protection module with 4 height units (600 mm) and 2 or 3 width units (500 or 750 mm), depending on the enclosure selection, is always required on the inlet or outlet side.
- When using Rittal NH fuse-switch disconnectors size 00 – 3 – see page 306/307 – care should be taken to ensure that a contact hazard protection module with at least one height unit (150 mm) is always mounted over the NH disconnectors, for thermal reasons.
- The contact hazard protection modules to cover the NH fuse-switch disconnectors all round will need to be machined by the customer.

SV-TS 8 enclosures

For Rittal Ri4Power applications Catalogue 33, page 84, 85

SV 9660.605, SV 9660.635,
SV 9660.805, SV 9660.835

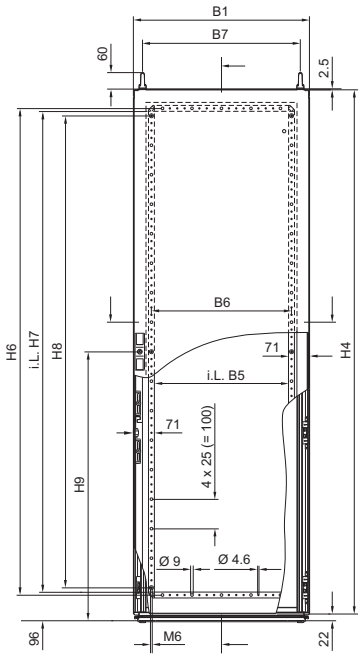

SV 9660.655, SV 9660.695,
SV 9660.855

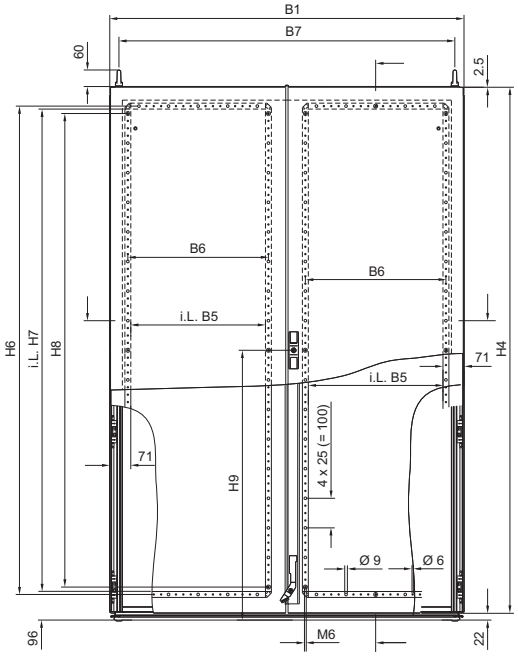

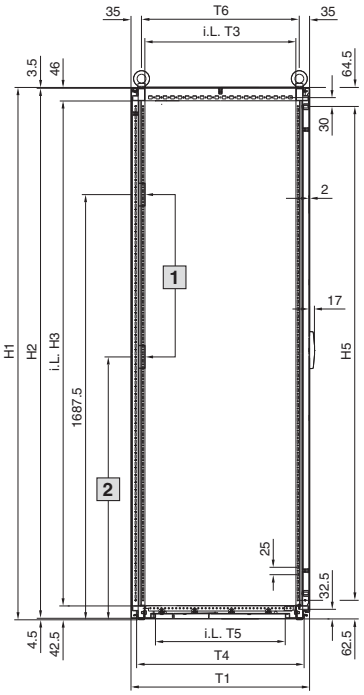

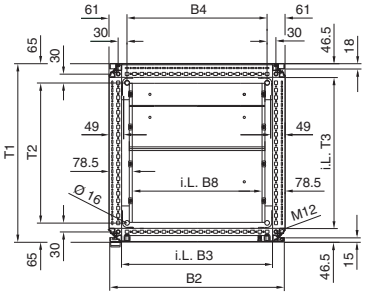

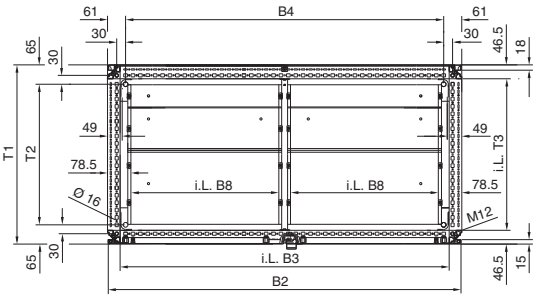

1 TS punched section with mounting flange, 23 x 73 mm

2 For Maxi-PLS
1600/2000 = 1037.5 mm
For Maxi-PLS
3200 = 1012.5 mm
(as delivered)

i.L. = Clearance width

Note:
With fitted side panels, the overall width (B1) is increased by 9 mm. Between bayed enclosures, allow 3 mm for the seal.

Cross-sections
vertical

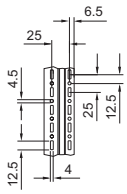

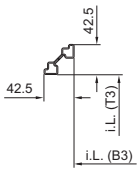

horizontal

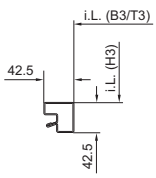

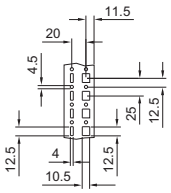

Model No. SV	Width dimensions mm								Height dimensions mm									Depth dimensions mm					
	B1	B2	B3	B4	B5	B6	B7	B8	H1	H2	H3	H4	H5	H6	H7	H8	H9	T1	T2	T3	T4	T5	T6
9660.605	597	592	512	475	455	475	535	440	2005	1997	1912	1977.5	1875	1850	1830	1800	1011	605	475	512	568	440	535
9660.635	797	792	712	675	655	675	735	640	2005	1997	1912	1977.5	1875	1850	1830	1800	1011	605	475	512	568	440	535
9660.655	1197	1192	1112	1075	455	475	1135	500	2005	1997	1912	1977.5	1875	1850	1830	1800	1011	605	475	512	568	440	535
9660.695	997	992	912	875	355	375	935	400	2005	1997	1912	1977.5	1875	1850	1830	1800	1011	605	475	512	568	440	535
9660.805	597	592	512	475	455	475	535	440	2005	1997	1912	1977.5	1875	1850	1830	1800	1011	805	675	712	768	640	735
9660.835	797	792	712	675	655	675	735	640	2005	1997	1912	1977.5	1875	1850	1830	1800	1011	805	675	712	768	640	735
9660.855	1197	1192	1112	1075	455	475	1135	500	2005	1997	1912	1977.5	1875	1850	1830	1800	1011	805	675	712	768	640	735

Enclosure systems

Enclosure

B1 = Overall width
B2 = Width of door
B3 = Clearance of enclosure frame
B4 = Section length of system punchings/ hole spacing base/plinth attachment
B5 = Clearance of tubular door frame
B6 = Distance between axes of tubular door frame holes
B7 = Distance between the lifting eyes
B8 = Clearance in the base opening

H1 = Overall height
H2 = Height of rear panel
H3 = Clearance of enclosure frame
H4 = Height of door
H5 = Section length of system punchings
H6 = Distance between axes of tubular door frame holes
H7 = Clearance of tubular door frame
H8 = Distance between the fastening bolts of the tubular door frame
H9 = Distance from base to centre of lock

T1 = Overall depth
T2 = Section length of system punchings/ hole spacing base/plinth attachment
T3 = Clearance of enclosure frame
T4 = Depth of base frame
T5 = Clearance of base opening
T6 = Centre of lifting eye to centre of lifting eye

SV-TS 8 modular enclosures

Catalogue 33, page 86 – 88

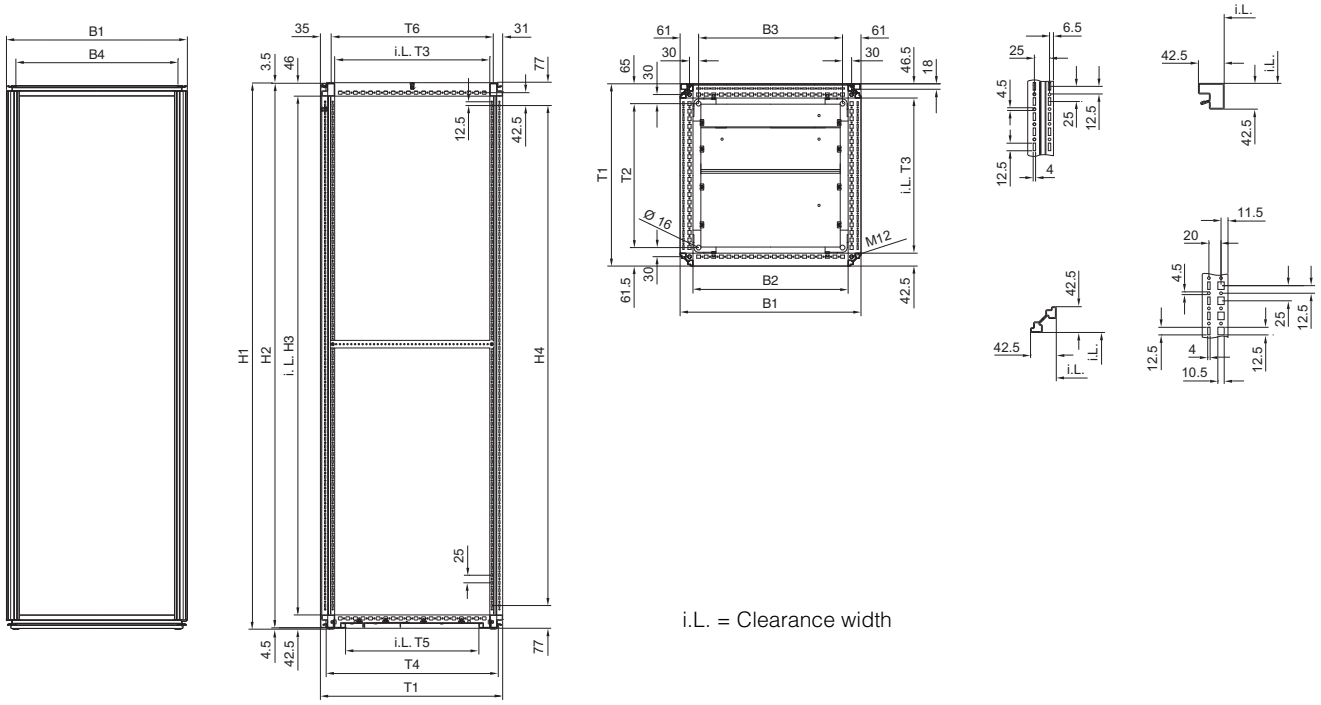

i.L. = Clearance width

Model No. SV	Width dimensions mm				Height dimensions mm				Depth dimensions mm					
	B1	B2	B3	B4	H1	H2	H3	H4	T1	T2	T3	T4	T5	T6
9670.406	397	312	275	335	2005	1997	1912	1850	601.5	475	512	568	440	535
9670.408	397	312	275	335	2005	1997	1912	1850	801.5	675	712	768	640	735
9670.426	397	312	275	335	2205	2197	2112	2050	601.5	475	512	568	440	535
9670.428	397	312	275	335	2205	2197	2112	2050	801.5	675	712	768	640	735
9670.486	397	312	275	335	1805	1797	1712	1650	601.5	475	512	568	440	535
9670.606	597	512	475	535	2005	1997	1912	1850	601.5	475	512	568	440	535
9670.608	597	512	475	535	2005	1997	1912	1850	801.5	675	712	768	640	735
9670.626	597	512	475	535	2205	2197	2112	2050	601.5	475	512	568	440	535
9670.628	597	512	475	535	2205	2197	2112	2050	801.5	675	712	768	640	735
9670.686	597	512	475	535	1805	1797	1712	1650	601.5	475	512	568	440	535
9670.806	797	712	675	735	2005	1997	1912	1850	601.5	475	512	568	440	535
9670.808	797	712	675	735	2005	1997	1912	1850	801.5	675	712	768	640	735
9670.826	797	712	675	735	2205	2197	2112	2050	601.5	475	512	568	440	535
9670.828	797	712	675	735	2205	2197	2112	2050	801.5	675	712	768	640	735
9670.886	797	712	675	735	1805	1797	1712	1650	601.5	475	512	568	440	535

B1 = Overall width
B2 = Clearance of enclosure frame
B3 = Section length of system punchings/ hole spacing base/plinth attachment
B4 = Distance between the lifting eyes

H1 = Overall height
H2 = Height of rear panel
H3 = Clearance of enclosure frame
H4 = Section length of system punchings

T1 = Overall depth
T2 = Section length of system punchings/ hole spacing base/plinth attachment
T3 = Clearance of enclosure frame
T4 = Depth of base frame
T5 = Clearance of base opening
T6 = Centre of lifting eye to centre of lifting eye

Enclosure systems

SV-TS 8 cable chamber enclosures

Catalogue 33, page 89, 90

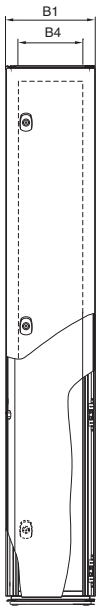

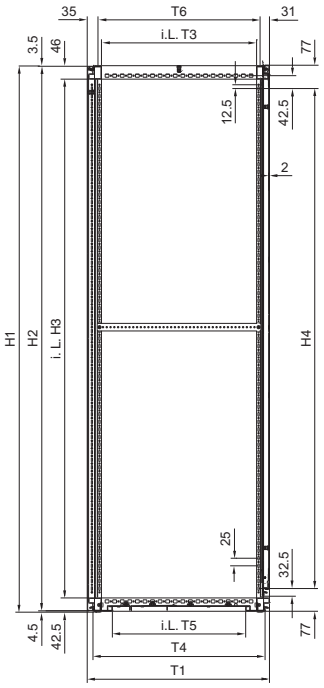

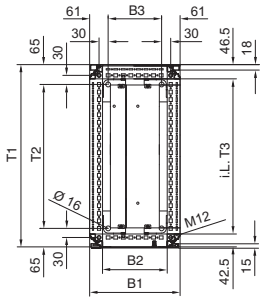

Cross-sections

vertical

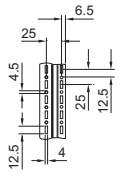

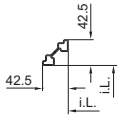

horizontal

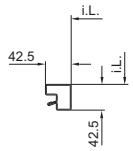

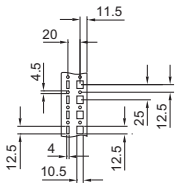

i.L. = Clearance width

Model No. SV	Width dimensions mm				Height dimensions mm				Depth dimensions mm					
	B1	B2	B3	B4	H1	H2	H3	H4	T1	T2	T3	T4	T5	T6
9670.316	297	212	175	235	2005	1997	1912	1850	605	475	512	568	440	535
9670.318	297	212	175	235	2005	1997	1912	1850	805	675	712	768	640	735
9670.336	297	212	175	235	2205	2197	2112	2050	605	475	512	568	440	535
9670.338	297	212	175	235	2205	2197	2112	2050	805	675	712	768	640	735
9670.396	297	212	175	235	1805	1797	1712	1650	605	475	512	568	440	535
9670.416	397	312	275	335	2005	1997	1912	1850	605	475	512	568	440	535
9670.418	397	312	275	335	2005	1997	1912	1850	805	675	712	768	640	735
9670.436	397	312	275	335	2205	2197	2112	2050	605	475	512	568	440	535
9670.438	397	312	275	335	2205	2197	2112	2050	805	675	712	768	640	735
9670.496	397	312	275	335	1805	1797	1712	1650	605	475	512	568	440	535
9670.616	597	512	475	535	2005	1997	1912	1850	605	475	512	568	440	535
9670.618	597	512	475	535	2005	1997	1912	1850	805	675	712	768	640	735
9670.636	597	512	475	535	2205	2197	2112	2050	605	475	512	568	440	535
9670.638	597	512	475	535	2205	2197	2112	2050	805	675	712	768	640	735
9670.696	597	512	475	535	1805	1797	1712	1650	605	475	512	568	440	535

B1 = Overall width
B2 = Clearance of enclosure frame
B3 = Section length of system punchings/ hole spacing base/plinth attachment
B4 = Distance between the lifting eyes

H1 = Overall height
H2 = Height of rear panel
H3 = Clearance of enclosure frame
H4 = Section length of system punchings

T1 = Overall depth
T2 = Section length of system punchings/ hole spacing base/plinth attachment
T3 = Clearance of enclosure frame
T4 = Depth of base frame
T5 = Clearance of base opening
T6 = Centre of lifting eye to centre of lifting eye

SV-TS 8 switch-disconnector-fuse enclosures

Catalogue 33, page 91, 92

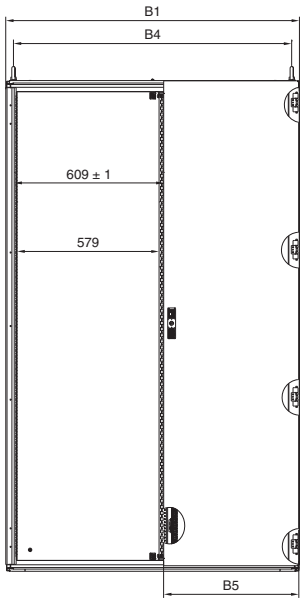

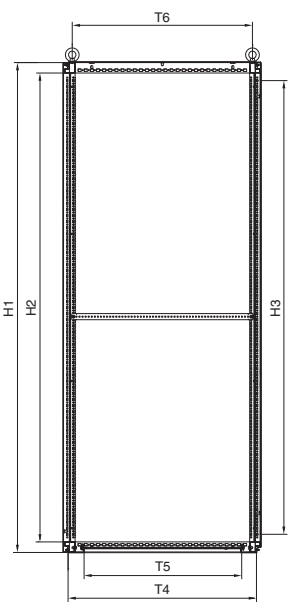

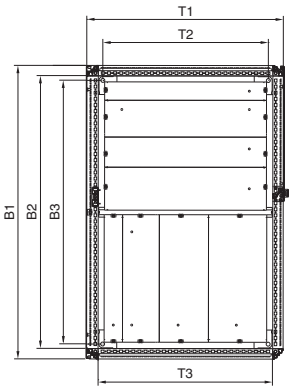

Cross-sections

vertical horizontal

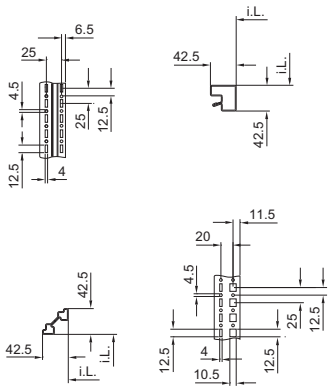

i.L. = Clearance width

Model No. SV	Width dimensions mm					Height dimensions mm			Depth dimensions mm					
	B1	B2	B3	B4	B5	H1	H2	H3	T1	T2	T3	T4	T5	T6
9670.006	997	912	875	935	350.5	1997	1912	1850	601.5	475	512	568	440	535
9670.008	997	912	875	935	350.5	1997	1912	1850	801.5	675	712	768	640	735
9670.026	997	912	875	935	350.5	2197	2112	2050	601.5	475	512	568	440	535
9670.028	997	912	875	935	350.5	2197	2112	2050	801.5	675	712	768	640	735
9670.106	1197	1112	1075	1135	550.5	1997	1912	1850	601.5	475	512	568	440	535
9670.108	1197	1112	1075	1135	550.5	1997	1912	1850	801.5	675	712	768	640	735
9670.126	1197	1112	1075	1135	550.5	2197	2112	2050	601.5	475	512	568	440	535
9670.128	1197	1112	1075	1135	550.5	2197	2112	2050	801.5	675	712	768	640	735

B1 = Overall width
B2 = Clearance of enclosure frame
B3 = Section length of system punchings/ hole spacing base/plinth attachment
B4 = Distance between the lifting eyes
B5 = Width of door

H1 = Overall height
H2 = Clearance of enclosure frame
H3 = Section length of system punchings

T1 = Overall depth
T2 = Section length of system punchings/ hole spacing base/plinth attachment
T3 = Clearance of enclosure frame
T4 = Depth of base frame
T5 = Clearance of base opening
T6 = Centre of lifting eye to centre of lifting eye

Enclosure systems

SV-TS 8 busbar enclosures

Catalogue 33, page 93

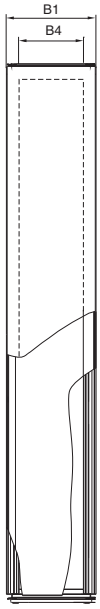

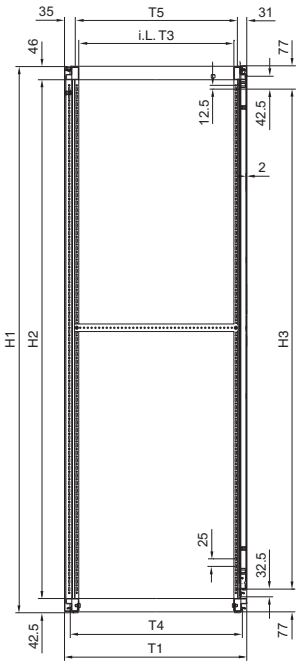

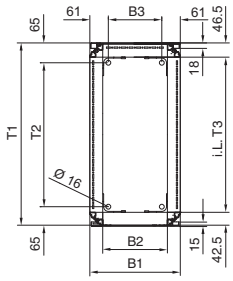

Cross-sections

vertical

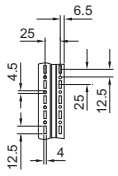

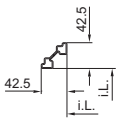

i.L. = Clearance width

Model No. SV	Width dimensions mm				Height dimensions mm			Depth dimensions mm				
	B1	B2	B3	B4	H1	H2	H3	T1	T2	T3	T4	T5
9670.206	197	112	75	75	1997	1912	1850	605	475	512	561	535
9670.208	197	112	75	75	1997	1912	1850	805	675	712	761	735
9670.226	197	112	75	75	2197	2112	2050	605	475	512	561	535
9670.228	197	112	75	75	2197	2112	2050	805	675	712	761	735

B1 = Overall width
B2 = Clearance of enclosure frame
B3 = Section length of system punchings/ hole spacing base/plinth attachment
B4 = Distance between the lifting eyes

H1 = Overall height
H2 = Clearance of enclosure frame
H3 = Section length of system punchings

T1 = Overall depth
T2 = Section length of system punchings/ hole spacing base/plinth attachment
T3 = Clearance of enclosure frame
T4 = Depth of base frame
T5 = Centre of lifting eye to centre of lifting eye

System enclosure SE 8

Spray-finished Catalogue 33, page 98

Stainless steel Catalogue 33, page 195

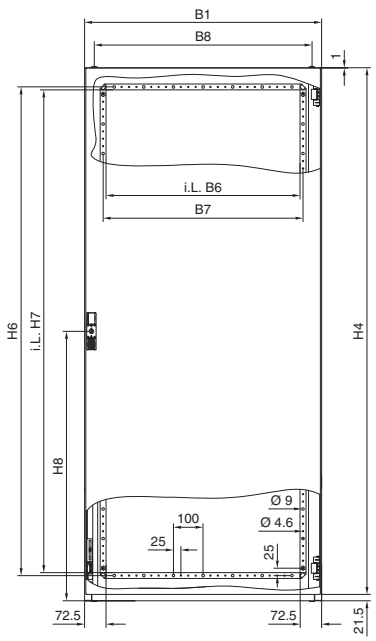

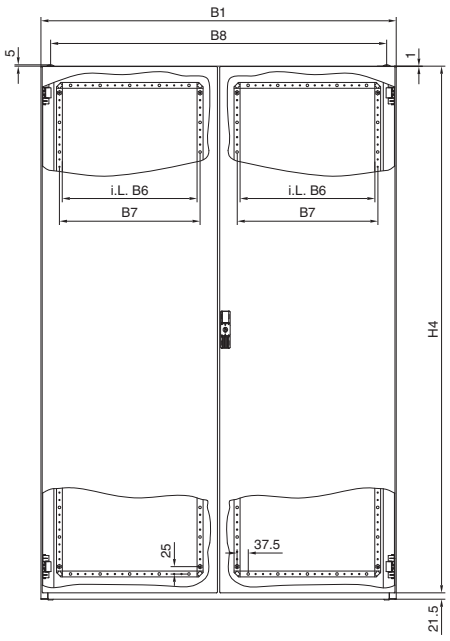

i.L. = Clearance width

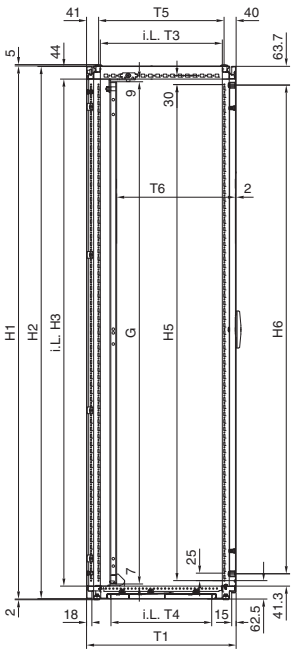

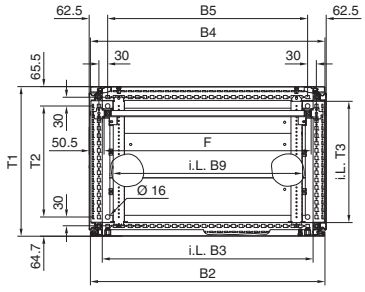

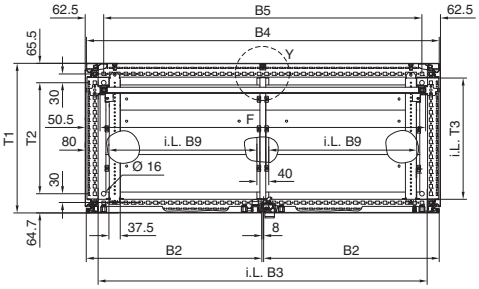

Detail Y (only for SE 5842.500 and SE 5846.500)

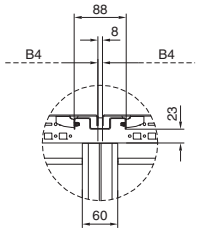

Single-door

Model No. SE		Width dimensions mm									Height dimensions mm								Depth dimensions mm						Mounting plates mm	
Spray-finished	Stainless steel	B1	B2	B3	B4	B5	B6	B7	B8	B9	H1	H2	H3	H4	H5	H6	H7	H8	T1	T2	T3	T4	T5	T6	F	G
5830.500	–	600	592	512	592	475	455	475	535	440	1800	1797	1712	1777.5	1675	1650	1630	910	405	275	312	240	324	126.5 – 356.5	499	1696
5831.500	–	800	792	712	792	675	655	675	735	640	1800	1797	1712	1777.5	1675	1650	1630	910	405	275	312	240	324		699	1696
5832.500	–	800	792	712	792	675	655	675	735	640	2000	1997	1912	1977.5	1875	1850	1830	1010	405	275	312	240	324		699	1896
5833.500	–	800	792	712	792	675	655	675	735	640	2000	1997	1912	1977.5	1875	1850	1830	1010	505	375	412	340	424	126.5 – 456.5	699	1896
5834.500	**5853.500**	800	792	712	792	675	655	675	735	640	2000	1997	1912	1977.5	1875	1850	1830	1010	605	475	512	440	524	126.5 – 556.5	699	1896
–	**5850.500**	600	592	512	592	475	455	475	535	440	1600	1597	1512	1577.5	1475	1450	1430	810	405	275	312	240	324	126.5 – 356.5	499	1496
–	**5851.500**	600	592	512	592	475	455	475	535	440	1800	1797	1712	1777.5	1675	1650	1630	910	505	375	412	340	424	126.5 – 456.5	499	1696
–	**5852.500**	800	792	712	792	675	655	675	735	640	1800	1797	1712	1777.5	1675	1650	1630	910	505	375	412	340	424		699	1696
–	**5854.500**	1000	992	912	992	875	855	875	935	400	1800	1797	1712	1777.5	1675	1650	1630	910	405	275	312	240	324	126.5 – 356.5	899	1696

Enclosure systems

System enclosure SE 8

Spray-finished Catalogue 33, page 98

Stainless steel Catalogue 33, page 195

Mounting plate

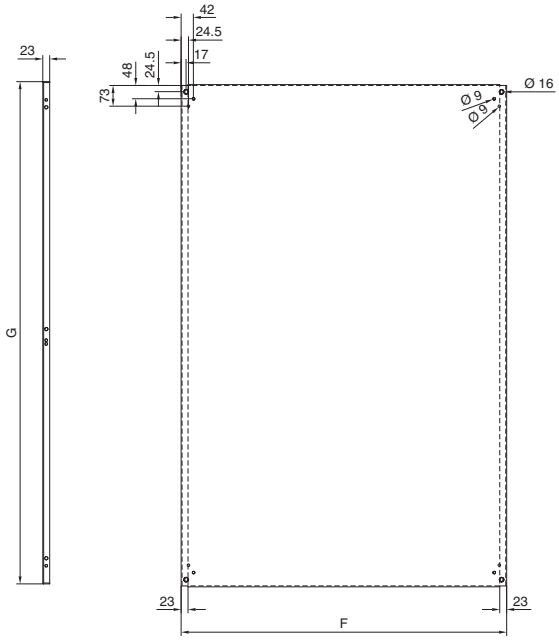

Enclosure

B1 = Overall width
B2 = Width of door
B3 = Clearance of enclosure frame
B5 = Section length of system punchings/ hole spacing base/plinth attachment
B6 = Clearance of tubular door frame
B7 = Distance between axes of tubular door frame holes
B8 = Distance between the lifting eyes
B9 = Clearance in the base opening

H1 = Overall height
H2 = Height of rear panel
H3 = Clearance of enclosure frame
H4 = Height of door
H5 = Section length of system punchings
H6 = Distance between axes of tubular door frame holes
H7 = Clearance of tubular door frame
H8 = Distance from base to centre of lock

T1 = Overall depth
T2 = Section length of system punchings/ hole spacing base/plinth attachment
T3 = Clearance of enclosure frame
T4 = Clearance of base opening
T5 = Centre of lifting eye to centre of lifting eye
T6 = Possible mounting depth (mounting plate assembly) up to 149 mm depth-adjustable on a 25 mm pitch pattern

Mounting plate

F = Overall width
G = Overall height

Cross-section

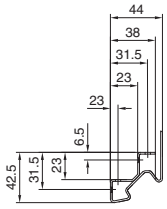

Pitch pattern of holes

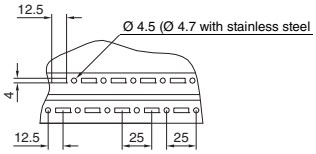

Enclosure corner top

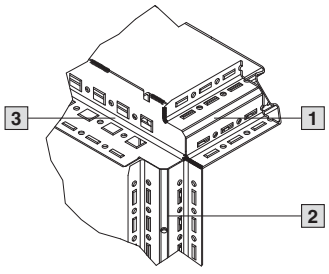

Enclosure corner bottom

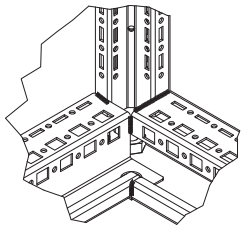

1 Width 2 Height 3 Depth

Double-door

Model No. SE		Width dimensions mm									Height dimensions mm								Depth dimensions mm						Mounting plates mm	
Spray-finished	Stainless steel	B1	B2	B3	B4	B5	B6	B7	B8	B9	H1	H2	H3	H4	H5	H6	H7	H8	T1	T2	T3	T4	T5	T6	F	G
5840.500	–	1000	492	912	992	875	355	375	935	400	1800	1797	1712	1777.5	1675	1650	1630	910	405	275	312	240	324		899	1696
5841.500	–	1200	592	1112	1192	1075	455	475	1135	500	1800	1797	1712	1777.5	1675	1650	1630	910	405	275	312	240	324	126.5 – 356.5	1099	1696
5842.500	–	1600	792	1512	792	1475	655	675	1535	690	1800	1797	1712	1777.5	1675	1650	1630	910	405	275	312	240	324		1499	1696
5843.500	–	1200	592	1112	1192	1075	455	475	1135	500	2000	1997	1912	1977.5	1875	1850	1830	1010	405	275	312	240	324		1099	1896
5844.500	**5855.500**	1200	592	1112	1192	1075	455	475	1135	500	2000	1997	1912	1977.5	1875	1850	1830	1010	505	375	412	340	424	126.5 – 456.5	1099	1896
5845.500	–	1200	592	1112	1192	1075	455	475	1135	500	2000	1997	1912	1977.5	1875	1850	1830	1010	605	475	512	440	524	126.5 – 556.5	1099	1896
5846.500	–	1800	892	1712	892	1675	755	775	1735	790	2000	1997	1912	1977.5	1875	1850	1830	1010	505	375	412	340	424		1699	1896

Network enclosures TS 8

Pre-configured, doors unvented Catalogue 33, page 102

DK 7830.100

Front view

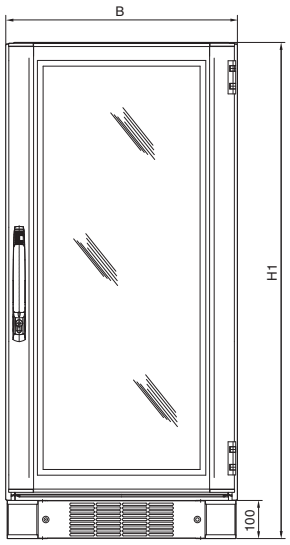

Side view

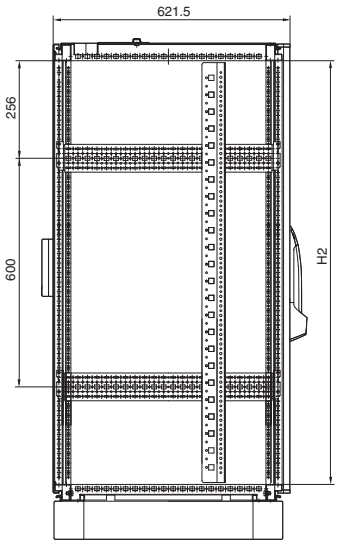

Rear view

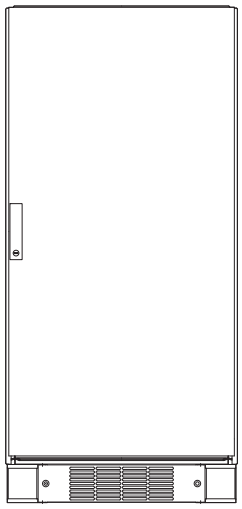

Top view

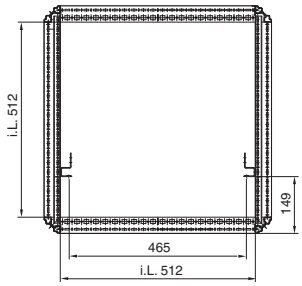

Top view without
482.6 mm (19˝) mounting angles

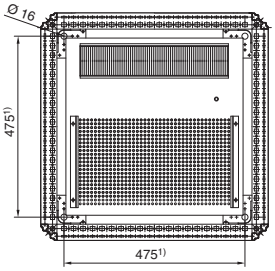

¹⁾ Base/plinth attachment

i.L. = Clearance width

Model No. DK	U	Width dimensions mm	Height dimensions mm	
		B	H1	H2
7830.100	24	606	1302	1112

Network distribution enclosures

Network enclosures TS 8

Pre-configured, doors unvented Catalogue 33, page 102, 103

Front view

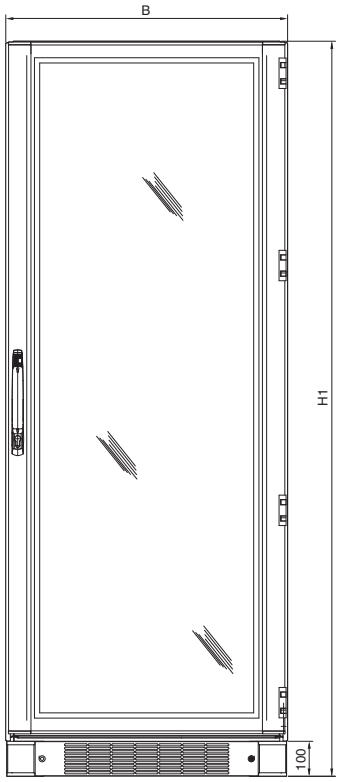

Side view

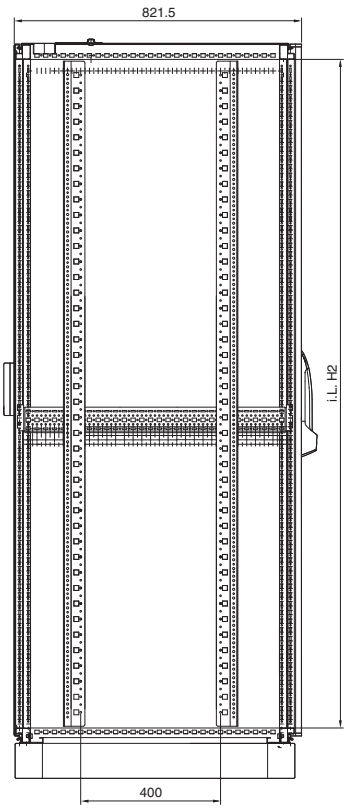

Rear view

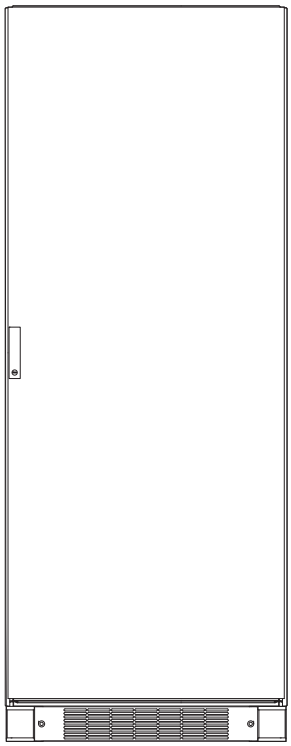

Top view

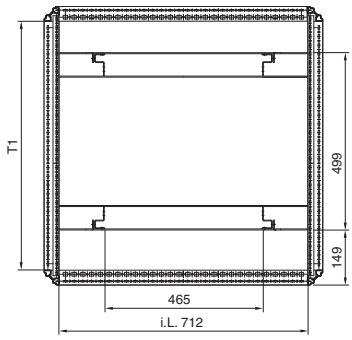

Top view without
482.6 mm (19″) mounting angles

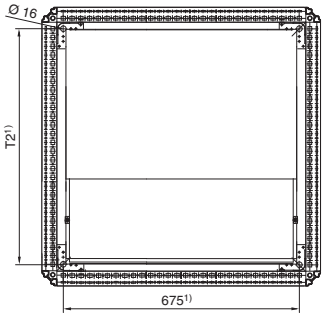

i.L. = Clearance width

¹⁾ Base/plinth attachment

Model No. DK	U	Width dimensions mm	Height dimensions mm		Depth dimensions mm	
		B	H1	H2	T1	T2
7830.110	24	806	1302	1112	712	675
7830.850	38	797	1902	1712	712	675
7830.200	42	806	2102	1912	712	675
7830.250	42	797	2102	1912	712	675
7830.202	42	806	2102	1912	712	675
7830.230	42	806	2102	1912	912	875
7830.240	42	797	2102	1912	912	875
7830.270	47	797	2302	2112	712	675

Network enclosures TS 8

Pre-configured, doors vented Catalogue 33, page 103

Front view

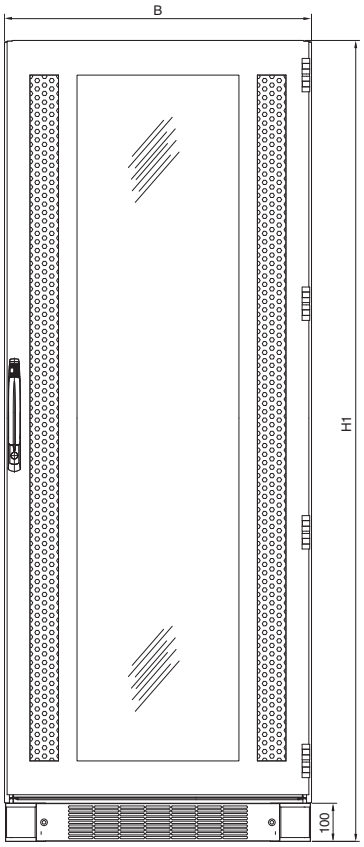

Side view

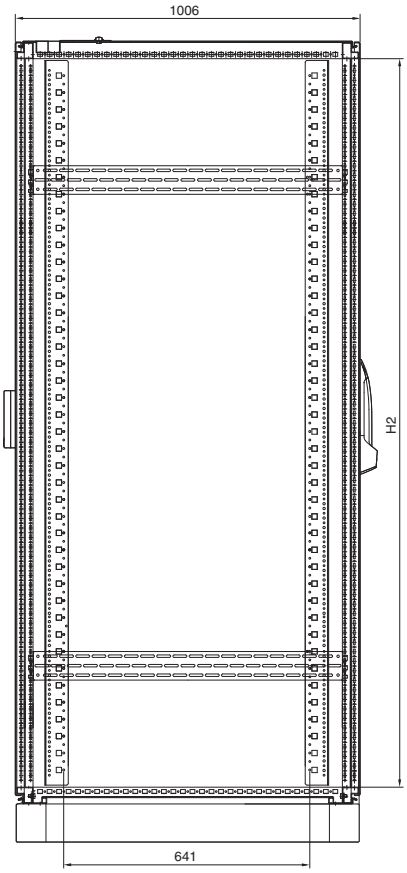

Rear view

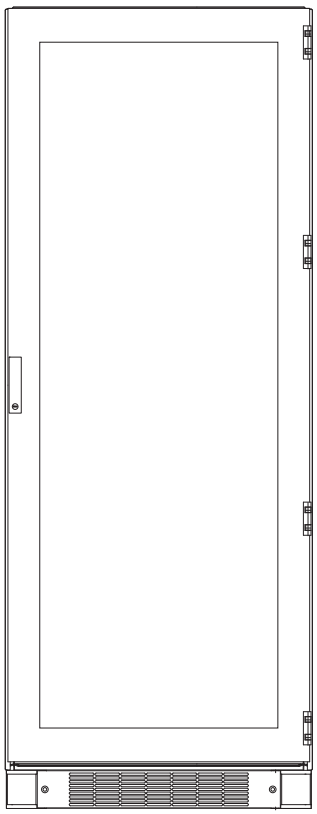

Top view

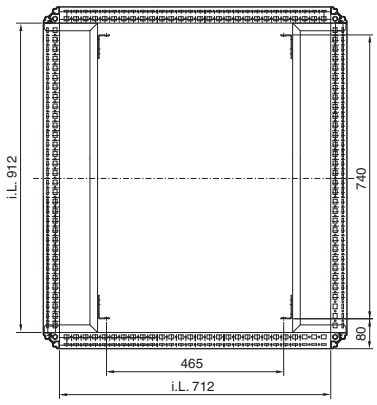

Top view without
482.6 mm (19″) mounting angles

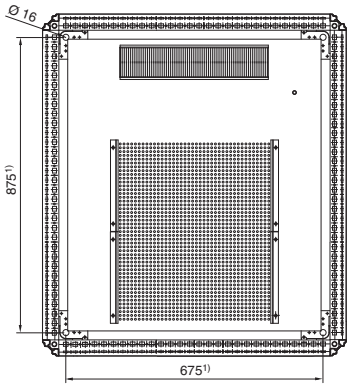

i.L. = Clearance width

1) Base/plinth attachment

Model No. DK	U	Width dimensions mm	Height dimensions mm	
		B	H1	H2
7830.130	24	806	1302	1112
7830.330	42	806	2102	1912
7830.335	42	797	2102	1912
7830.380	47	797	2302	2112

Network distribution enclosures

Network enclosures TS 8

Pre-configured, doors/rear wall unvented Catalogue 33, page 104

DK 7830.550

Front view

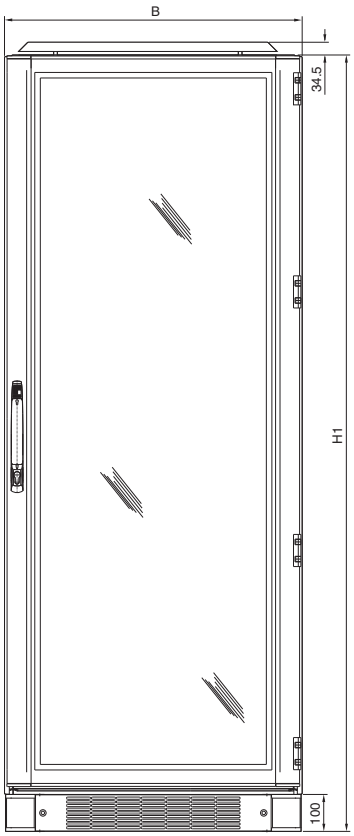

Side view

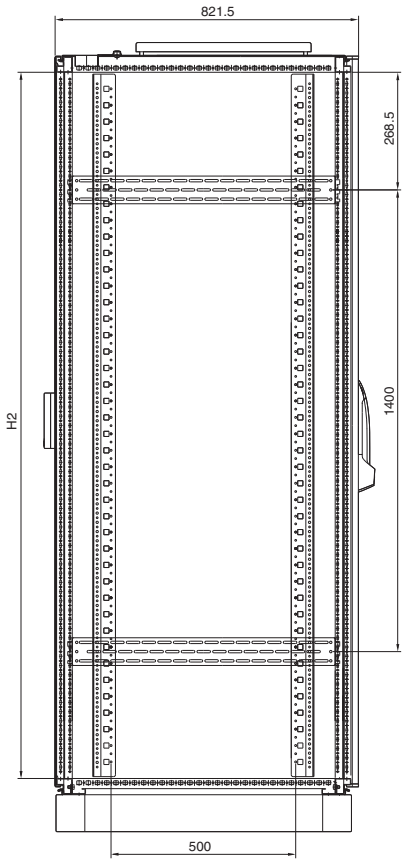

Rear view

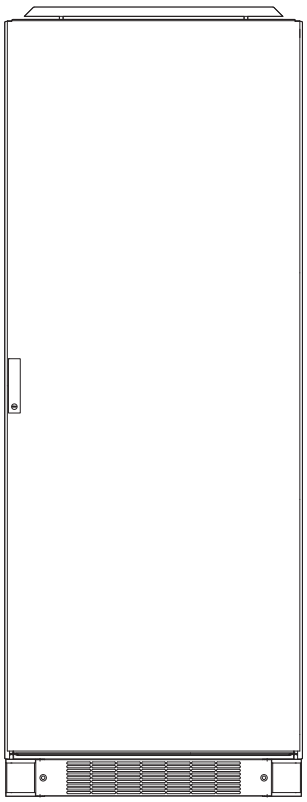

Top view

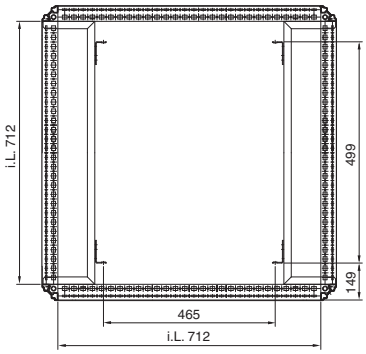

Top view without
482.6 mm (19˝) mounting angles

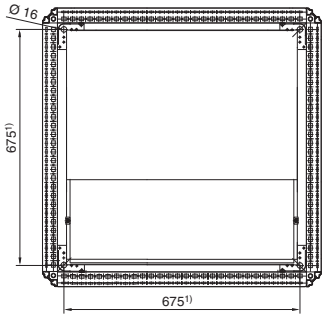

Top view with vent panel

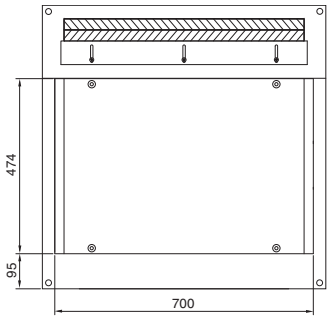

1) Base/plinth attachment

Model No. DK	U	Width dimensions mm	Height dimensions mm	
		B	H1	H2
7830.550	42	797	2102	1912

i.L. = Clearance width

Network enclosures TS 8

Pre-configured, doors/rear wall unvented Catalogue 33, page 104

DK 7830.670

Front view

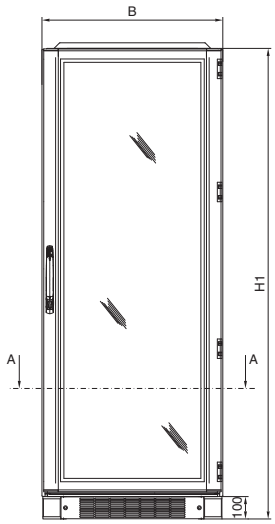

Side view without side panel

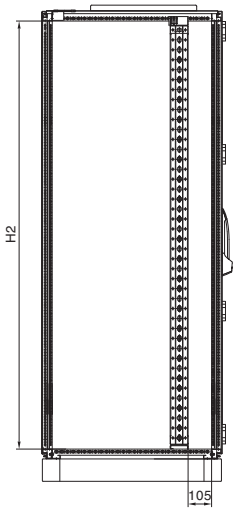

Front view without door

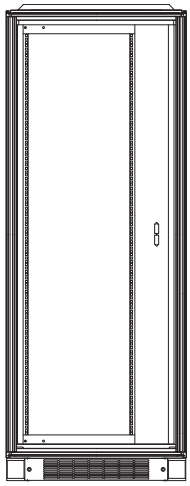

Top view

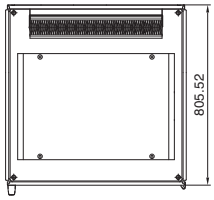

Section A – A

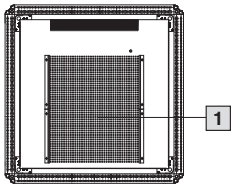

Top view without roof

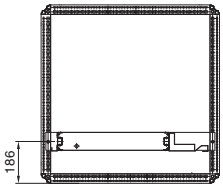

1 Gland plate will be pre-configured
1 brush strip
4 sections for filter mats
8 screws

Model No. DK	U	Width dimensions mm	Height dimensions mm	
		B	H1	H2
7830.670	40	806	2102	1912

Network distribution enclosures

Network enclosures TS 8

Pre-configured, doors unvented, divided Catalogue 33, page 104

DK 7830.260

Front view

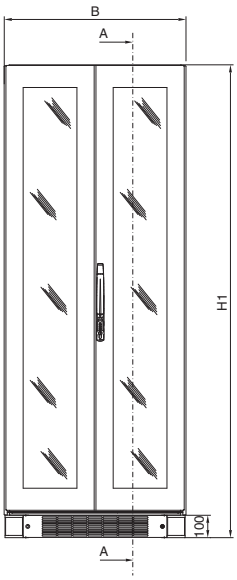

Rear view



Section A – A

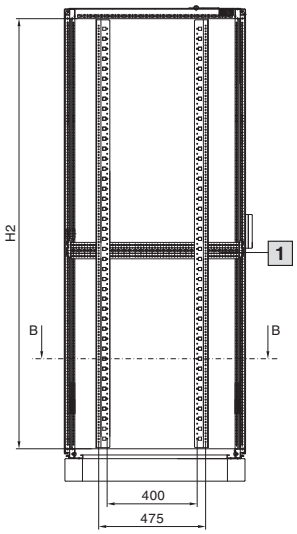

Top view

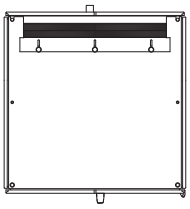

1 Serves as shipping braces

Section B – B

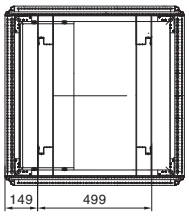

Model No. DK	U	Width dimensions mm	Height dimensions mm	
		B	H1	H2
7830.270	42	797	2102	1912

Network enclosures TS 8

Catalogue 33, page 105, 106

Front view

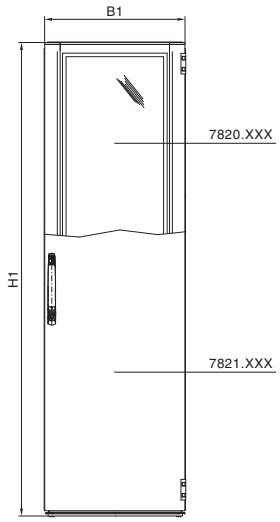

Side view

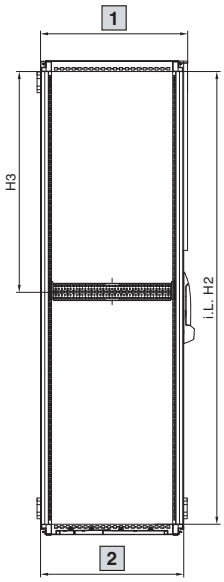

Rear view

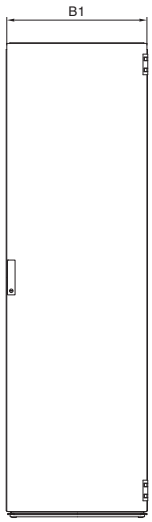

Top view

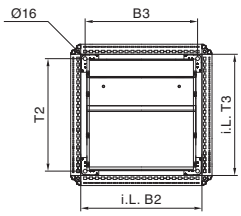

1 T1 for glazed door

2 T1 for sheet steel door

i.L. = Clearance width

Model No. DK		Width dimensions mm			Height dimensions mm			Depth dimensions mm			
Glazed door	Sheet steel door	B1	B2	B3	H1	H2	H3	T1 Glazed door	T1 Sheet steel door	T2	T3
7820.100	**7821.100**	597	512	475	805	712	431	622	605	512	475
7820.200	**7821.200**	597	512	475	1005	912	531	622	605	512	475
7820.240	**7821.240**	797	712	675	1005	912	531	622	605	512	475
7820.300	**7821.300**	597	512	475	1205	1112	631	622	605	512	475
7820.340	**7821.340**	797	712	675	1205	1112	631	622	605	512	475
7820.350	**–**	797	712	675	1205	1112	631	822	–	712	675
7820.410	**7821.410**	597	512	475	1405	1312	731	822	805	712	675
7820.500	**7821.500**	597	512	475	1605	1512	831	622	605	512	475
7820.510	**7821.510**	597	512	475	1605	1512	831	822	805	512	675
7820.600	**7821.600**	597	512	475	1805	1712	931	622	605	512	475
7820.610	**7821.610**	597	512	475	1805	1712	931	822	805	712	675
7820.650	**7821.650**	797	712	675	1805	1712	931	822	805	712	675
7820.670	**7821.670**	797	712	675	1805	1712	931	1022	1005	912	875
7820.700	**7821.700**	597	512	475	2005	1912	1031	622	605	512	475
7820.710	**7821.710**	597	512	475	2005	1912	1031	822	805	712	675
7820.730	**7821.730**	597	512	475	2005	1912	1031	1022	1005	912	875
7820.740	**7821.740**	797	712	675	2005	1912	1031	622	605	512	475
7820.750	**7821.750**	797	712	675	2005	1912	1031	822	805	712	675
7820.770	**7821.770**	797	712	675	2005	1912	1031	1022	1005	912	875
7820.800	**7821.800**	597	512	475	2205	2112	1031	622	605	512	475
7820.810	**7821.810**	597	512	475	2205	2112	1031	822	805	712	675
7820.850	**7821.850**	797	712	675	2205	2112	1031	822	805	712	675

Network distribution enclosures

Network enclosures TE 7000

Catalogue 33, page 107

Front view

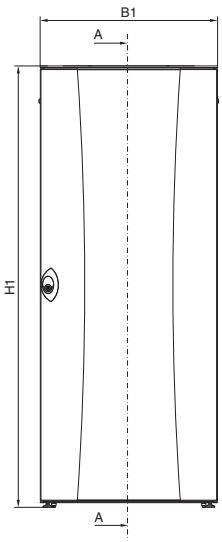

Side view

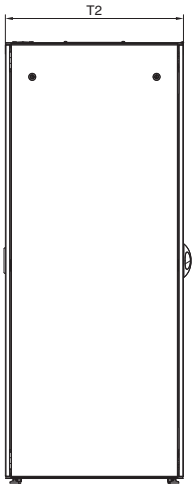

Front view
without door,
width 600 mm

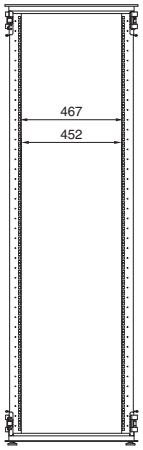

Side view
without side panel

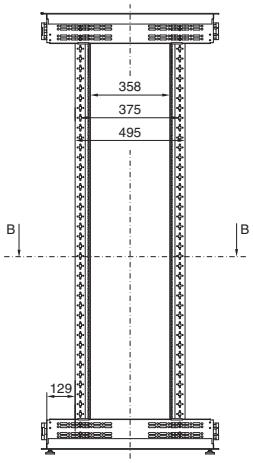

Top view

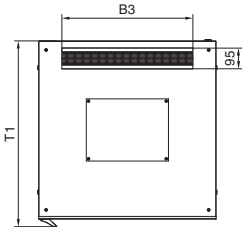

Section A – A

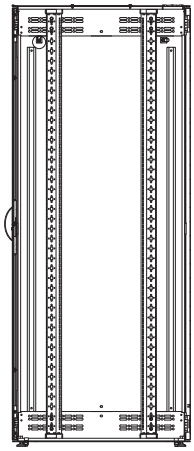

Front view
without door,
width 800 mm

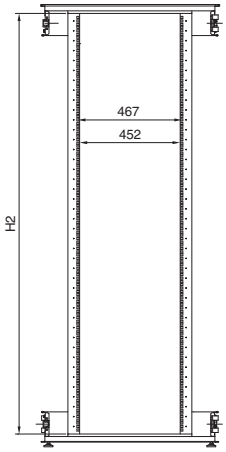

Top view
without cover plate and brush strip

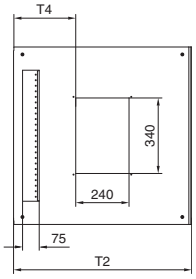

Section B – B

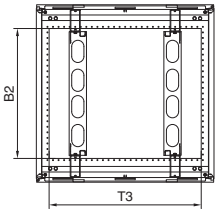

Model No. DK	Width dimensions mm			Height dimensions mm	Depth dimensions mm				
	B1	B2	B3	H1	H2	T1	T2	T3	T4
7000.840	799	585	590	1190	1090	842.98	802	685	280
7000.850	799	585	590	1990	1890	842.98	802	685	280
7000.852	799	585	590	1990	1890	842.98	802	685	280
7000.390	599	385	390	590	490	642.98	602	485	180
7000.410	599	385	390	590	490	842.98	802	685	280
7000.430	599	385	390	1190	1090	642.98	602	485	180
7000.440	599	385	390	1190	1090	842.98	802	685	280
7000.500	599	385	390	1990	1890	642.98	602	485	180
7000.510	599	385	390	1990	1890	842.98	802	685	280
7000.560	599	385	390	2190	2090	642.98	602	485	180
7000.570	599	385	390	2190	2090	842.98	802	685	280
7000.450	799	585	590	1190	1090	642.98	602	485	180
7000.460	799	585	590	1190	1090	842.98	802	685	280
7000.520	799	585	590	1990	1890	642.98	602	485	180
7000.530	799	585	590	1990	1890	842.98	802	685	280
7000.532	799	585	590	1990	1890	842.98	802	685	280
7000.580	799	585	590	2190	2090	642.98	602	485	180
7000.590	799	585	590	2190	2090	842.98	802	685	280
7000.592	799	585	590	2190	2090	842.98	802	685	280

Distributor racks

TE 7000 open Catalogue 33, page 110

DK 7000.940

Front view

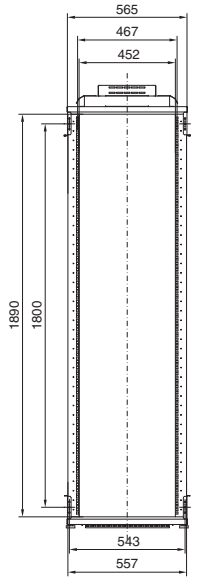

Top view

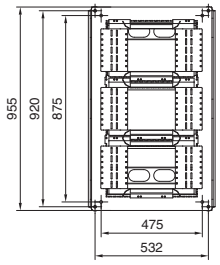

DK 7000.944

Front view

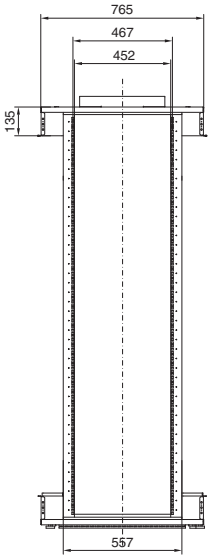

Top view

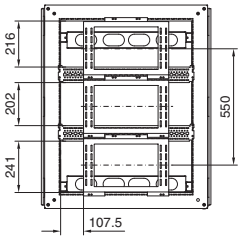

Side view

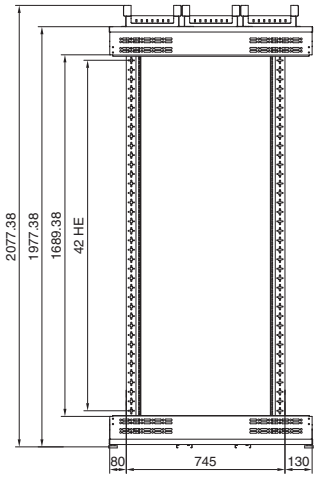

HE = U

Data Rack Catalogue 33, page 111

Front view

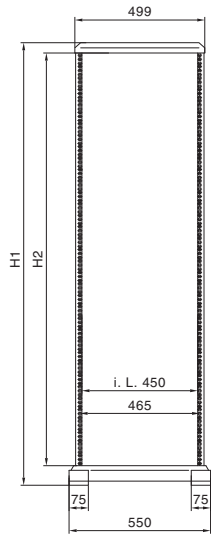

Side view

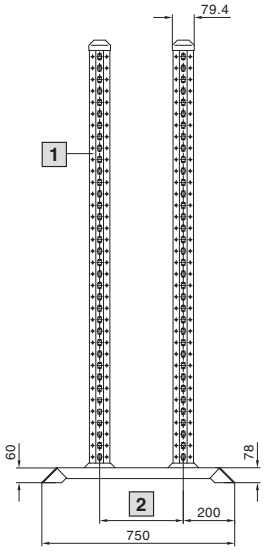

1 Second pair of mounting angles
DK 7296.000/31 U
DK 7297.000/36 U
DK 7298.000/40 U
DK 7299.000/45 U

2 On a 50 mm pitch pattern
(min. 150 – max. 350)

i.L. = Clearance width

Model No. DK	U	Height dimensions mm	
		H1	H2
7391.000	31	1500	i.L. 1382
7396.000	36	1722	i.L. 1604
7400.000	40	1900	i.L. 1782
7445.000	45	2122	i.L. 2004

Server enclosures

Server enclosures TS 8

Catalogue 33, page 114

DK 7831.433, DK 7831.438, DK 7831.481, DK 7831.442

Front view

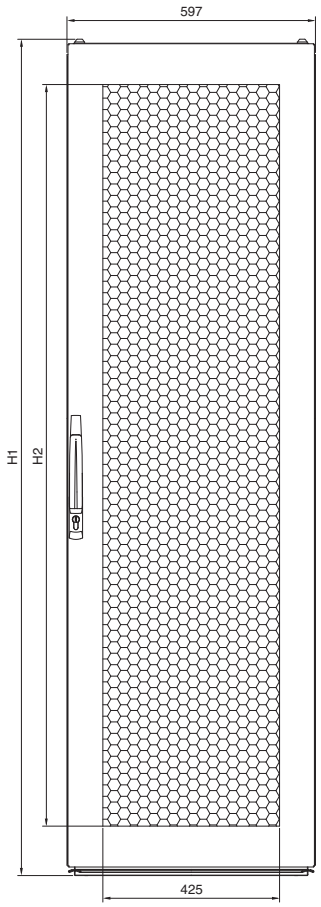

Side view

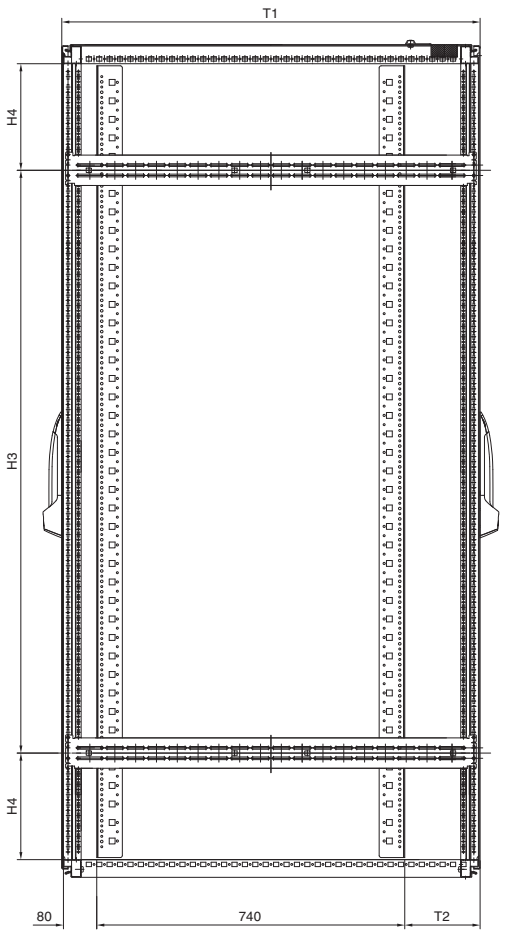

Top view

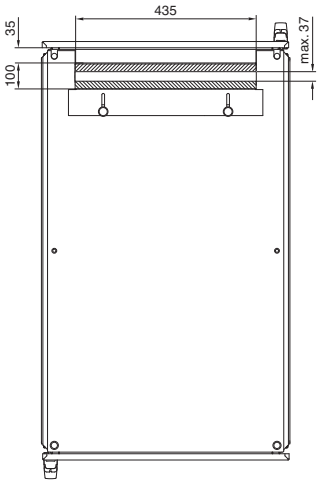

Model No. DK	U	Height dimensions mm				Depth dimensions mm	
		H1	H2	H3	H4	T1	T2
7831.433	24	1209	984	750	181	1005	177
7831.438	42	2009	1782	1400	256	1005	177
7831.481	42	2009	1782	1400	256	1205	377
7831.442	47	2209	1983	1600	256	1005	177

Server enclosures TS 8

Catalogue 33, page 114

DK 7831.446, DK 7831.485

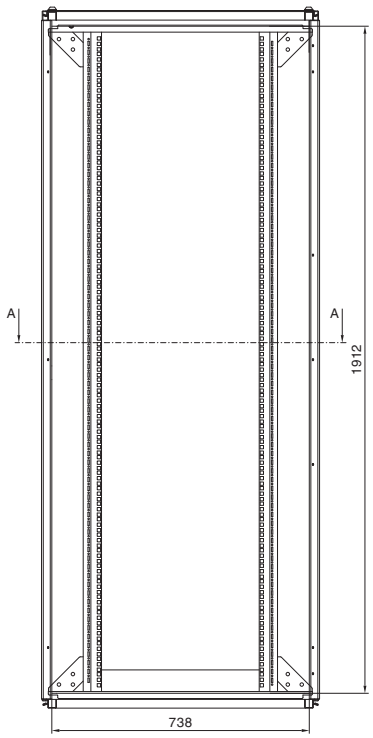

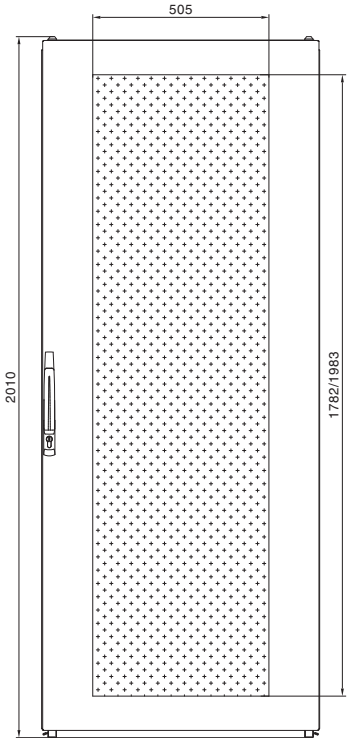

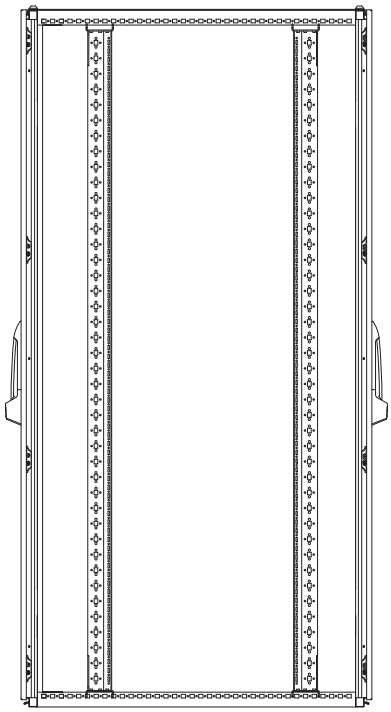

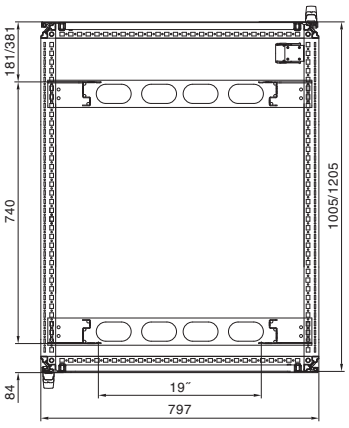

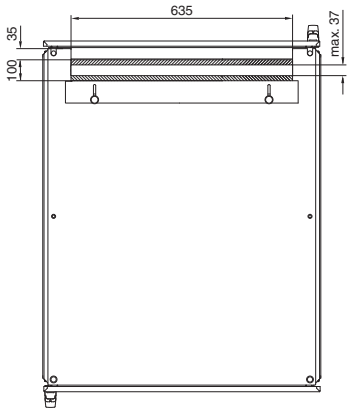

Server enclosures

Server enclosures TS 8

Colocation Catalogue 33, page 115

DK 7831.453

Front view

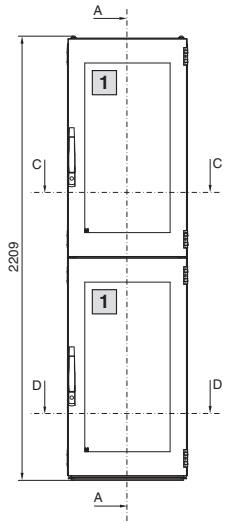

Front view without doors

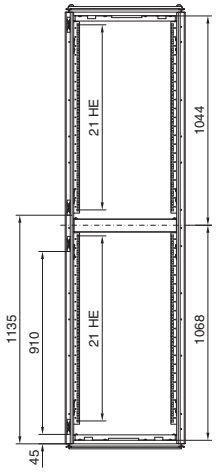

Side view

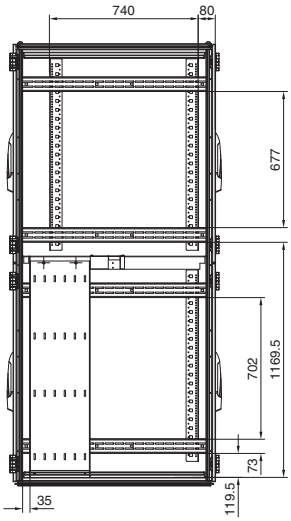

Section A – A

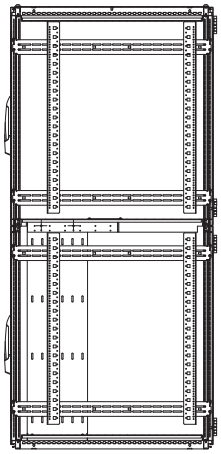

DK 7831.463

Front view

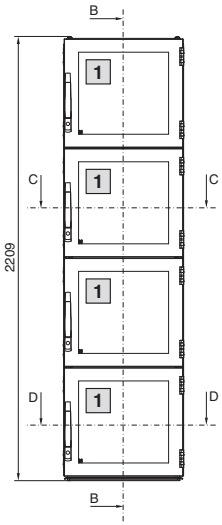

Front view without doors

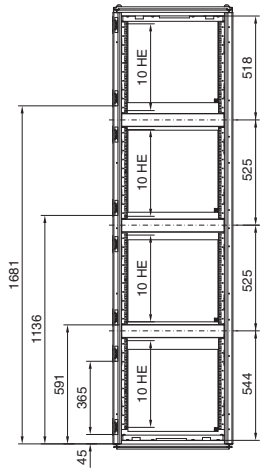

Side view

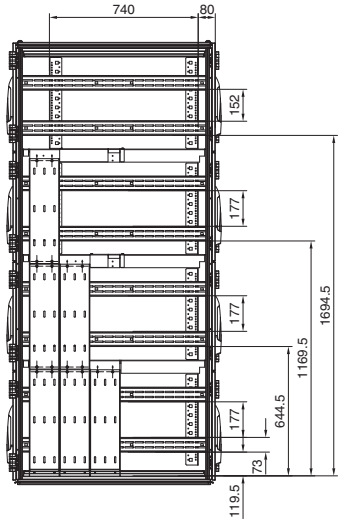

Section B – B

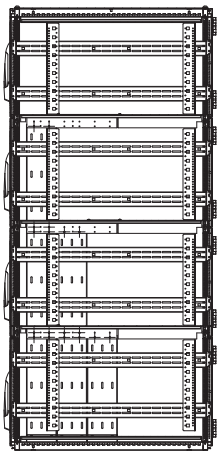

Top view

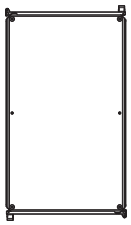

Section C – C

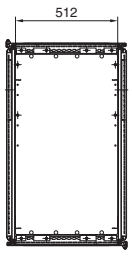

Section D – D

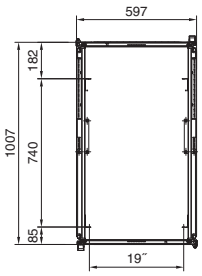

1 Perforated area

Model No. DK	U (HE)
7831.453	2 x 21
7831.463	4 x 10

Server enclosures TS 8

For High Performance Cooling systems HPC Catalogue 33, page 116

Front view

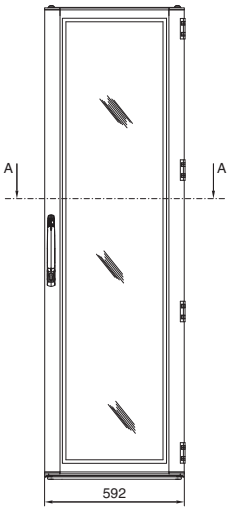

Front view without doors

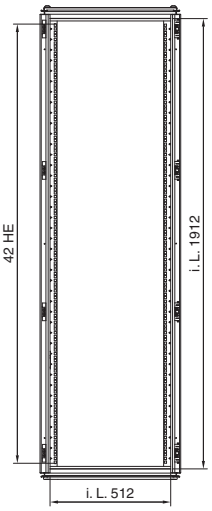

Side view

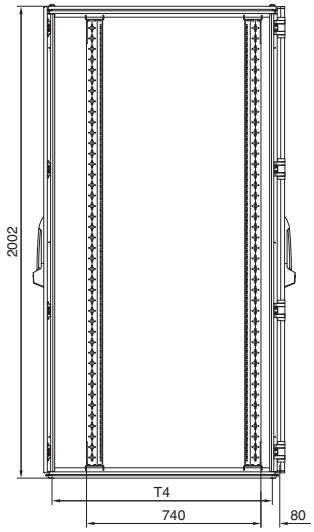

Rear view



Top view

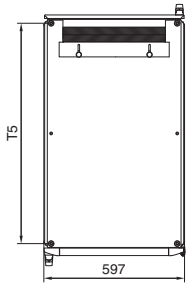

Section A – A

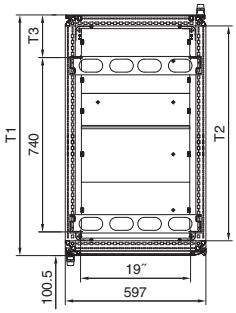

i.L. = Clearance width

Model No. DK	U (HE)	Depth dimensions mm				
		T1	T2	T3	T4	T5
7831.810	42	1021.5	912	161	935	935
7831.812	42	1221.5	1112	311	1135	1135
7831.813	42	1221.5	1112	311	1135	1135

Server enclosures

Server enclosures TS 8

For High Performance Cooling systems HPC Catalogue 33, page 116

Front view

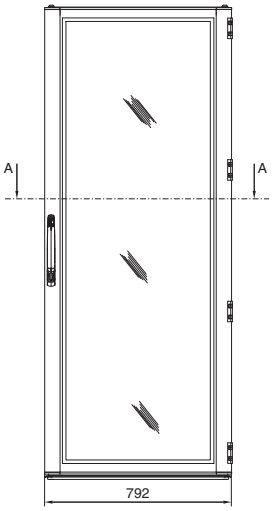

Front view
without doors

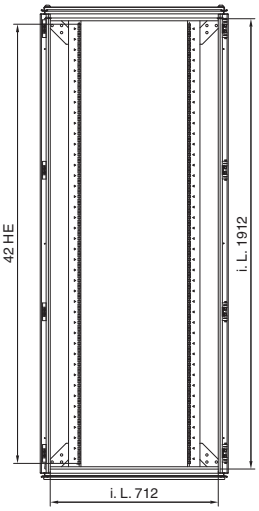

Side view

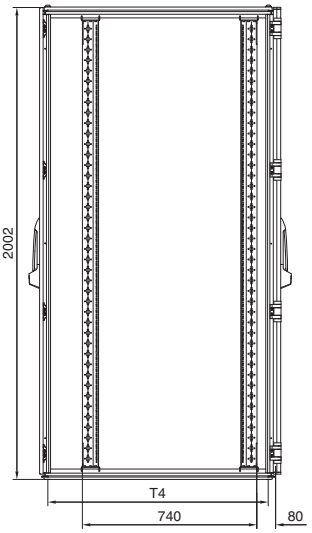

Rear view

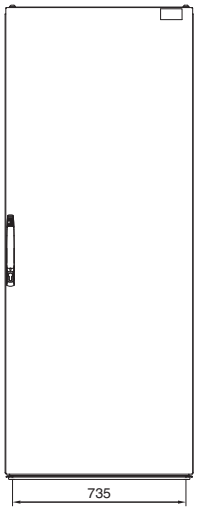

Top view

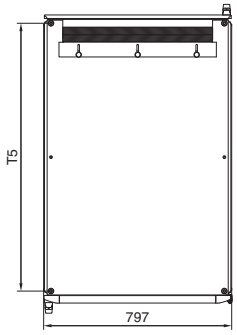

Section A – A

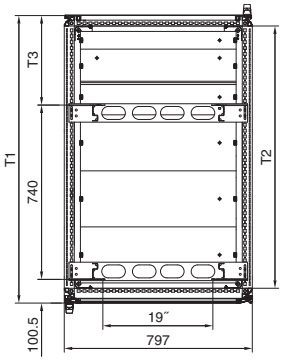

i.L. = Clearance width

Model No. DK	U (HE)	Depth dimensions mm				
		T1	T2	T3	T4	T5
7831.800	42	1021.5	912	161	935	935
7831.802	42	1221.5	1112	311	1135	1135
7831.803	42	1221.5	1112	311	1135	1135

Server enclosures TE 7000

Catalogue 33, page 117

Front view

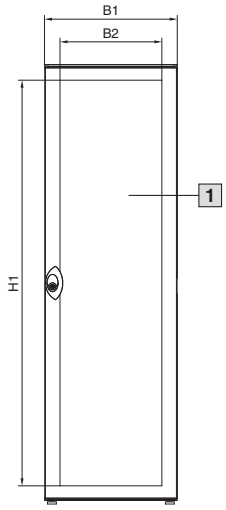

Side view

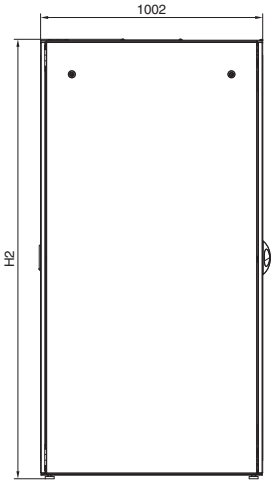

Front view without door

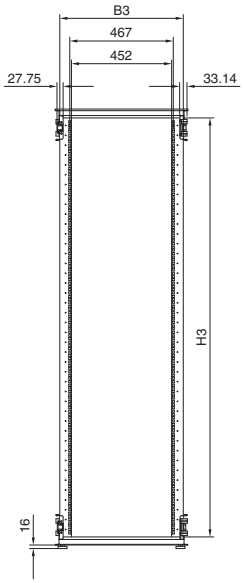

Side view without side panel

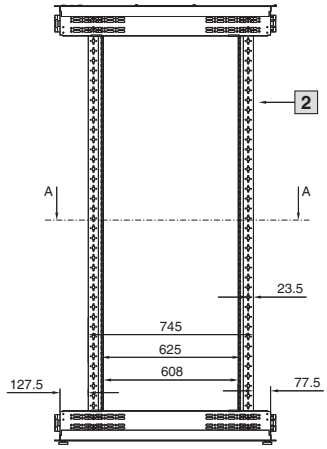

Top view

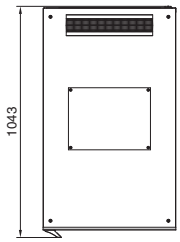

1 Perforated area
2 Front
3 Size of opening 240 x 340 mm

Top view without door

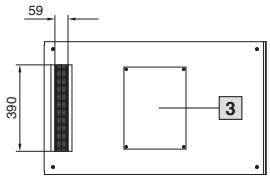

Section A – A

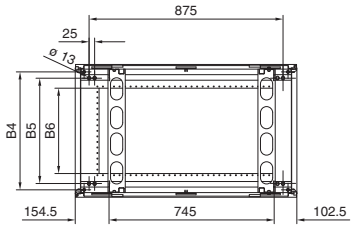

Model No. DK	U	Width dimensions mm						Height dimensions mm		
		B1	B2	B3	B4	B5	B6	H1	H2	H3
7000.875	21	599	459.6	557	532	475	385	1025	1182	1090
7000.882	42	599	459.6	557	532	475	385	1830	1982	1890
7000.885	42	599	459.6	557	532	475	385	1830	1982	1890
7000.892	42	799	661.7	757	732	675	585	1830	1982	1890
7000.895	42	799	661.7	757	732	675	585	1830	1982	1890

482.6 mm (19˝) system configuration

Installation dimensions

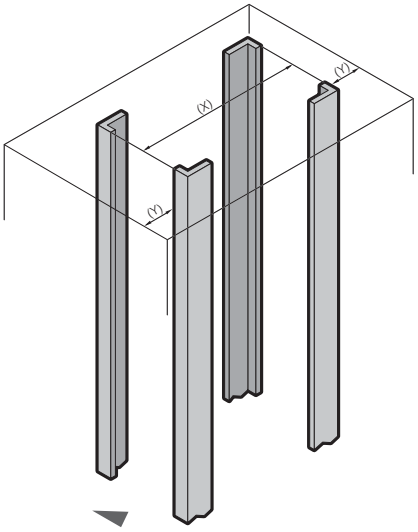

TS 8

Enclosure width mm	Enclosure depth mm	Max. distance between 482.6 mm (19˝) levels (X) mm	Min. clearance (Y)		Attachment
			front mm	rear mm	
600	600	512	42.5	42.5	on TS punched section with mounting flange, 17 x 73 mm, inner level
600	800	712	42.5	42.5	
600	900	812	42.5	42.5	
800	600	512	42.5	42.5	on depth stays as installation kit
800	800	712	42.5	42.5	
800	900	812	42.5	42.5	
800	1000	912	42.5	42.5	
800	800	674	61.5	61.5	on depth stays TS
800	600	474	61.5	61.5	
800	1000	874	61.5	61.5	
800	1200	1074	61.5	61.5	
600	900	851	23	23	on TS punched section with mounting flange, 17 x 73 mm, with slot
600	1000	951	23	23	
600	1200	1151	23	23	
600	600	468.5	64.2	64.2	Mounting frame
600	800	668.5	64.2	64.2	
600	900	768.5	64.2	64.2	
600	1000	868.5	64.2	64.2	
600	1200	1068.5	64.2	64.2	
800	600	468.5	64.2	64.2	
800	800	668.5	64.2	64.2	
800	1000	868.5	64.2	64.2	
800	1200	1068.5	64.2	64.2	

TE 7000

600	600	495	47	52	Mounting frame
600	800	695	47	52	
600	900	795	47	52	
600	1000	895	47	52	
800	600	495	47	52	
800	800	695	47	52	
800	900	795	47	52	
800	1000	895	47	52	

Quick selection for TS 8 accessories for mounting on the TE 7000

corresponds to			TS punched section with mounting flange 17 x 73 mm, for mounting installation components	C rails, for cable clamping in the enclosure depth via cable clamps	Cable clamp rail, for cable attachment via cable ties
Distance between levels (mm) TE 7000/TS 8 482.6 mm (19˝) mounting frame	Enclosure width/depth TS 8 (mm) mounting, outer level	Enclosure width/depth TS 8 (mm) mounting, inner level			
445	400		8612.140	7828.040	7858.160 depth-adjustable 445 – 695 mm
495		400	8612.040		
545	500		8612.150	7828.050	
595		500	8612.050		
645	600		8612.160	7828.060	7828.062
695		600	8612.060		7828.061
845	800		8612.180	7828.080	7828.082
895		800	8612.080		7828.081
945	900		–	7828.090	7828.092
995		900	8612.090		7828.091
1045	1000		8612.100	7828.100	7828.102
1095		1000	8612.000		7828.101

TE 7000/TS 8 482.6 mm (19˝) mounting frame

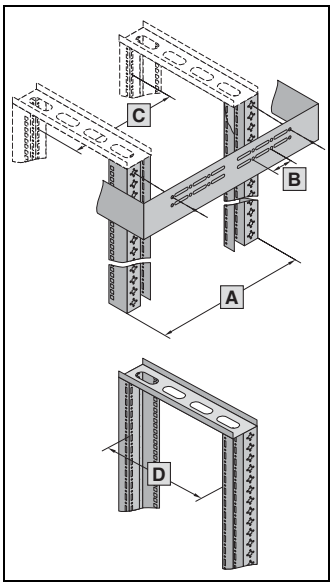

A Distance between the two 482.6 mm (19˝) levels
Supplied state of network enclosure: 495 mm
Supplied state of server rack: 745 mm

B The mounting distance in a rear mounting frame, horizontal, corresponds to the frame mounting dimensions of a 600 mm wide TS 8, inner level

C = **A** – 120 mm

D The mounting distance in a rear mounting frame, horizontal, corresponds to the frame mounting dimensions of a 600 mm wide TS 8 (inner level, 512 mm).

TS 8 frame

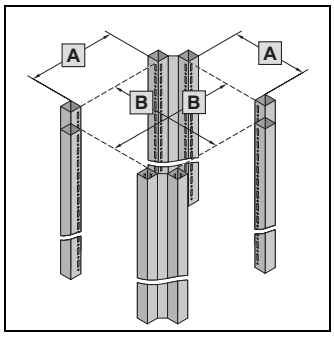

A Outer level

B Inner level

Load information for 482.6 mm (19˝) mounting angles

TS 8	800 mm wide			600 mm wide 4/6 punched sections with mtg. flanges[2]		Depth stays PS			600/800 mm wide with levelling feet
	Depth stays as installation kit[1]		Depth stays TS 7827.480/ 7827.490			DK 7696.000	DK 7698.000		
482.6 mm (19˝) levels	4	6		Castors	Levelling feet	600 mm	800 mm Installation at the centre/side		with mounting frame 7856.7XX
1[1]	1500 N	1750 N	2000 N	2000 N	4000/5000 N	1500 N	800 N	800 N	5000 N
2	3000 N	3500 N	4000 N	2000 N[3]	8000/10000 N	3000 N	1600 N	1600 N	10000 N

TE 7000	800 mm wide	600 mm wide	TE 7000 server rack
482.6 mm (19˝) levels	2	2	2
1[1]	2000 N	2000 N	3500 N
2	4000 N	4000 N	7000 N

[1] **Theoretical value,** because in the case of one attachment level the torsion of the mounting angles depends on the centre of gravity of the installed device.
[2] No significant increase in load can be achieved through the use of additional depth stays.
The general load data of 50 N/U per attachment level is not met by all enclosures shown here!
[3] 7500 N with transport kit DK 7825.900

Consoles TP

Consoles

Catalogue 33, page 123

600/800 mm width
TP 6720.500, TP 6721.500

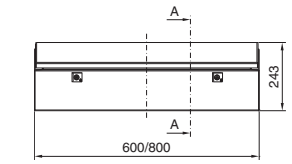

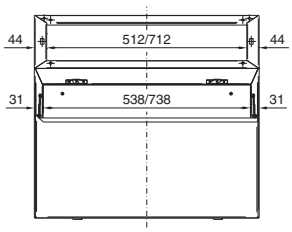

1200/1600 mm width
TP 6722.500, TP 6723.500

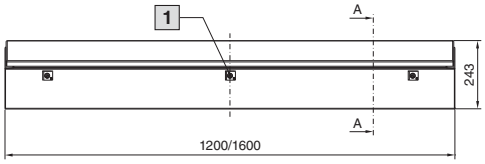

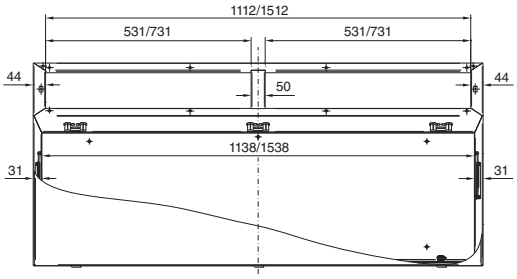

Section A – A

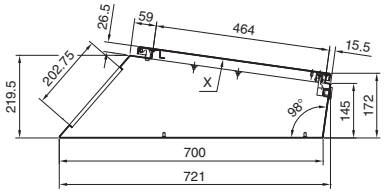

1 Applies to 1,600 mm width only

**View X,
see page 57.**

Consoles with enlarged installation depth

Catalogue 33, page 123

TP 6720.200, TP 6721.200, TP 6722.200, TP 6723.200

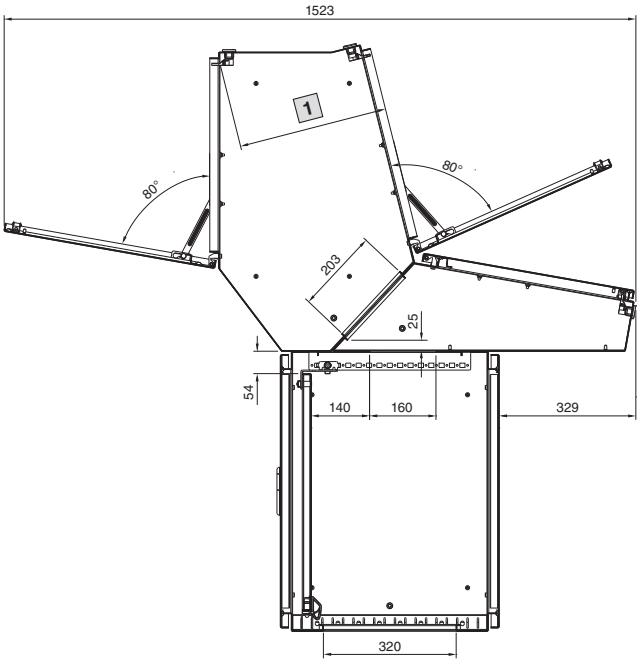

Deep console TP
used in conjunction with TP desk unit and pedestal
D = 500 mm

1 Max. installation depth 369 mm

TP 6720.100, TP 6721.100, TP 6722.100, TP 6723.100

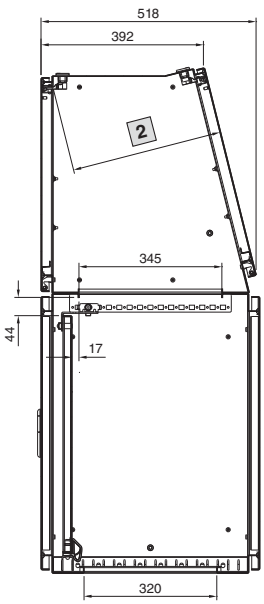

Deep console TP
when mounting directly on pedestal
D = 500 mm

2 Max. installation depth 368 mm

Desk units, prepared for consoles

Catalogue 33, page 123 – 126

600/800 mm width
TP 6714.500, TP 6715.500

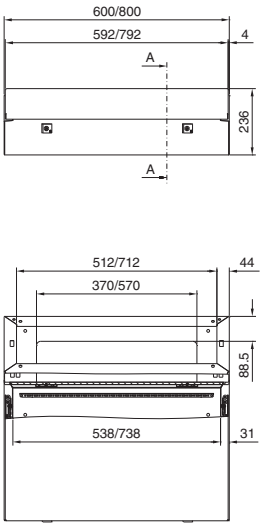

1200/1600 mm width
TP 6716.500, TP 6717.500

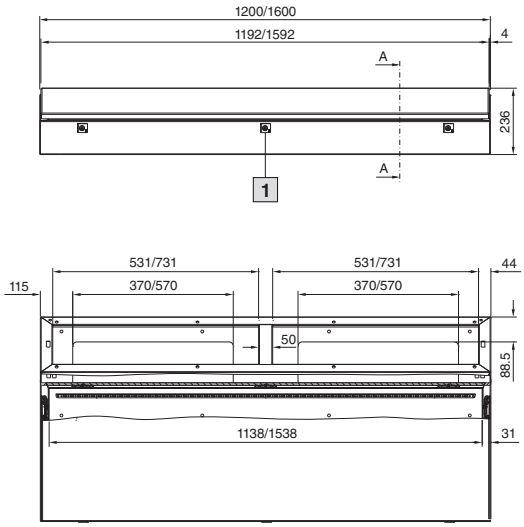

Section A – A

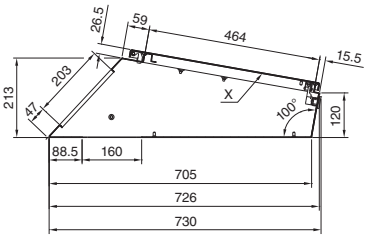

1 Applies to 1,600 mm width only

View X,
see below.

Desk units, rear with hinged lid

Catalogue 33, page 123 – 126

600/800 mm width
TP 6710.500, TP 6711.500

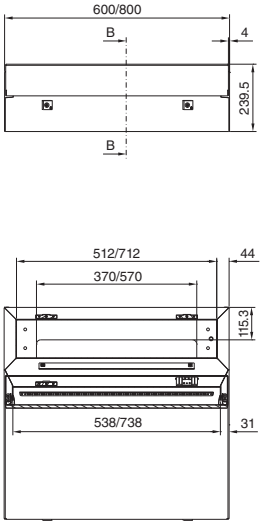

1200/1600 mm width
TP 6712.500, TP 6713.500

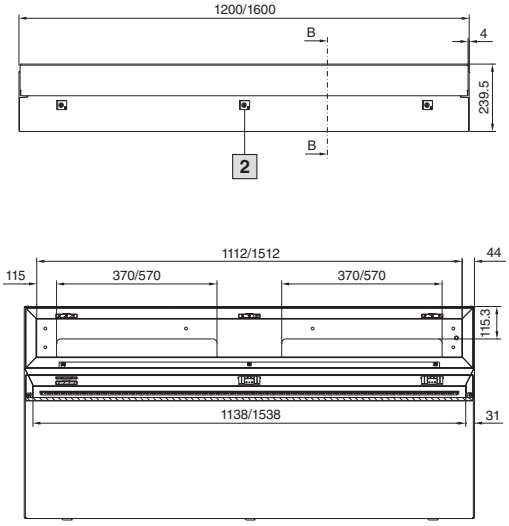

Section A – A

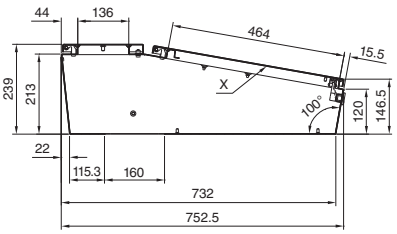

Detail X

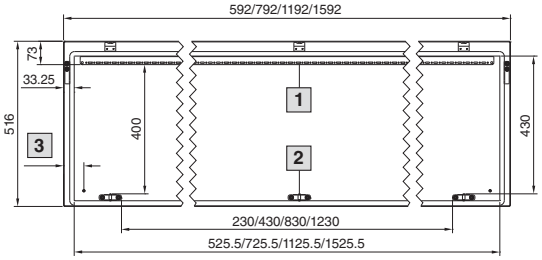

1 Does not apply to width 600/800 mm

2 Applies to 1,600 mm width only

3 Width = 600/800/1200 = 63.5 mm
Width = 1600/163.5 mm

Consoles TP

Pedestals, 400 mm deep

Catalogue 33, page 123 – 126

600/800 mm width
TP 6700.500, TP 6701.500

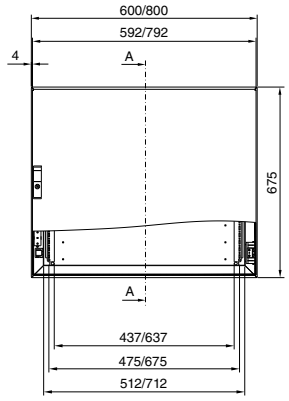

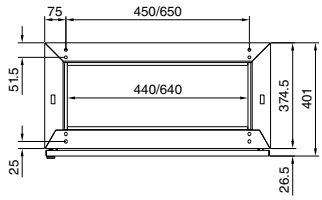

1200/1600 mm width
TP 6702.500, TP 6703.500

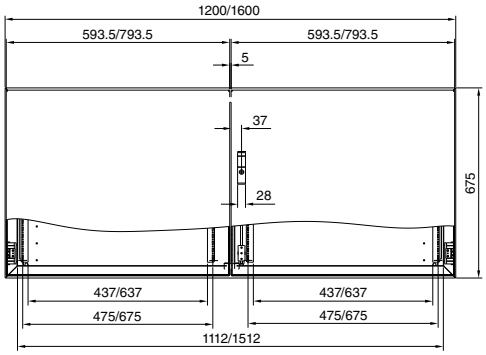

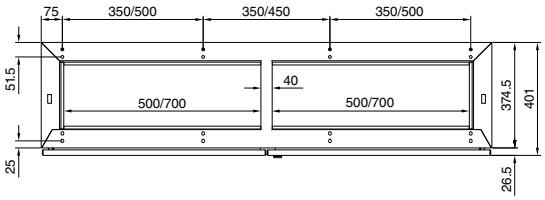

Section A – A

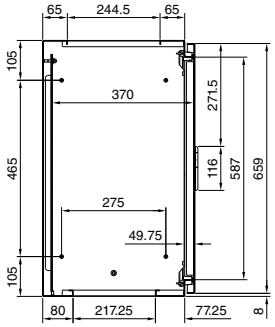

Mounting cut-out

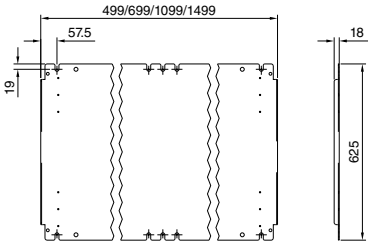

Pedestals, 500 mm deep

Catalogue 33, page 123 – 126

600/800 mm width
TP 6704.500, TP 6705.500

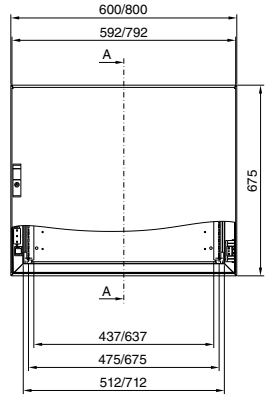

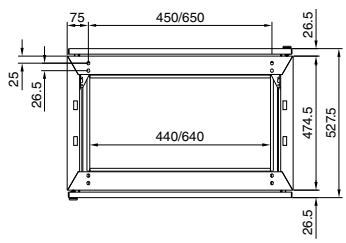

1200/1600 mm width
TP 6706.500, TP 6707.500

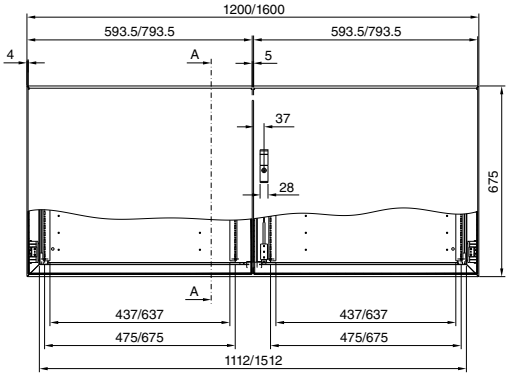

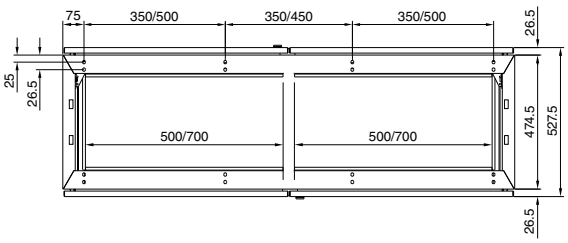

Section A – A

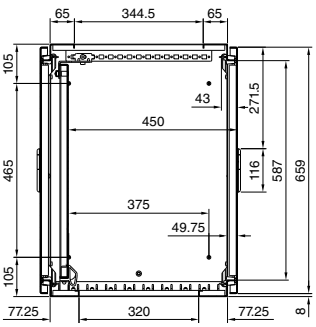

Mounting plate

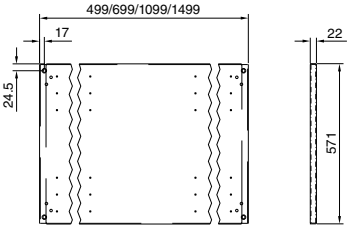

Note:
Dimensions of mounting cut-out – see depth 400 mm.

Universal consoles TP

Sheet steel Catalogue 33, page 129

With short front door
TP 2694.500

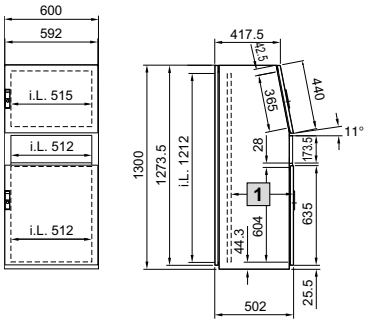

With tall front door
TP 2695.500

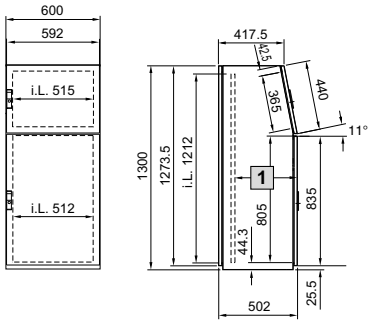

Mounting plate

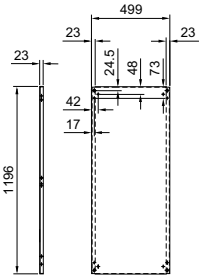

1 Adjustable from 200 to 400 mm on a 25 mm pitch pattern

i.L. = Clearance width

One-piece console TP

Catalogue 33, page 128

600/800 mm width
TP 6746.500, TP 6748.500

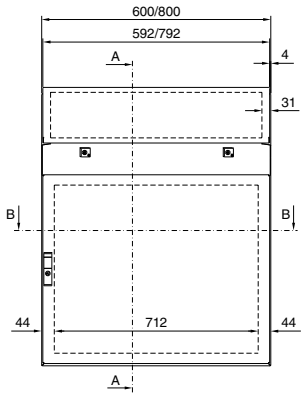

1000/1200 mm width
TP 6740.500, TP 6742.500

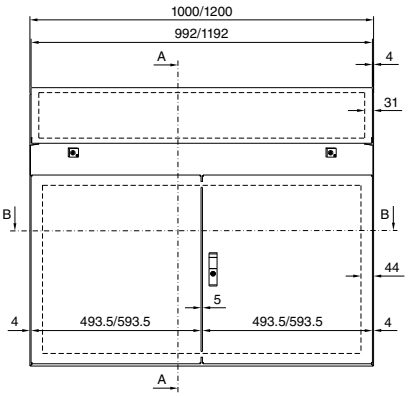

Section A – A

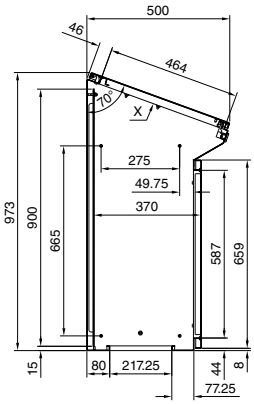

Section B – B

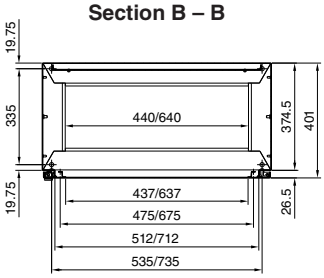

Section B – B

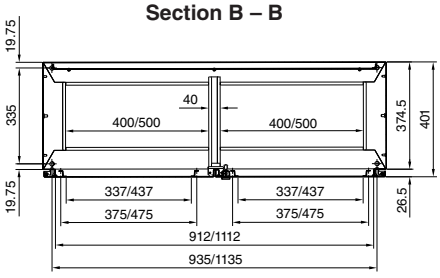

Mounting plate

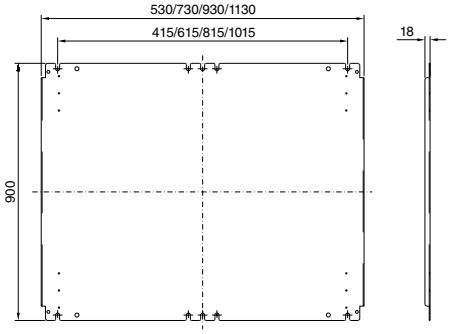

View in X direction

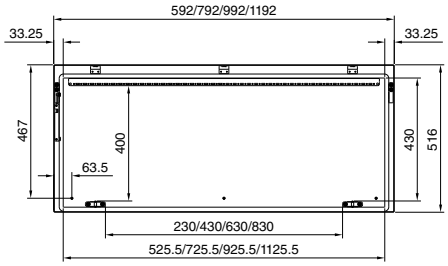

PC enclosure systems

Based on TS 8

With keyboard drawer Catalogue 33, page 130

With drawer
PC 8366.000, PC 8368.000

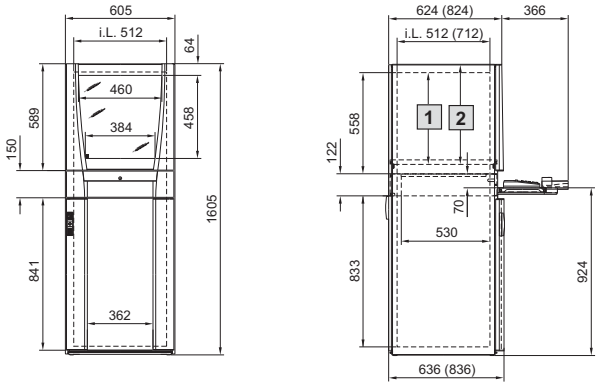

With mounting compartment, small and drawer
PC 8366.300

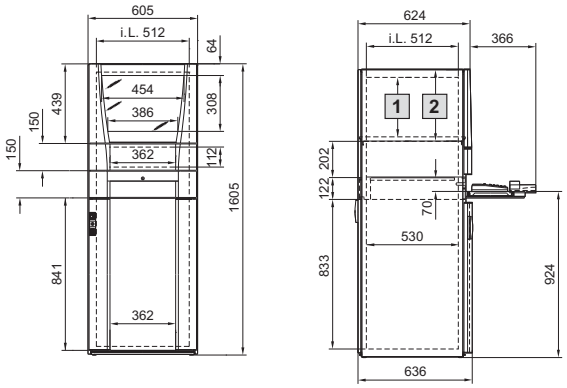

1 Max. 505, adjustable on a 25 mm pitch pattern
2 Max. 549, adjustable on a 25 mm pitch pattern

1 Max. 355, adjustable on a 25 mm pitch pattern
2 Max. 397, adjustable on a 25 mm pitch pattern

With mounting compartment, large and drawer
PC 8366.400

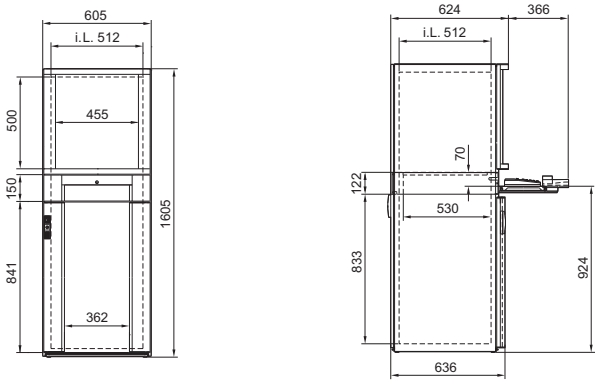

i.L. = Clearance width

				Model No. PC		
			Depth 636 mm	**8366.000**	**8366.300**	**8366.400**
			Depth 836 mm	**8368.000**	**–**	**–**
Supply includes	**Design**	**Material**	**Colour RAL**			
Enclosure	Frame construction with side panels and roof secured from the inside	Sheet steel 1.5 mm	7035 textured	■	■	■
	Gland plates, three-part	Sheet steel 1.5 mm	Zinc-plated			
Rear door	With locking rod and double-bit insert, hinged on the r/h side	Sheet steel 2.0 mm	7035 textured	■	■	■
Glazed door, top	With support frame latched from the inside[1], r/h hinge	Sheet steel 1.5 mm	7015	■	■	
	Vertical decorative trim panels	Plastic to UL 94-V0	7035			
	Pane with screen-printed mask	Toughened safety glass 4.0 mm	7015			
Mounting compartment, large, top	Vertical bars, latched from the inside[1], hinged on r/h side	Aluminium section	7035			■
	Installation plate	Sheet steel 1.5 mm	7015			
	Trim strip top/bottom	Plastic to UL 94-V0	7035			
Component shelf for monitor	Slotted, permanently installed	Sheet steel 1.5 mm	7015	■	■	
Drawer for keyboard	Enclosure	Sheet steel 1.5 mm	7035	■	■	■
	Keyboard extension piece with cable support, pull-out mousepad and keyboard cradle	Sheet steel 1.5 mm	7035			
	Trim panel with handle strip, folded as handrest, with lock no. 3524 E	Plastic to UL 94-V0	7035/7015/9006			
Mounting compartment, small	R/h hinge, screw-fastened from the inside on the left, folded mounting plate	Sheet steel 1.5 mm	7015		■	
	Decorative side trim panels	Plastic to UL 94-V0	7035			
Bottom door	Vertical bars with locking rod and double-bit insert, hinged on r/h side	Aluminium section	7035	■	■	■
	Door or installation plate folded	Sheet steel 1.5 mm	7015			

[1] With unlatching for top glazed door

Based on TS 8

With folding keyboard or desk section Catalogue 33, page 130

With fold-out tray
PC 8366.100, PC 8368.100

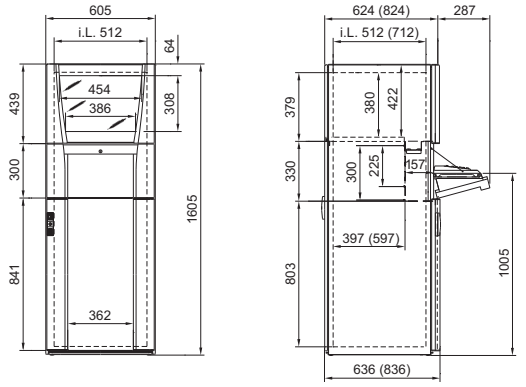

With desk section
PC 8366.200

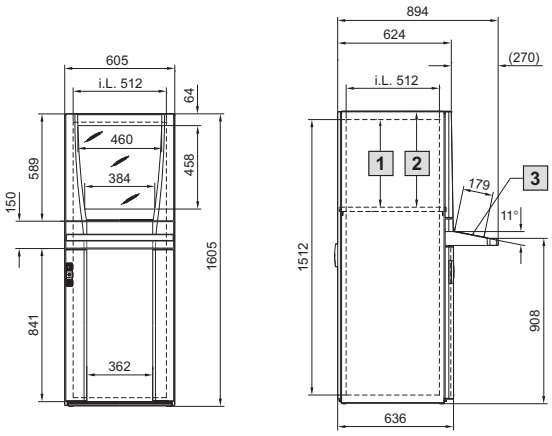

1 Max. 505, adjustable on a 25 mm pitch pattern

2 Max. 549, adjustable on a 25 mm pitch pattern

3 Max. installation surface 540 x 179 mm

i.L. = Clearance width

				Model No. PC	
			Depth 636 mm	**8366.100**	**8366.200**
			Depth 836 mm	**8368.100**	**–**
Supply includes	**Design**	**Material**	**Colour RAL**		
Enclosure	Frame construction with side panels and roof secured from the inside	Sheet steel 1.5 mm	7035 textured	■	■
	Gland plates, three-part	Sheet steel 1.5 mm	Zinc-plated		
Rear door	With locking rod and double-bit insert, hinged on the r/h side	Sheet steel 2.0 mm	7035 textured	■	■
Glazed door, top	With support frame latched from the inside[1], r/h hinge	Sheet steel 1.5 mm	7015	■	■
	Vertical decorative trim panels	Plastic to UL 94-V0	7035		
	Pane with screen-printed mask	Toughened safety glass 4.0 mm	7015		
Component shelf for monitor	Slotted, permanently installed	Sheet steel 1.5 mm	7015	■	■
Fold-out tray for keyboard	Enclosure with mouse support and cut-out in the rear panel, width 482.6 mm (19″) x height 4 U, for rear attachment	Sheet steel 1.5 mm	7035	■	
	Trim panel hinged at the bottom, with 2 retaining cords, with lock no. 3524 E	Plastic to UL 94-V0	7035/7015/9006		
	Keyboard support with mousepad extension piece and 2 nylon tapes for keyboard	Sheet steel 1.5 mm	7035		
Desk section	Enclosure with removable cover top and bottom	Sheet steel 1.5 mm/2.0 mm	7035		■
	Trim strip, top and handle strip	Plastic to UL 94-V0	7035/7015/9006		
Bottom door	Vertical bars with locking rod and double-bit insert, hinged on r/h side	Aluminium section	7035	■	■
	Door or installation plate folded	Sheet steel 1.5 mm	7015		

[1] With unlatching for top glazed door

Industrial Workstations

Enclosures

Catalogue 33, page 132

		Model No. IW	W/D mm 600/600	6900.000	6900.100	6900.400	6900.410	6901.100
			H mm	900	900	900	900	1000
Supply includes	**Design**	**Material**	**Colour RAL**					
Enclosure	Frame structure w. side panels, screw-fastened from inside	Sheet steel, 1.5 mm	7035 textured	■	■	■	■	■
	Base with gland plate for cable entry							
	Levelling feet to compensate for floor irregularities							
Trim panel, top	To finish off the enclosure at the top	Plastic to UL 94-V0	7035/ 7015	–	–	–	–	■
Keyboard drawer	Drawer housing	Sheet steel, 1.5 mm	7035	–	–	–	–	■
	Extension piece with cable support, pull-out mousepad and keyboard cradle							
	Trim panel with recessed handle, folded as handrest, with lock no. 3524 E	Plastic to UL 94-V0	7035/ 7015/ 9006					
Drawer section	Drawer tray, fitted with drawer trim panel and telescopic slides	Sheet steel, 1.5 mm	7035	–	–	■	–	–
	Extension piece with cable support and pull-out mousepad	Sheet steel, 1.5 mm	7035	–	–	–	■	–
	Drawer trim panel with recessed handle, with lock no. 3524 E	Plastic to UL 94-V0	7035/ 7015/ 9006	–	–	■	■	–
Designer door	Vertical bars with locking rod and double-bit insert, hinged on r/h side	Aluminium section	7035	■	■	■	■	■
	Door or installation plate, folded, solid	Sheet steel, 1.5 mm	7015	■	■	■	■	■
Worktop	Solid	Chipboard, plastic-laminated on both sides, with edge strip	Similar to 7035 Edge strip: similar to 7015	–	–	–	–	■
Rear panel	Screw-fastened from the inside	Sheet steel, 1.5 mm	7035 textured	■	–	–	–	–
Rear door	With locking rod and double-bit insert, hinged on the r/h side	Sheet steel, 1.5 mm	7035 textured	–	■	■	■	■

Enclosures

Catalogue 33, page 133

Enclosure
IW 6900.000, IW 6900.100

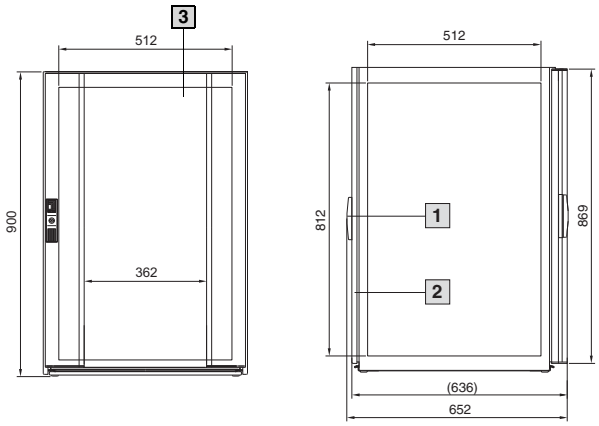

1 Rear door for IW 6900.100
2 Rear panel for IW 6900.000, dimensions in brackets
3 Designer door for IW 6900.000, IW 6900.100

Enclosure
IW 6900.400, IW 6900.410

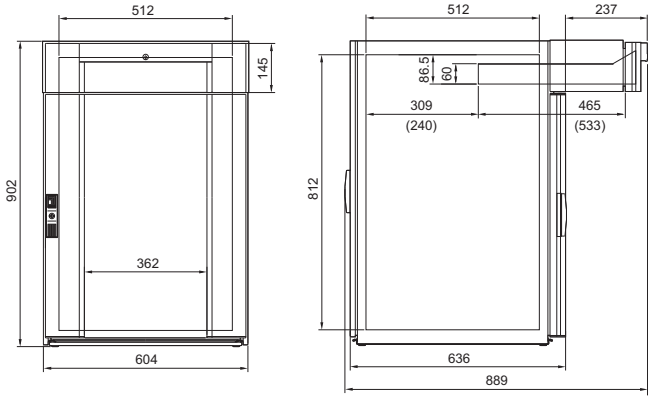

Dimensions in brackets for IW 6900.410.

Enclosure
IW 6901.100

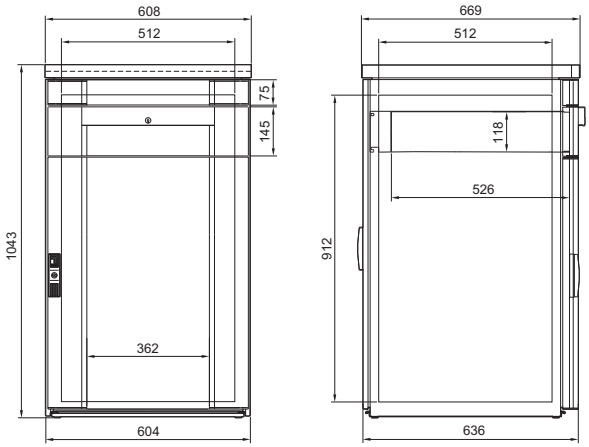

Monitor housing
IW 6902.500

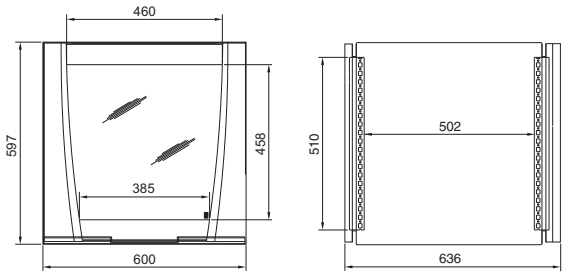

Industrial Workstations

Worktops

Catalogue 33, page 133

Worktop, small
IW 6902.300

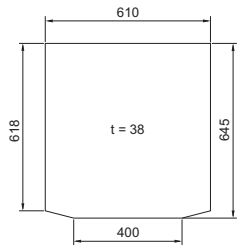

Worktop
IW 6902.100

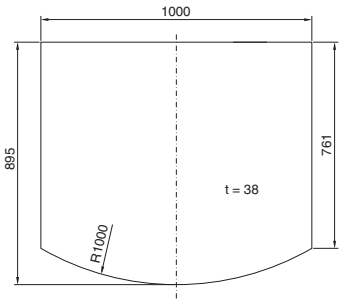

Worktop, prepared for pedestal
IW 6902.310

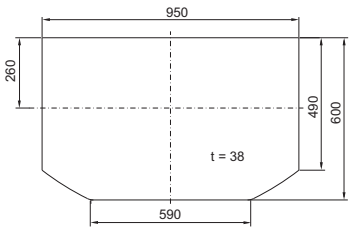

Roof
IW 6902.400

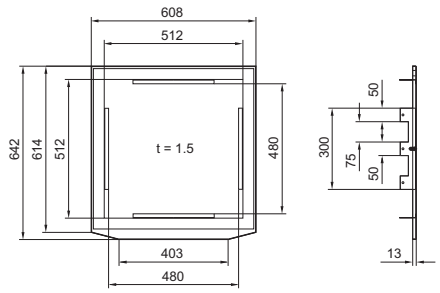

Comfort Panel

Standard range Catalogue 33, page 138 (Other installation depths can be selected using the operating housing configurator at www.rittal.com)

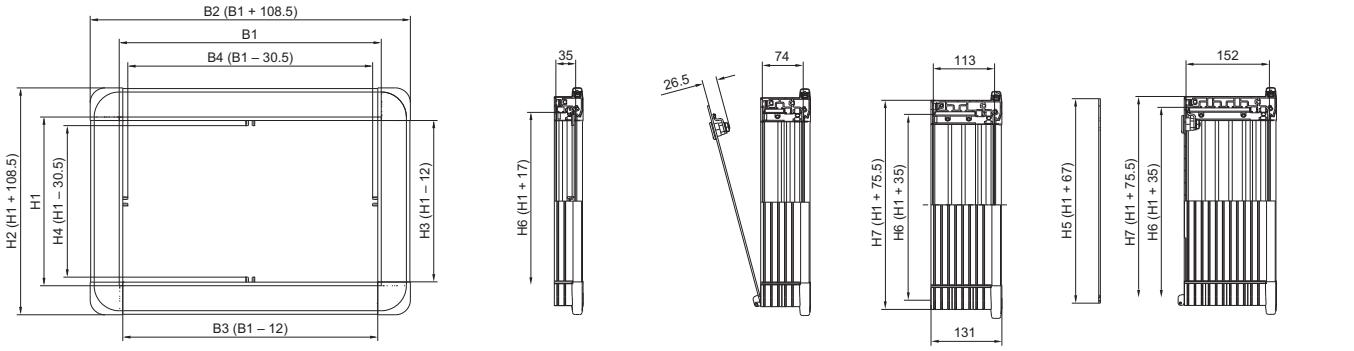

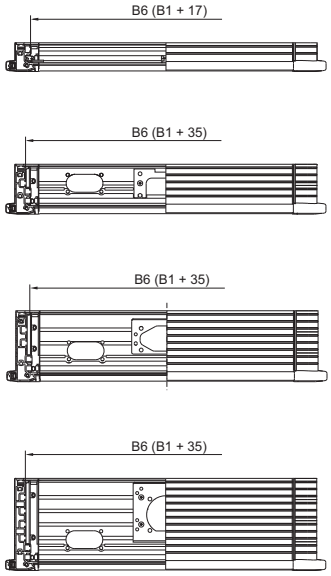

Installation depth 74 mm

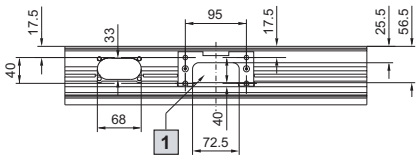

Installation depth 113 mm

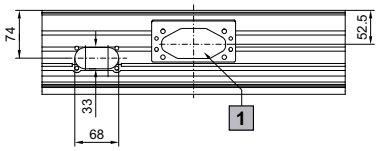

Installation depth 152 mm

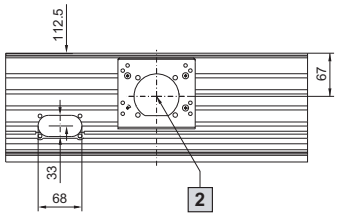

1 Support arm connection CP-L, square ▭ 120 x 65 mm

2 Support arm connection CP-L, Ø 130 mm

Model No. CP	6372.541	6372.542	6372.543	6372.551	6372.552	6372.553	6372.561	6372.562	6372.563
Support arm connection CP-L	▭ 120 x 65 mm	Ø 130 mm	Ø 130 mm	▭ 120 x 65 mm	Ø 130 mm	Ø 130 mm	▭ 120 x 65 mm	Ø 130 mm	Ø 130 mm
B1 = Width of the front panel	520	520	520	520	520	520	520	520	520
H1 = Height of the front panel	400	400	400	500	500	500	600	600	600
Max. installation depth	74	152	191	74	152	191	74	152	191
Overall depth	92	170	209	92	170	209	92	170	209
B2 = Overall width	628.5	628.5	628.5	628.5	628.5	628.5	628.5	628.5	628.5
B3 = Clearance width between enclosure sections	508	508	508	508	508	508	508	508	508
B4 = Clearance width between the retaining claws of the mounting kit	489.5	489.5	489.5	489.5	489.5	489.5	489.5	489.5	489.5
B5 = Width of the rear panel	587.5	587.5	587.5	587.5	587.5	587.5	587.5	587.5	587.5
B6 = Clearance width for assembly	555	555	555	555	555	555	555	555	555
B7 = Enclosure width	595.5	595.5	595.5	595.5	595.5	595.5	595.5	595.5	595.5
H2 = Overall height	508.5	508.5	508.5	608.5	608.5	608.5	708.5	708.5	708.5
H3 = Clearance height between enclosure sections	388	388	388	488	488	488	588	588	588
H4 = Clearance height between the retaining claws of the mounting kit	369.5	369.5	369.5	469.5	469.5	469.5	569.5	569.5	569.5
H5 = Height of rear panel	467.5	467.5	467.5	567.5	567.5	567.5	667.5	667.5	667.5
H6 = Clearance height for assembly	435	435	435	535	535	535	635	635	635
H7= Enclosure height	475.5	475.5	475.5	575.5	575.5	575.5	675.5	675.5	675.5

Comfort Panel

Comfort Panel

Standard range Catalogue 33, page 138
(Other installation depths can be selected using the operating housing configurator at www.rittal.com)

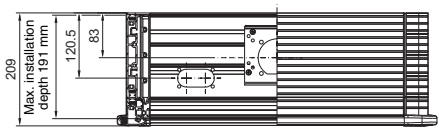

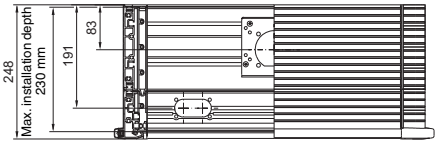

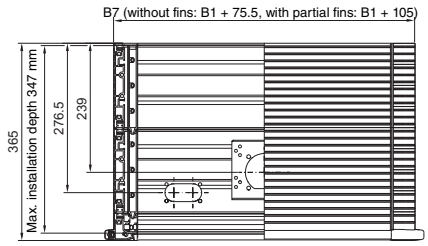

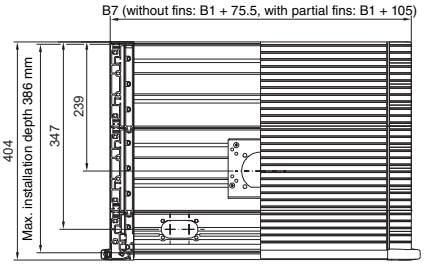

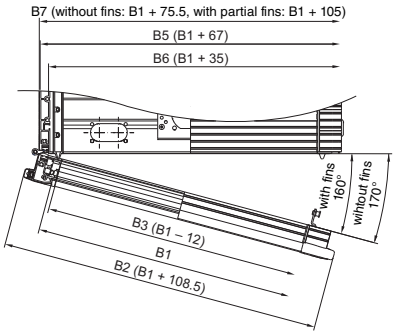

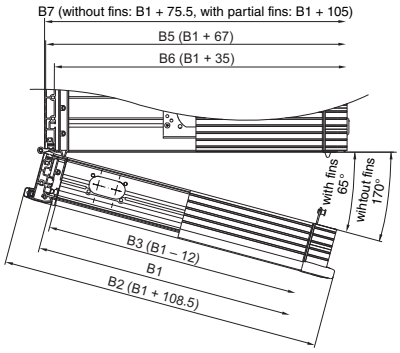

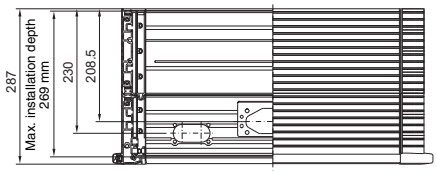

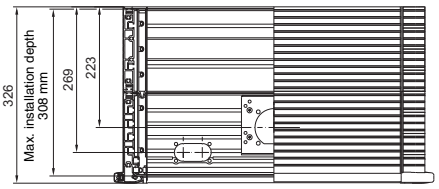

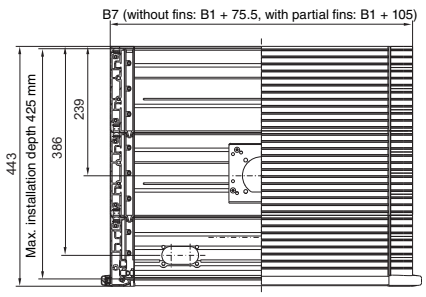

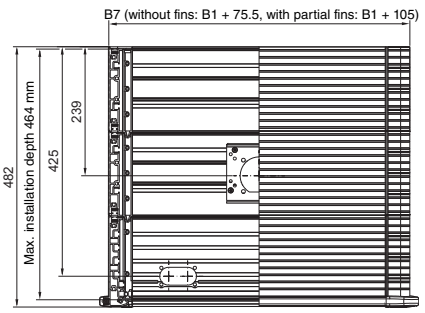

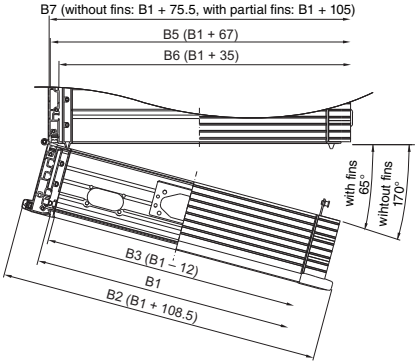

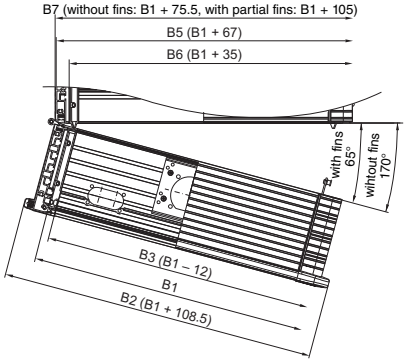

Calculating the swivel mounting space

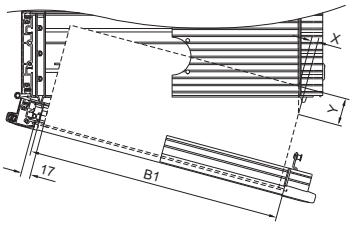

Front panel width (B1) mm	Installation depth mm			
	191, 230, 269, 308		347, 386, 425, 464	
	X	Y	X	Y
300	26	71	187	226
350	21	65	141	221
400	17	59	116	215
450	14	54	99	209
482.6	12	51	91	206
500	12	49	87	204
550	10	45	77	201
600	9	40	70	196
650	7	36	63	193
700	6	32	58	183

Note:
Other installation depths can be selected using the operating housing configurator.

Comfort Panel

Front design Catalogue 33, page 138 (Can be selected using the operating housing configurator at www.rittal.com)

Spacing and built-in trim panel

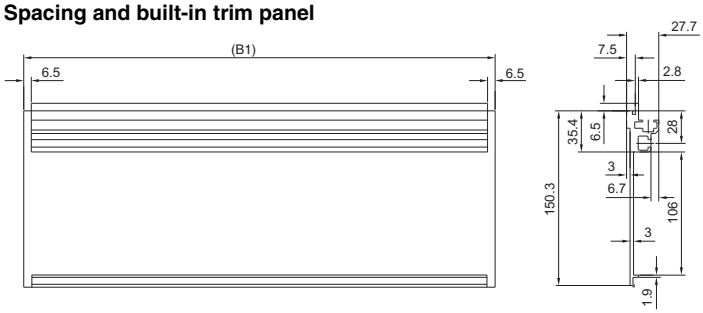

Cross member

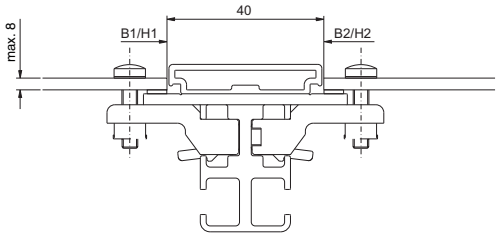

Comfort Panel

Design strip (Can be selected using the operating housing configurator at www.rittal.com)

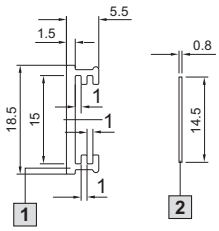

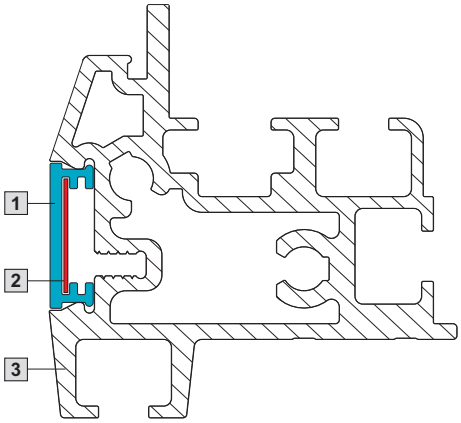

1 Design strip
2 Identification strips, max. 0.8 mm
3 Enclosure section

Dimensions of identification strips:
Front panel width/height – 16 mm

Comfort Panel

Keyboard housing (Can be selected using the operating housing configurator at www.rittal.com)

External mounting situation Keyboard housing 35 mm

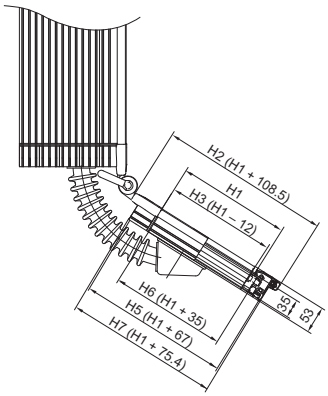

External mounting situation Keyboard housing 74 mm

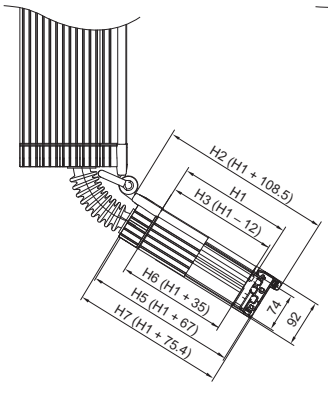

External mounting situation Keyboard housing 113 mm

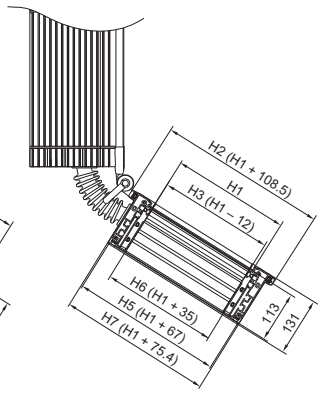

External mounting situation Support for keyboards

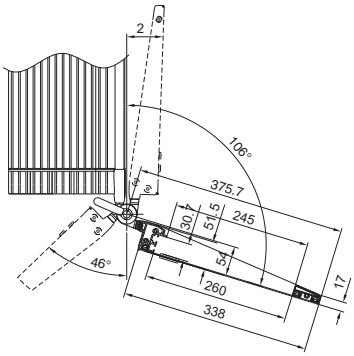

Comfort Panel

Comfort Panel

Rear panel (Can be selected using the operating housing configurator at www.rittal.com)

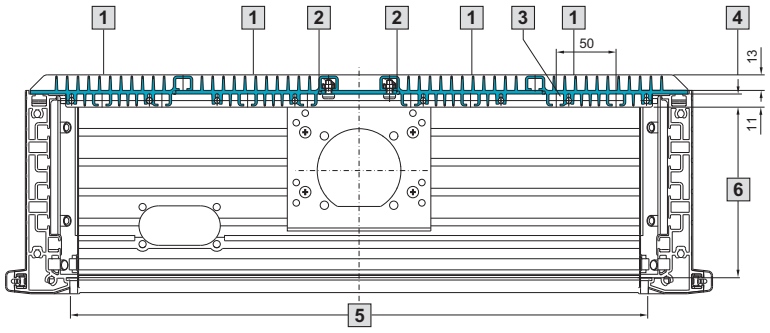

Recommendation:
The minimum front panel width for the installation of at least 2 heat sink sections is 240 mm and should not be undercut, if possible.

1 Rear cooling panel section, unless otherwise specified the cooling fins are arranged vertically.

2 Width compensating trim panel, fitted in the centre with an even number of heat sinks, or on the right with an uneven number.
This position may be modified individually by rotating the entire rear panel through 180°.

3 Spring nut M5, CP 6108.000 for interior installation on screw channels.

4 The total depth of the enclosure is increased by 13 mm.

5 Front panel width for determining the cooling modules and compensating panel.

6 Installation depth is reduced by 11 mm.

Comfort Panel

Load specifications for installed equipment

One-piece enclosure/screw-fastened
Installation depths:
A1, A2, A3, B1, B2, B3, B4, B5, B6, B7, B8
F1 = 500 N
F1 = F3

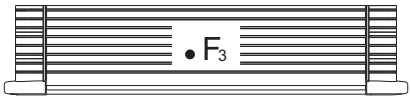

Keyboard housing

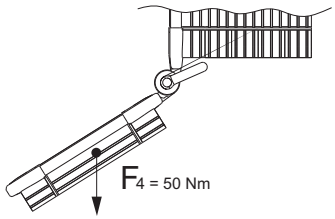

Multi-piece enclosure/hinged
Installation depths:
C1, C2, C3, C4, C5, C6, C7, C8
F2 = 150 N
F2 = 100 N when mounting keyboard housing
F3 = 350 N
F1 = 500 N

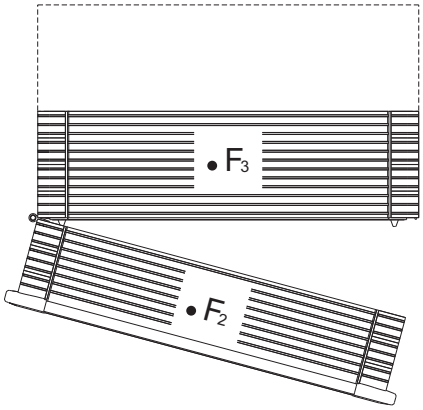

Key:
F1 = Overall installed weight (N)
F2 = Permissible installed weight, hinged part (N)
F3 = Permissible installed weight of enclosure frame with support arm connection (N)
F4 = Permissible installed weight of keyboard housing (N)

Comfort Panel

Minimum front panel width (B1)

Depending on:
- Installation depth of the operating housing
- With or without keyboard housing
- Position of the support arm connection

Design		Installation depths of operating housings mm				
Keyboard housing (Can be selected using the operating housing configurator)	Support arm and pedestal connection (Can be selected using the operating housing configurator)	74	113	152	191, 308, 347, 269	230, 386, 464, 425
0 = without keyboard housing	0 to 6 top or bottom	150				
with 1, 2 or 5	0, 1 or 4	200				
	with 2, 3, 5 or 6	335				200
with 2A or 5A	2 or 5	335				200
	0, 1 or 4	200				
0 = without keyboard housing	4A, 5A, 6A	–		250	250[1)]	250
with 1, 2 or 5	4A	–		440	440[1)]	440
0, 1, 2, 5	4B, 5B, 6B	–		460	460[1)]	460
with 3	0 to 6 top or bottom	335				
with 4		385				

[1)] For enclosure depth 269 mm only possible as a special order.
If these values are not met, each individual requirement can be examined, and often a special solution can be found (such as an off-centre support arm connection)!

Optipanel

Standard range, support arm connection CP-L, ▭ 120 x 65 mm Catalogue 33, page 140

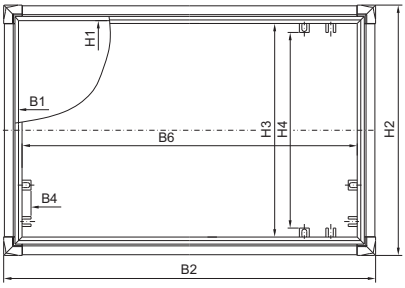

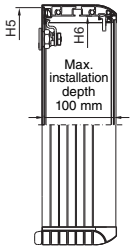

Support arm connection CP-L, ▭ 120 x 65 mm
for CP 6380.000, CP 6380.020, CP 6380.040,
CP 6380.400, CP 6380.500, CP 6380.600

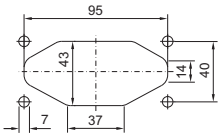

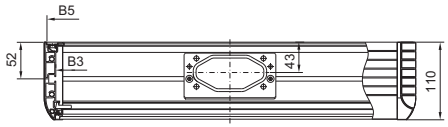

Model No. CP	Standard range					
	6380.020	**6380.000**	**6380.040**	**6380.400**	**6380.500**	**6380.600**
Support arm connection CP-L	▭ 120 x 65 mm	▭ 120 x 65 mm	▭ 120 x 65 mm	▭ 120 x 65 mm	▭ 120 x 65 mm	▭ 120 x 65 mm
B1 = Width of the front panel	430	482.6	482.6	520	520	520
H1 = Height of the front panel	343	310.3	354.8	400	500	600
Max. installation depth	100	100	100	100	100	100
Overall depth	110	110	110	110	110	110
B2 = Overall width	474	526.6	526.6	564	564	564
B3 = Clearance width between enclosure sections	441	493.6	493.6	531	531	531
B4 = Clearance width between the retaining claws of the mounting kit	397	449.6	449.6	487	487	487
B5 = Width of the rear panel	466	518.6	518.6	556	556	556
B6 = Clearance width for assembly	422	474.6	474.6	512	512	512
H2 = Overall height	387	354.3	398.8	444	544	644
H3 = Clearance height for assembly	335	302.3	346.8	392	492	592
H4 = Clearance height between the retaining claws of the mounting kit	310	277.3	321.8	367	467	567
H5 = Height of rear panel	379	346.3	390.8	436	536	636
H6 = Clearance height between enclosure sections	354	321.3	365.8	411	511	611

Optipanel

Optipanel

Standard range and for desktop TFT up to 20.1˝ Catalogue 33, page 140

For desktop TFT

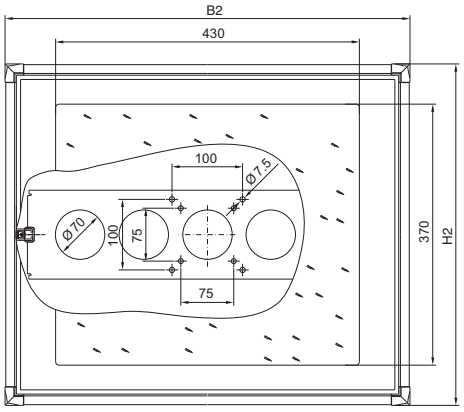

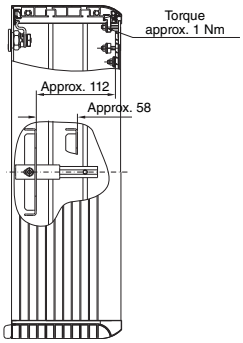

Standard range

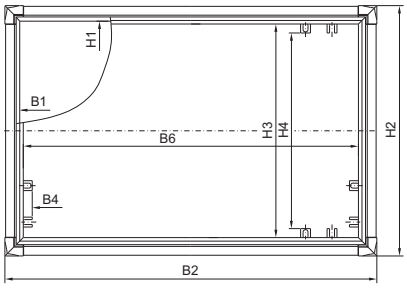

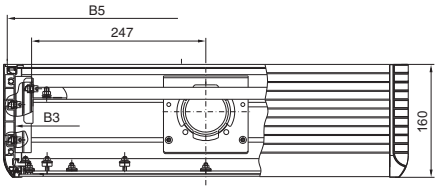

Support arm connection CP-L, Ø 130 mm
for CP 6380.410, CP 6380.510,
CP 6380.610, CP 6380.050

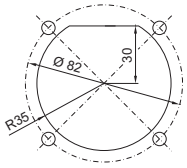

Model No. CP	Standard range			For desktop TFT
	6380.410	**6380.510**	**6380.610**	**6380.050**
Support arm connection CP-L	Ø 130 mm	Ø 130 mm	Ø 130 mm	Ø 130 mm
B1 = Width of the front panel	520	520	520	530
H1 = Height of the front panel	400	500	600	440.4
Max. installation depth	150	150	150	150
Overall depth	160	160	160	160
B2 = Overall width	564	564	564	574
B3 = Clearance width between enclosure sections	531	531	531	541
B4 = Clearance width between the retaining claws of the mounting kit	487	487	487	497
B5 = Width of the rear panel	556	556	556	566
B6 = Clearance width for assembly	512	512	512	522
H2 = Overall height	444	544	644	484.5
H3 = Clearance height for assembly	392	492	592	432.4
H4 = Clearance height between the retaining claws of the mounting kit	367	467	567	407.4
H5 = Height of rear panel	436	536	636	476.4
H6 = Clearance height between enclosure sections	411	511	611	451.4

Optipanel

Installation depth (Can be selected using the operating housing configurator at www.rittal.com)

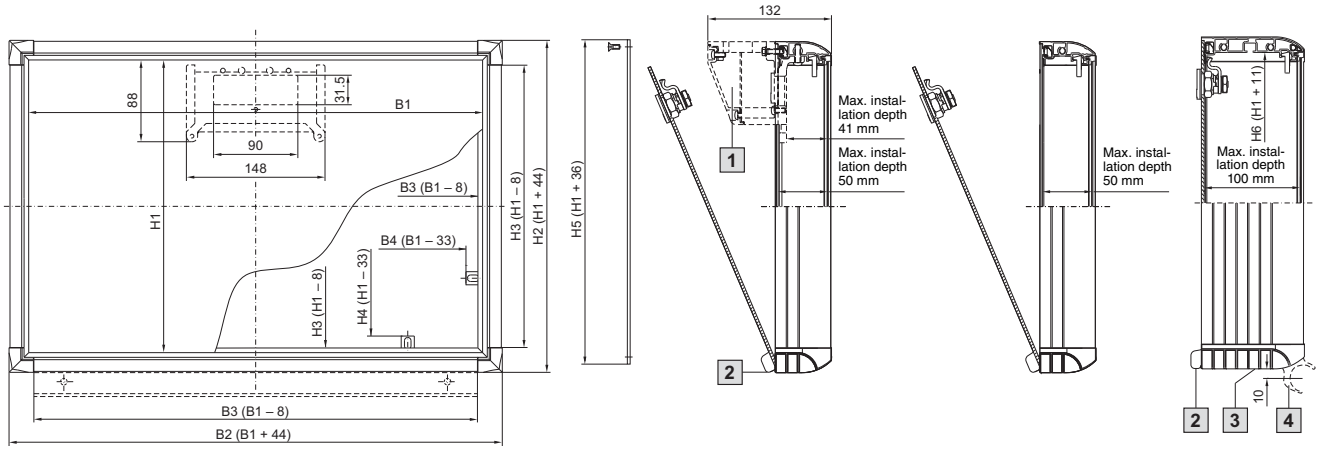

50 mm

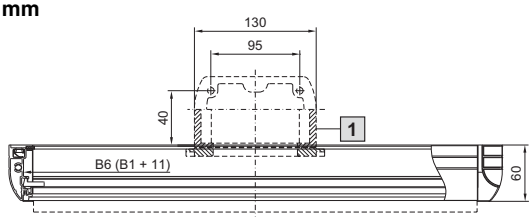

100 mm

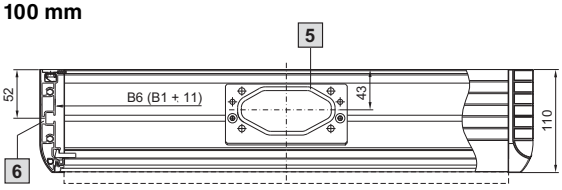

150 mm

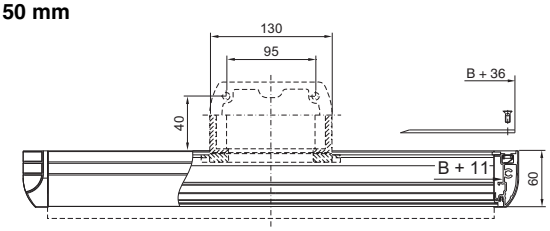

1 When preparing for rear support arm connection CP-L, ▭ 120 x 65 mm
2 Hinge
3 Cable tube
4 When preparing for keyboard housings
5 Prepared for support arm connection CP-L, ▭ 120 x 65 mm
6 Channels for inserting the spring nut M5
7 Prepared for CP-L, Ø 130 mm

Width dimensions:

B1 = Width of the front panel
B2 = Overall width
B3 = Clearance width between enclosure sections
B4 = Clearance width between the retaining claws of the mounting kit
B5 = Width of rear panel (B1 + 36)
B6 = Clearance width for assembly

Height dimensions:

H1 = Height of the front panel
H2 = Overall height
H3 = Clearance height between enclosure sections
H4 = Clearance height between the retaining claws of the mounting kit
H5 = Height of rear panel
H6 = Clearance height for assembly

Optipanel

Front design Catalogue 33, page 140 (Can be selected using the operating housing configurator at www.rittal.com)

Front panel screw-fastened from the inside

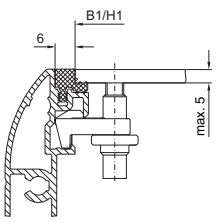

Front panel screw-fastened from the outside

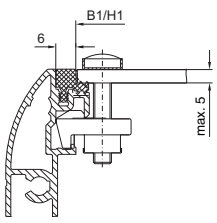

Cross member

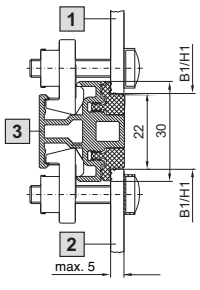

Sealing bar

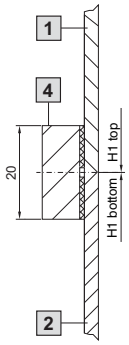

1 Front panel 1
2 Front panel 2
3 Cross member
4 Sealing bar

Optipanel

Optipanel

Support arm, wall and pedestal connection

CP-S
For installation depths 100/150 mm

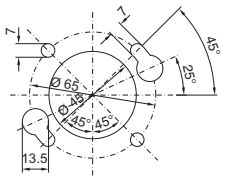

External mounting of support arm components, see page 150.

CP-L, ▭ 120 x 65 mm
For installation depth 100 mm

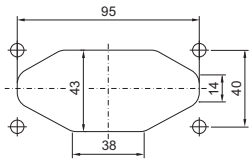

External mounting of support arm components, see page 154.

CP-L, Ø 130 mm
For installation depth 150 mm

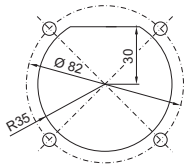

External mounting of support arm components, see page 154.

Optipanel

Keyboard housing (Can be selected using the operating housing configurator at www.rittal.com)

Installation depth 50 mm

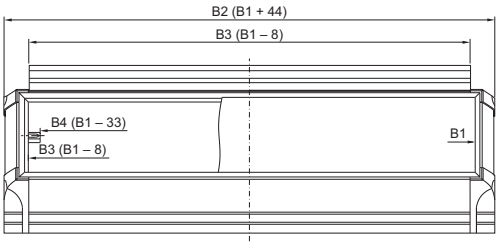

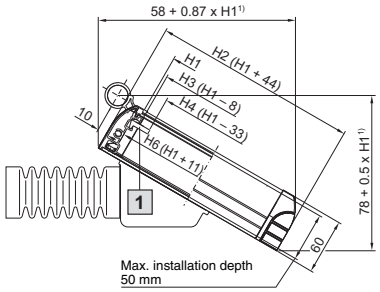

1 CP 6053.XXX: M5
CP 6058.XXX: M4

1) Applies to a tilting angle of 30° to the horizontal.

Installation depth 100 mm

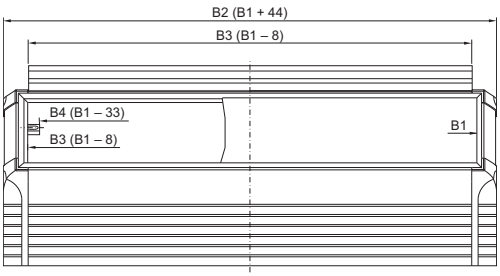

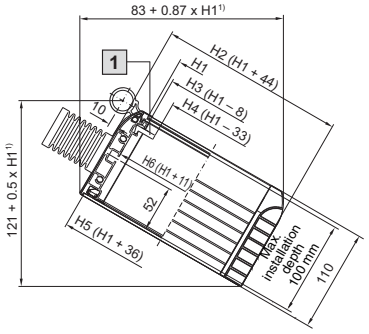

Cross-section, cable tube connection

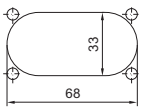

Support for keyboards
Front frame, narrow and combined with cable entry grommet

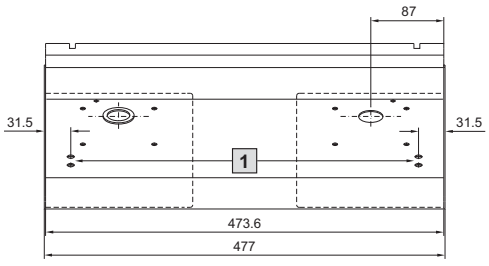

1 Prepared for the support for mouse pad, vertically hinged SM 2383.020

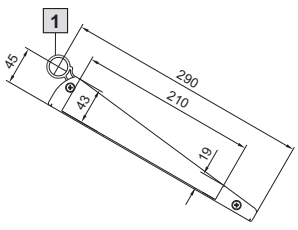

1 Hinged frame connector

Rotation range

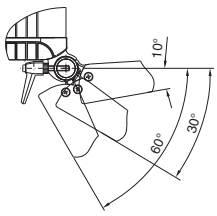

Width dimensions:

B1 = Width of the front panel
B2 = Overall width
B3 = Clearance width between enclosure sections
B4 = Clearance width between the retaining claws of the mounting kit
B5 = Width of rear panel (B1 + 36)
B6 = Clearance width for assembly

Height dimensions:

H1 = Height of the front panel
H2 = Overall height
H3 = Clearance height between enclosure sections
H4 = Clearance height between the retaining claws of the mounting kit
H5 = Height of rear panel
H6 = Clearance height for assembly

Optipanel

Rear cooling panel (Can be selected using the operating housing configurator at www.rittal.com)

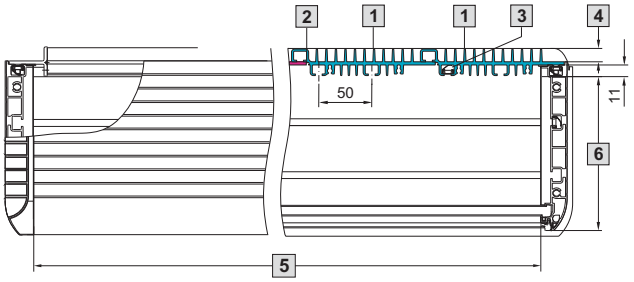

1 Rear cooling panel section, unless otherwise specified the cooling fins are arranged vertically.

2 Width compensating trim panel, fitted in the centre with an even number of heat sinks, or on the right with an uneven number. This position may be modified individually by rotating the entire rear panel through 180°.

3 Spring nut M5, CP 6108.000 for interior installation on screw channels.

4 The total depth of the enclosure is increased by 13 mm.

5 Front panel width for determining the cooling modules and compensating panel.

6 Installation depth is reduced by 11 mm.

Recommendation:
The minimum front panel width for the installation of at least 2 heat sink sections is 240 mm and should not be undercut, if possible.

Optipanel

Keyboard housing connection

Frame hinge connector with Optipanel keyboard housing

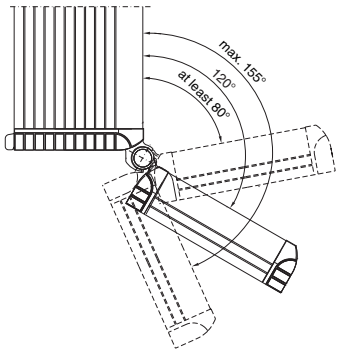

Tilting angle infinitely ajustable from 80° to 155°.

Frame hinge connector with support for keyboards

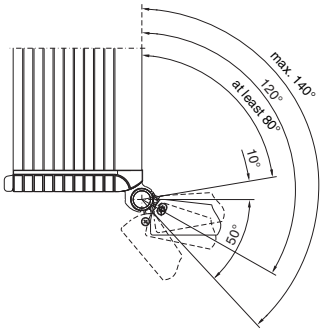

Tilting angle infinitely ajustable from 80° to 140°.

Minimum front panel width (B1):
Depending on the
- Installation depth of the operating housing
- With or without keyboard housing
- Position of the support arm connection

Operating housings

Compact Panel

Catalogue 33, page 142

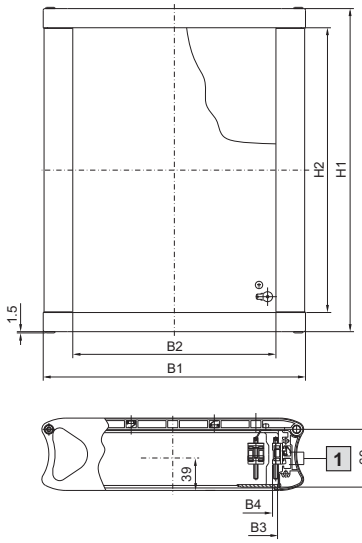

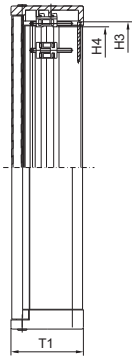

Mounting cut-outs
for support arm connection CP-S

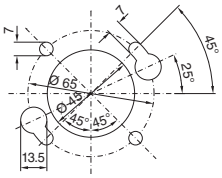

1 Channels for M5 spring nuts

Model No. CP (with support arm connection CP-S)	**6340.000**	**6340.100**	**6340.300**	**6340.400**
Width (B1) mm	241	241	315	315
Height (H1) mm	238	388	238	388
Depth (T1) mm	87	87	87	87
B2 = Enclosure clearance width	170	170	244	244
B3 = Front panel width	178	178	252	252
B4 = Clearance width between screw clamps	164	164	238	238
H2 = Enclosure clearance height	192	342	192	342
H3 = Front panel height	200	350	200	350
H4 = Clearance height between screw clamps	186	336	186	336

Command panel housing with door

Catalogue 33, page 143

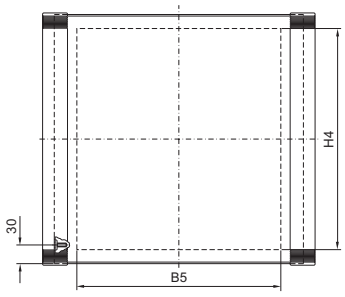

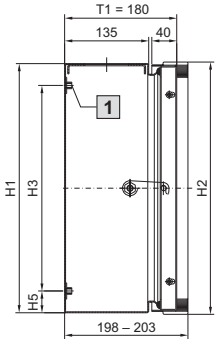

Top view

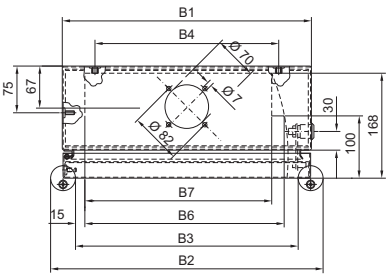

1 Welded nut M6 (6534.000 only)/M8 for the attachment of mounting plates or support rails

Model No. CP	1	**6534.000**	**6535.000**	**6537.000**	**6536.000**	**6538.000**	**6544.000**
Width (B1) mm	Packs of	300	300	300	400	400	500
Height (H1) mm		200	300	400	300	400	500
Depth (T1) mm		180	180	180	180	180	180
B2 = Enclosure width with handle strips		338	338	338	438	438	538
B3 = Clearance opening, front between handle strips		258	258	258	358	358	458
B4 = Spacing of mounting plate attachment		260	215	215	295	295	410
B5 = Max. front cut-out, width		227	227	227	327	327	427
B6 = Hinged width for depth 100 mm		220	220	220	320	320	420
B7 = Hinged width for depth 168 mm		200	200	200	300	300	400
H2 = Enclosure height with handle strips		205	305	405	305	405	505
H3 = Spacing of mounting plate attachment		122	250	350	250	330	445
H4 = Max. front cut-out, height		155	255	355	255	355	455
H5 = Distance from base – mounting plate attachment		39	25	25	25	35	27.5

Operating housings

With handle strips Catalogue 33, page 144

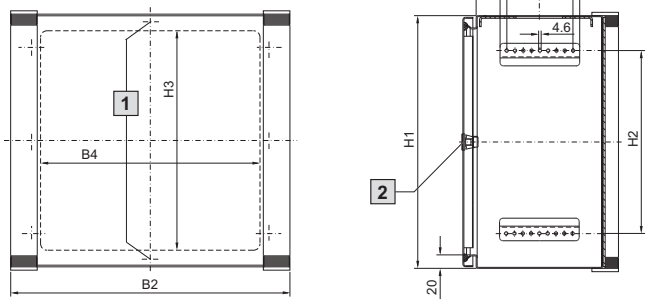

1 Only for CP 6532.200, CP 6533.200

2 For CP 6532.200 2 cams

Note:
Dimensions in brackets for CP 6540.200.

Model No. CP	1	6540.200[1)]	6531.200	6530.200	6532.200	6533.200
Width (B1) mm	Packs of	300	380	380	500	600
Height (H1) mm		200	300	380	500	380
Depth (T1) mm		155	210	210	210	210
B2 = Enclosure width with handle strips		340	420	420	540	640
B3 = Clearance opening, front		260	340	340	460	560
B4 = Cut-out, in enclosure		250	330	330	450	550
H2 = Hole distance of side mounting angles		75	175	275	375	275
H3 = Cut-out, in enclosure		150	250	330	450	330

[1)] Support arm connection and door hinge at the bottom.

Operating housings

With display panel front Catalogue 33, page 145

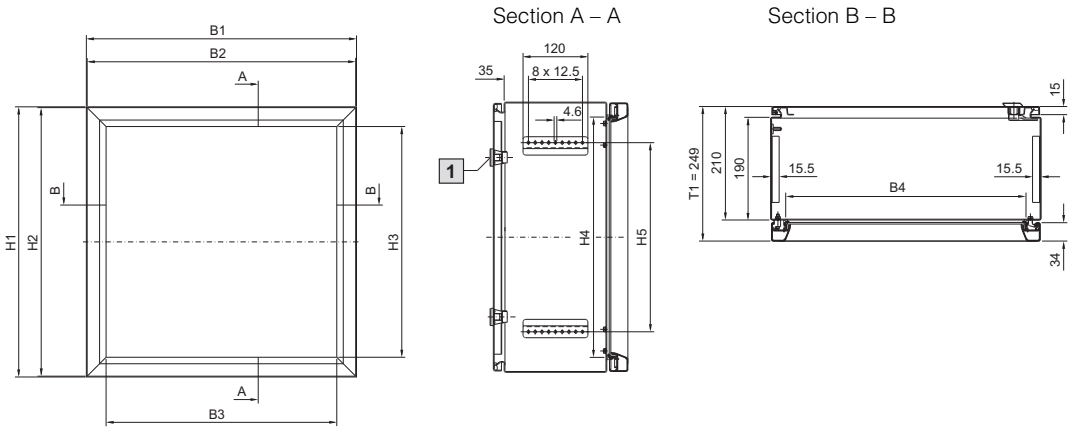

1 For CP 6442.500 only 1 cam in the centre

Model No. CP	1	6442.500	6462.500	6552.500	6662.500
Width (B1) mm	Packs of	380	380	500	600
Height (H1) mm		380	600	500	600
Depth (T1) mm		249	249	249	249
B2 = Width of display panel front		377	377	497	597
B3 = Clearance opening, front		307	307	427	527
B4 = Width of front panel		321	321	441	541
H2 = Height of display panel front		377	597	497	597
H3 = Clearance opening, front		307	527	427	527
H4 = Height of front panel		321	541	441	541
H5 = Hole distance of side mounting angles		250	450	350	450

Support arm system CP-S

Enclosure attachment, tilting, top mounting

Catalogue 33, page 151

IW 6902.670

View A

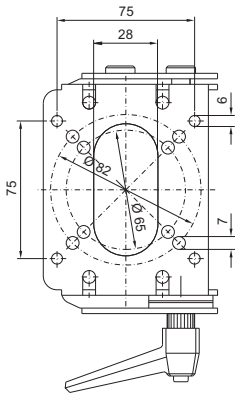

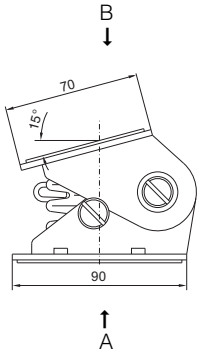

View B

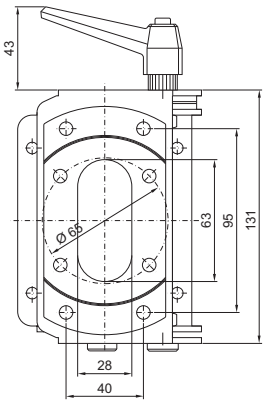

Enclosure attachment CP-S

Catalogue 33, page 151

CP 6501.070

View A

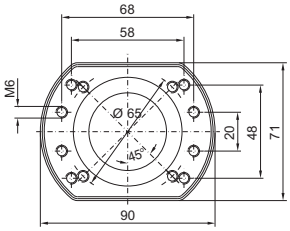

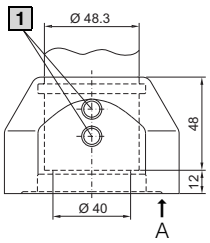

Mounting cut-outs

a)

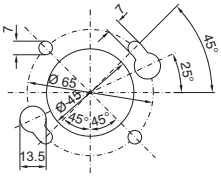

b)

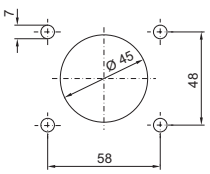

Like cut-out a), but without lock holes

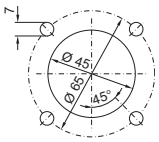

1 Clamping screw

Enclosure coupling CP-S

For support arm connection CP-S, round Catalogue 33, page 151

CP 6501.050

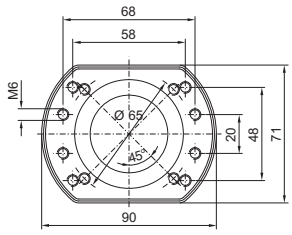

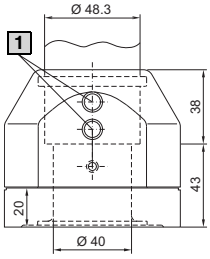

Mounting cut-outs

a)

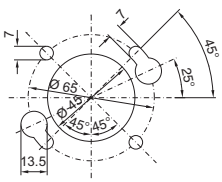

b)

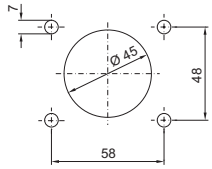

Like cut-out a), but without lock holes

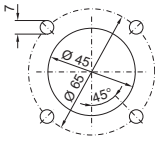

1 Clamping screw

Enclosure coupling CP-S

For support arm connection CP-L ▭ 120 x 65 mm Catalogue 33, page 151

CP 6501.130

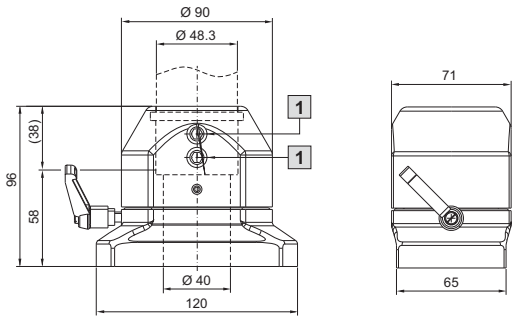

Mounting cut-out, enclosure

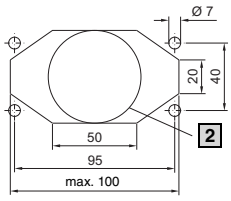

2 Alternative max. Ø 55 mm

1 Locking screw

Angle coupling 90° CP-S

Catalogue 33, page 151

CP 6501.120

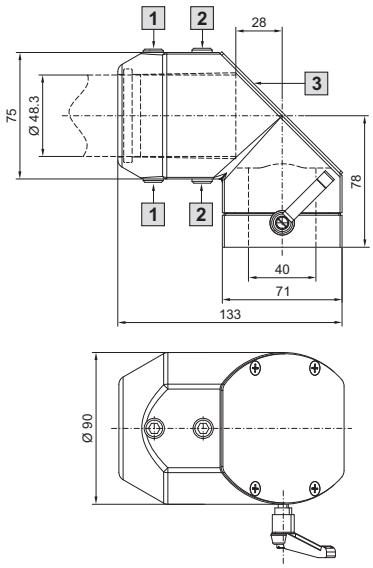

1 Locking screw
2 Adjusting screw
3 Removable plate

Possible mounting cut-outs of enclosures

a)

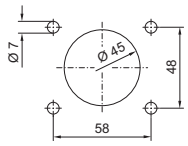

b)

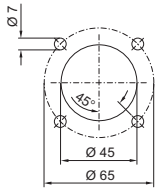

c)

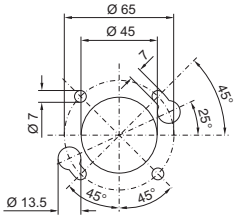

Version c) for quick/one-man assembly

Support section CP-S

Catalogue 33, page 151

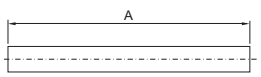

A mm	**Model No. CP**
500	**6501.000**
1000	**6501.020**

$A_{min.}$ = 100 mm
$A_{max.}$ = 2000 mm

Support arm system CP-S

Angle piece 90° CP-S

Catalogue 33, page 151

CP 6501.140

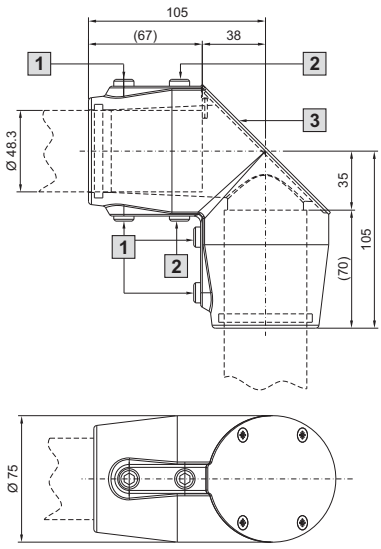

1 Locking screw
2 Adjusting screw
3 Removable plate

Top-mounted joint CP-S

Catalogue 33, page 151

CP 6501.160

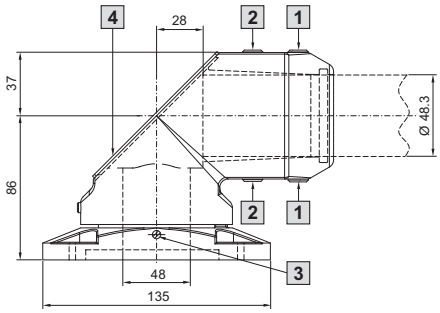

Mounting cut-out

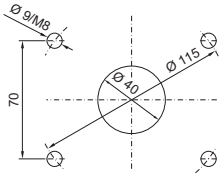

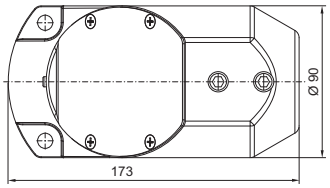

1 Locking screw
2 Adjusting screw
3 Screw for adjusting rotatability
4 Removable plate

Wall-mounted hinge CP-S

Catalogue 33, page 151

CP 6501.150

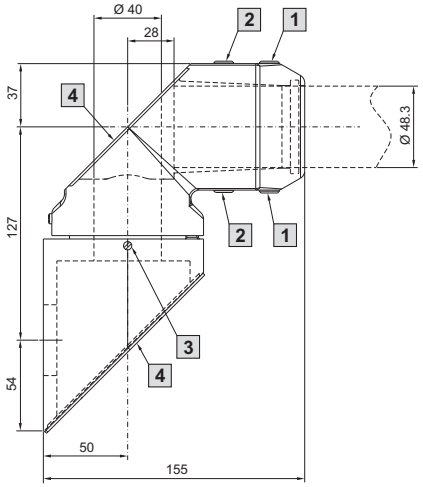

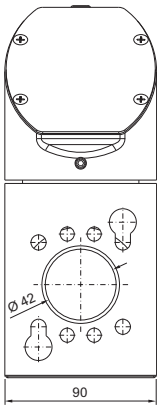

Mounting cut-out 90°

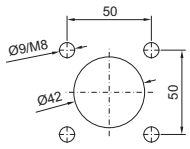

1 Locking screw
2 Adjusting screw
3 Screw for adjusting rotatability
4 Removable plate

Wall/base mounting CP-S

Catalogue 33, page 151

CP 6501.110

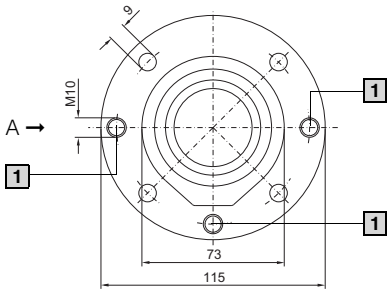

Mounting cut-out

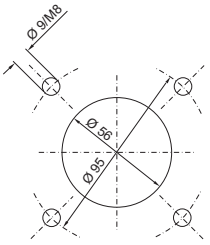

1 Adjusting screw

View A

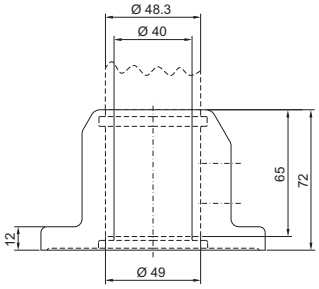

Support arm system CP-L

Tilting adaptor 10° CP-L

For support arm connection Ø 130 mm Catalogue 33, page 155

CP 6527.010

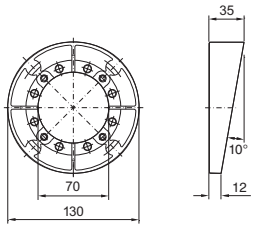

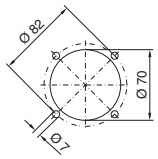

Mounting cut-out
Enclosure CP-L, Ø 130 mm

Tilting adaptor 10° CP-L

For support arm connection ▭ 120 x 65 mm Catalogue 33, page 155

CP 6527.110

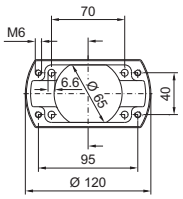

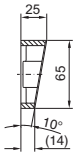

Mounting cut-out
Enclosure CP-L, ▭ 120 x 65 mm

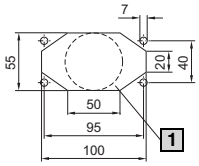

1 Alternative max. Ø 55 mm

Tilting adaptor ±45° CP-L

For support arm connection Ø 130 mm Catalogue 33, page 155

CP 6529.010

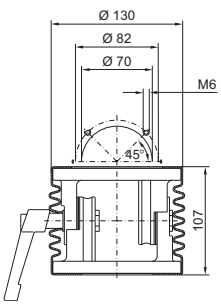

Mounting cut-out
Enclosure CP-L, Ø 130 mm

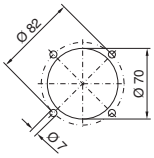

Connection console CP-L

Catalogue 33, page 155

CP 6508.010

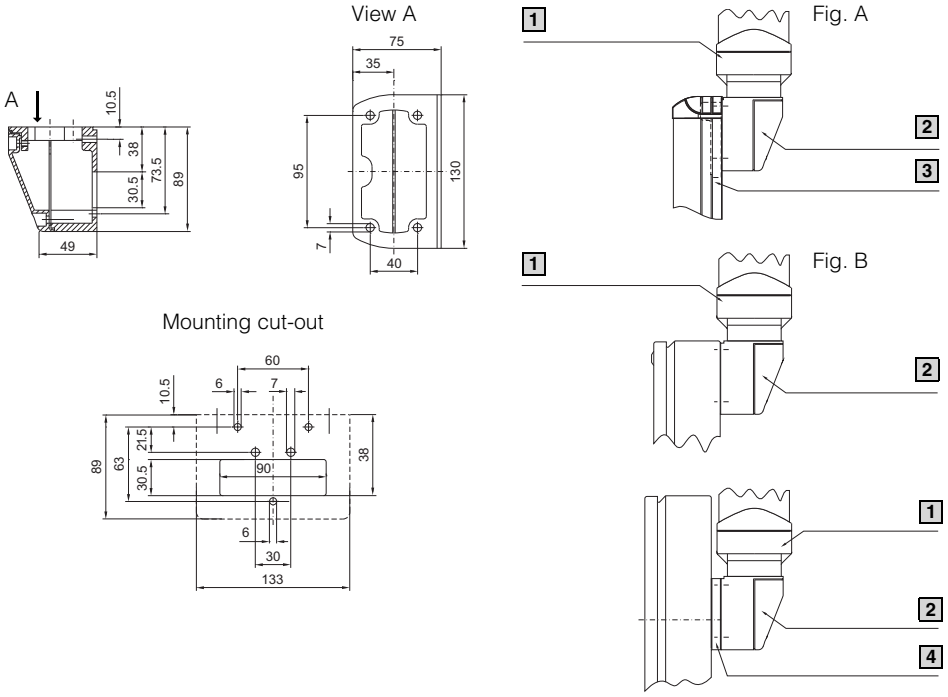

1 Support arm component CP-L, ▭ 120 x 65 mm

2 Connection console CP-L

3 Support plate (inside)

4 Spacer plate

Enclosure attachment CP-L

For support arm connection Ø 130 mm Catalogue 33, page 155

CP 6525.510

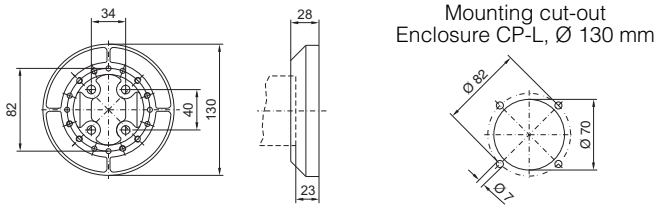

Enclosure attachment CP-L

For support arm connection ▭ 120 x 65 mm Catalogue 33, page 155

CP 6525.610

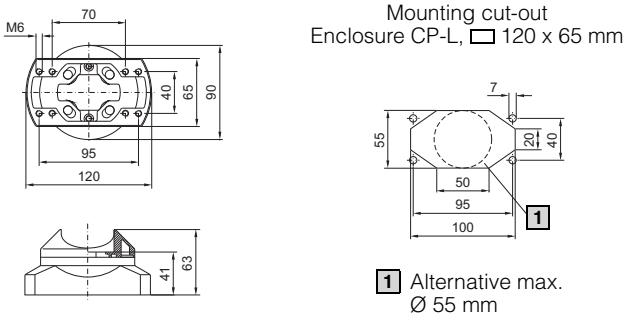

1 Alternative max. Ø 55 mm

Support arm system CP-L

Enclosure attachment, locatable CP-L

For support arm connection ▭ 120 x 65 mm Catalogue 33, page 155

CP 6525.210

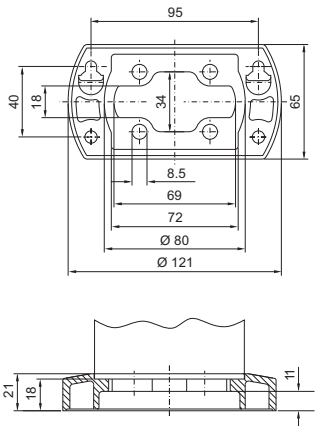

Mounting cut-out
Enclosure CP-L, ▭ 120 x 65 mm

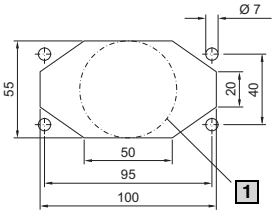

1 Alternative max. Ø 55 mm

Housing coupling CP-L

For support arm connection Ø 130 mm Catalogue 33, page 155

CP 6525.010

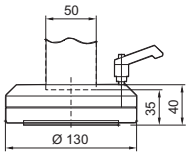

Mounting cut-out
Enclosure CP-L, Ø 130 mm

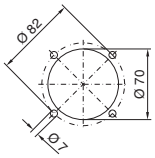

Housing coupling CP-L

For support arm connection ▭ 120 x 65 mm Catalogue 33, page 155

CP 6525.110

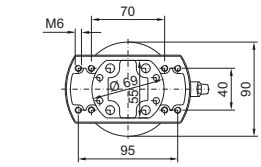

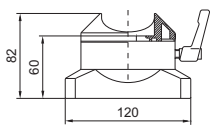

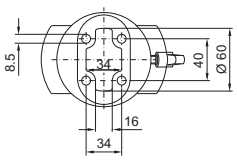

Mounting cut-out
Enclosure CP-L, ▭ 120 x 65 mm

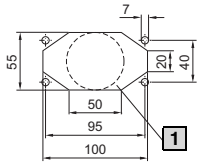

1 Alternative max. Ø 55 mm

Angle coupling 90° CP-L

For support arm connection Ø 130 mm Catalogue 33, page 155

CP 6526.010

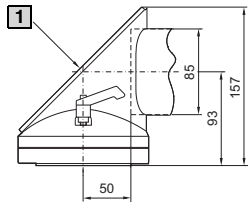

1 Removable plate

Mounting cut-out
Enclosure CP-L, Ø 130 mm

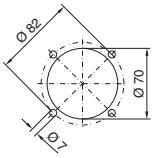

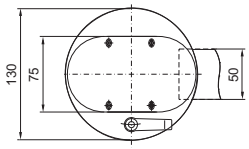

Support section CP-L

Catalogue 33, page 155

Closed

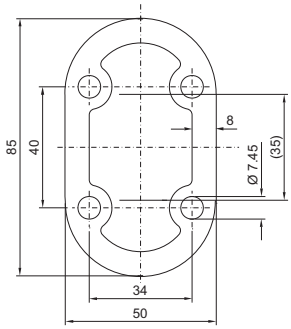

Open

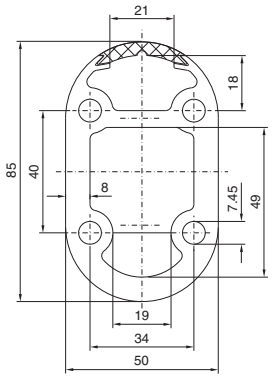

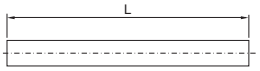

Length (L) mm	Support section	
	Closed	Open
	Model No. CP	
250	**6509.000**	**–**
500	**6511.000**	**–**
1000	**6513.000**	**6513.050**
2000	**6515.000**	**–**

Angle piece 90° CP-L

Catalogue 33, page 155

CP 6524.010

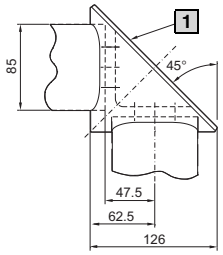

1 Removable plate
75 x 174 mm

Support arm system CP-L

Articulated joint 90° CP-L

Catalogue 33, page 155

CP 6524.210

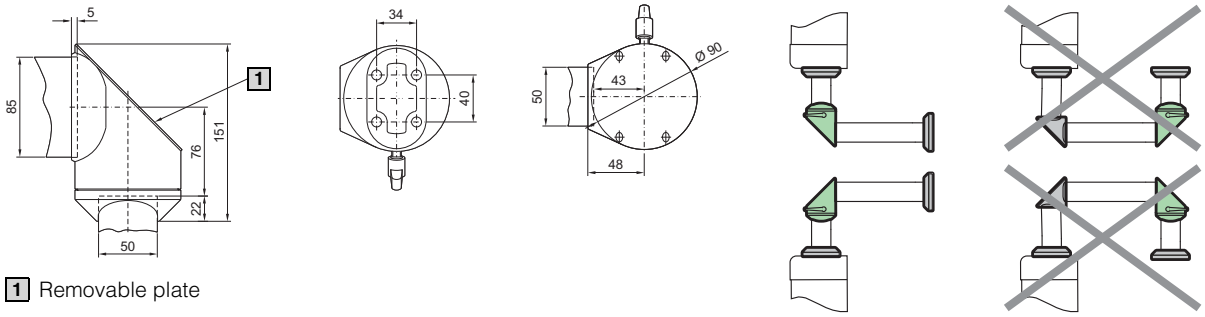

1 Removable plate

Intermediate hinge CP-L

Catalogue 33, page 155

CP 6523.010

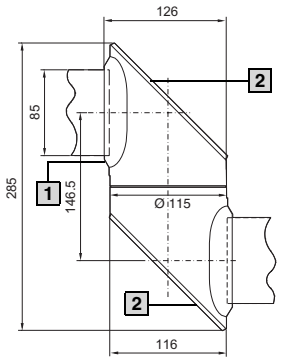

1 Screw for adjusting rotatability

2 Removable plate

Wall/base mounting, large CP-L

Catalogue 33, page 155

CP 6520.010

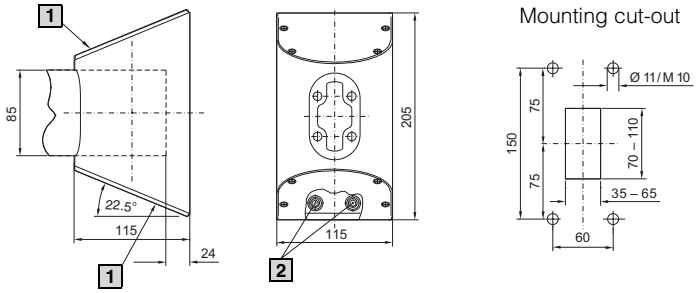

1 Removable plate

2 Adjusting screws

Top-mounted joint CP-L

Catalogue 33, page 155

CP 6522.010

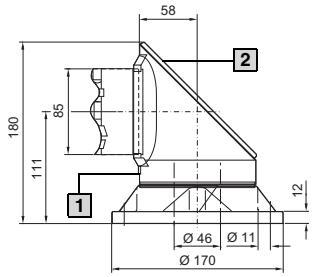

Mounting cut-out

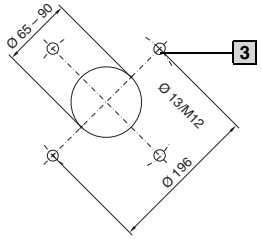

1 Screw for adjusting rotatability

2 Removable plate

3 Mounting surface

Wall-mounted hinge CP-L

Catalogue 33, page 155

CP 6521.010

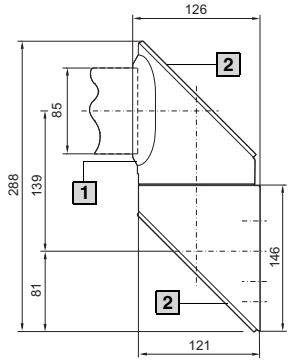

Mounting cut-out

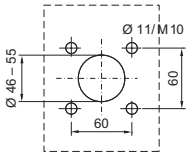

1 Screw for adjusting rotatability

2 Removable plate

Wall/base mounting, small, CP-L

Catalogue 33, page 155

CP 6520.510

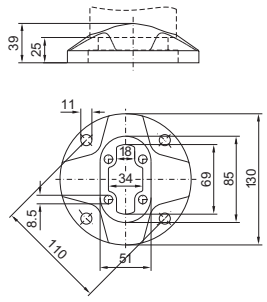

Mounting cut-out

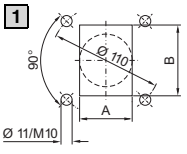

1 Alternative Ø 52 mm
A = max. 52 mm
B = max. 70 mm

Support arm system CP-C

Enclosure attachment CP-C

For command panels with support arm connection CP-L Ø 130 mm and CP-XL Catalogue 33, page 159

CP 6070.200

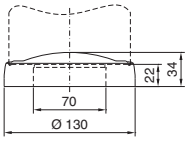

Mounting cut-out
Enclosure CP-L,
Ø 130 mm

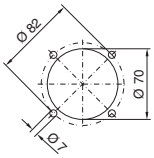

Mounting cut-out
Enclosure CP-XL

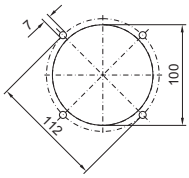

Housing coupling CP-C

For command panels with support arm connection CP-L Ø 130 mm Catalogue 33, page 159

CP 6070.000

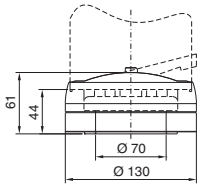

Mounting cut-out
Enclosure CP-L, Ø 130 mm

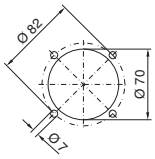

Angle coupling 90° CP-C

For command panels with support arm connection CP-L Ø 130 mm Catalogue 33, page 159

CP 6071.200

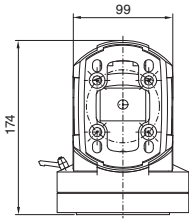

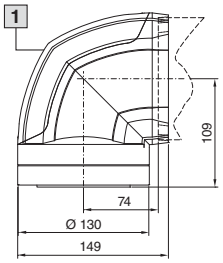

1 Removable cover

Mounting cut-out
Enclosure CP-L, Ø 130 mm

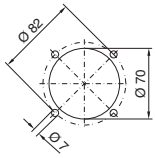

Support section CP-C, closed and open

Catalogue 33, page 159

Support section
closed

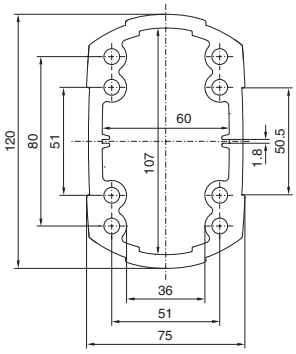

Support section
open

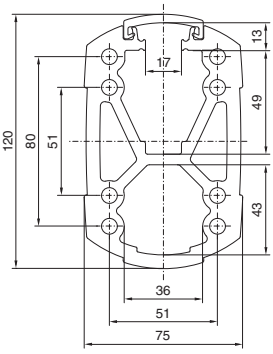

Length mm	Support section	
	Closed	Open
	Model No. CP	
250	**6074.000**	**–**
500	**6074.100**	**6075.100**
1000	**6074.300**	**6075.300**
2000	**6074.500**	**6075.500**

Angle piece 90° CP-C

Catalogue 33, page 159

CP 6071.400

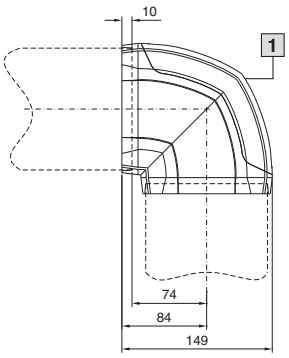

1 Removable cover

Intermediate hinge CP-C

Catalogue 33, page 159

CP 6071.800

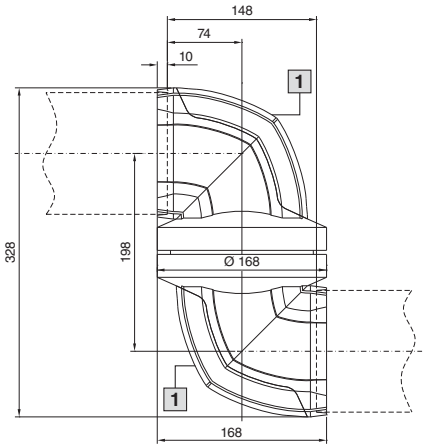

1 Removable cover

Top-mounted joint CP-C

Vertical outlet Catalogue 33, page 159

CP 6072.800

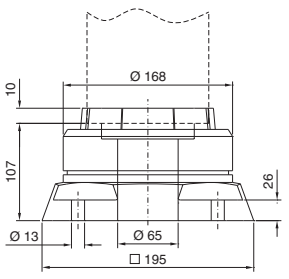

Mounting cut-out

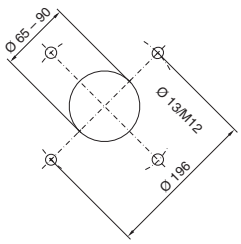

Support arm system CP-C

Top-mounted joint CP-C

Horizontal outlet Catalogue 33, page 159

CP 6072.600

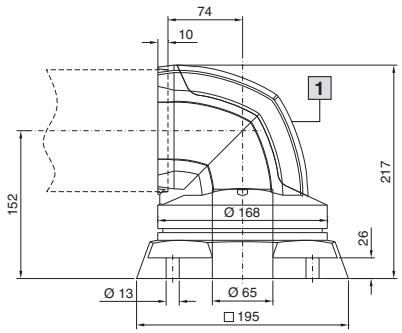

Mounting cut-out

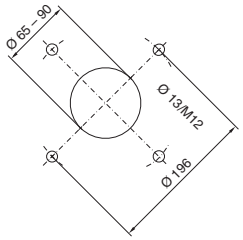

1 Removable cover

Wall-mounted hinge CP-C

Vertical outlet Catalogue 33, page 159

CP 6072.400

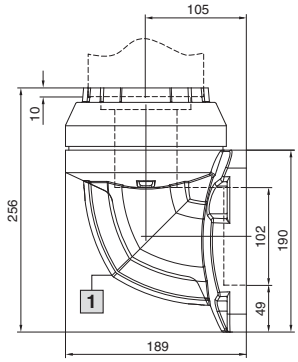

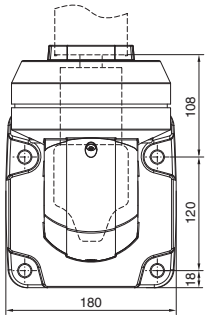

Mounting cut-out

Top-mounted

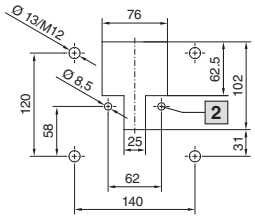

Suspended

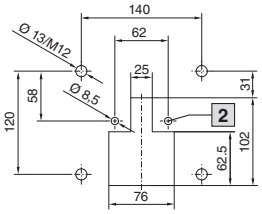

1 Removable cover

2 Attachment by means of pins

Wall-mounted hinge CP-C

Horizontal outlet Catalogue 33, page 159

CP 6072.500

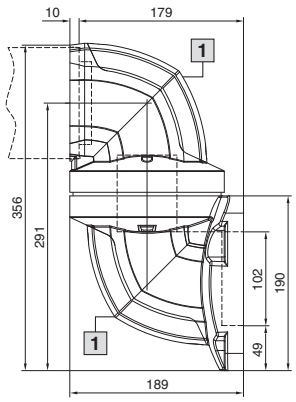

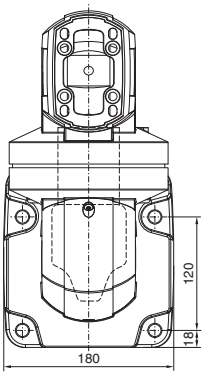

Mounting cut-out

Top-mounted

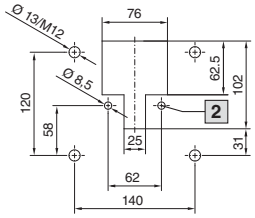

Suspended

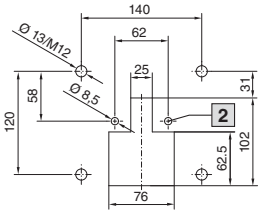

1 Removable cover

2 Attachment by means of pins

Wall/base mounting bracket, small, CP-C

Catalogue 33, page 159

CP 6072.200

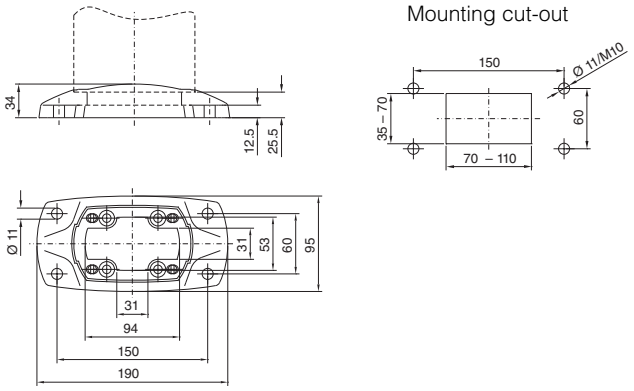

Wall/base mounting bracket, large, CP-C

Catalogue 33, page 159

CP 6072.000

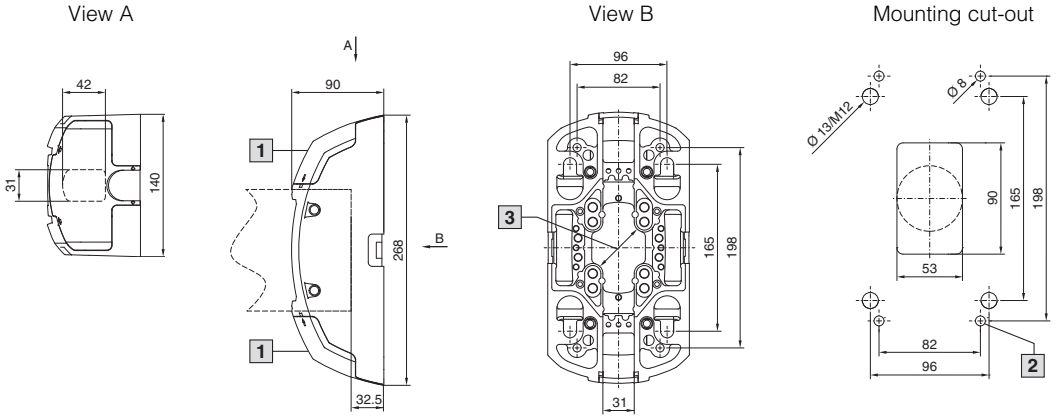

1 Removable cover

2 Attachment by means of pins

3 Max. Ø 52 mm

Support arm system CP-XL

Tilting adaptor 10° CP-XL

Catalogue 33, page 163

CP 6023.010

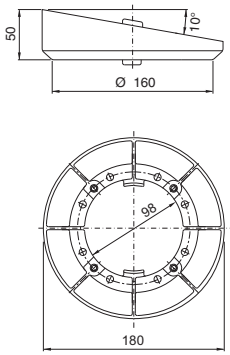

Mounting cut-out
Enclosure CP-XL

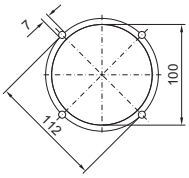

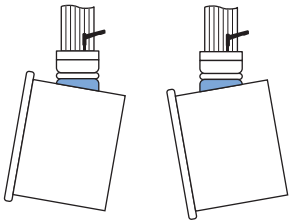

Enclosure attachment CP-XL, round

Catalogue 33, page 163

CP 6130.610

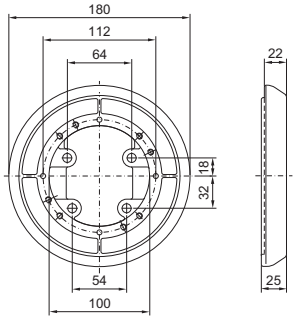

Enclosure attachment CP-XL, rectangular

Catalogue 33, page 163

CP 6130.510

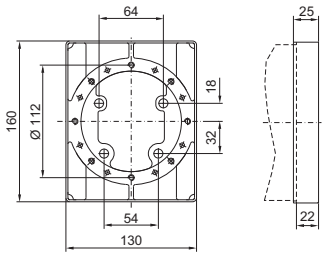

Mounting cut-out
Enclosure CP-XL

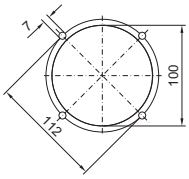

Housing coupling CP-XL

Catalogue 33, page 163

CP 6130.010

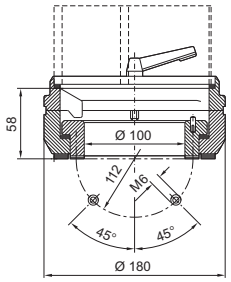

Mounting cut-out
Enclosure CP-XL

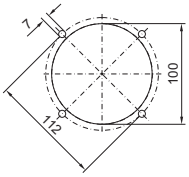

Angle coupling 90° CP-XL

Catalogue 33, page 163

CP 6040.010

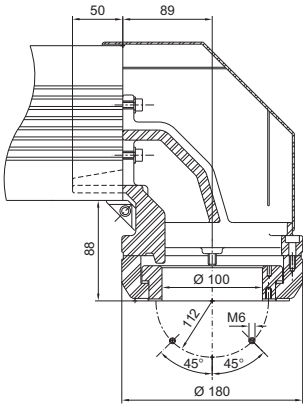

Mounting cut-out
Enclosure CP-XL

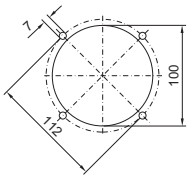

Top-mounting is only possible as shown in the diagrams below (without intermediate hinge).

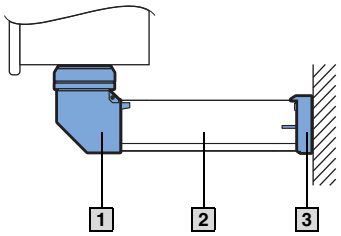

1 Angle coupling CP 6040.0X0
2 Support section CP-XL
3 Wall/base mounting bracket CP 6160.0X0

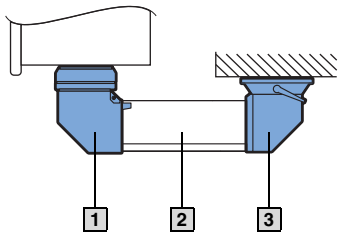

1 Angle coupling CP 6040.0X0
2 Support section CP-XL
3 Top-mounted joint CP 6170.0X0

Support section CP-XL, closed and open

Catalogue 33, page 163

Support section closed

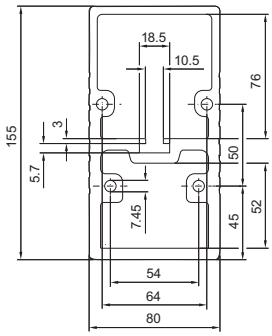

Support section open

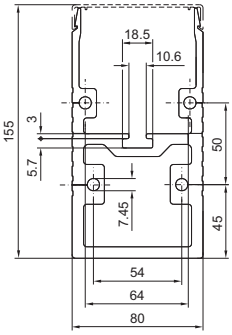

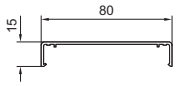

Length mm	Support section	
	Closed	Open
	Model No. CP	
500	**6050.500**	**6050.000**
1000	**6100.500**	**6100.000**
2000	**6200.500**	**6200.000**

Angle piece 90° CP-XL

Catalogue 33, page 163

CP 6140.010

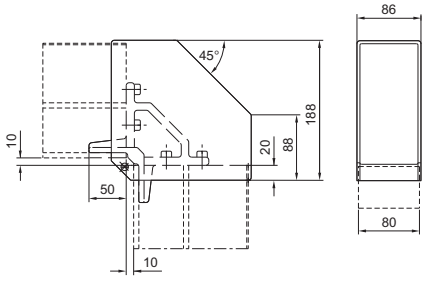

CP 6180.010

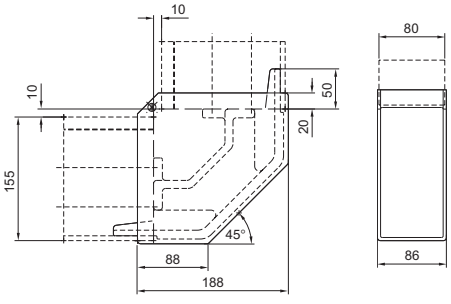

Support arm system CP-XL

Intermediate hinge CP-XL

Catalogue 33, page 163

CP 6120.010

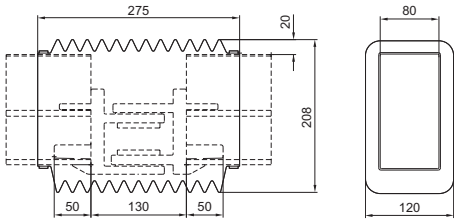

Top-mounted joint CP-XL

Catalogue 33, page 163

CP 6170.010

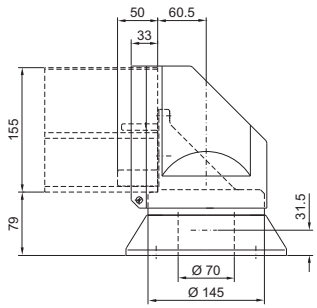

Mounting cut-out

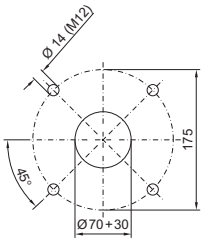

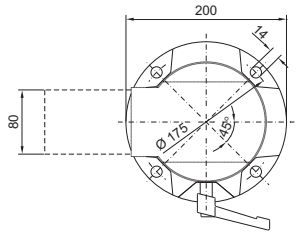

Wall-mounted hinge CP-XL

Catalogue 33, page 163

CP 6110.010

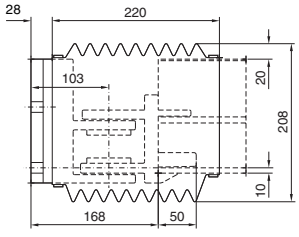

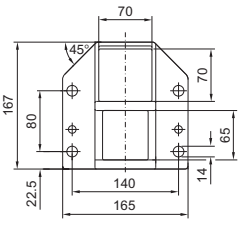

Mounting cut-out

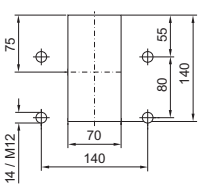

Wall/base mounting CP-XL

Catalogue 33, page 163

CP 6160.010

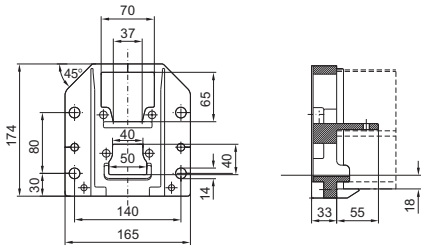

Mounting cut-out

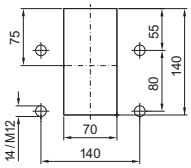

Rotation range restrictor CP-XL

Catalogue 33, page 163

CP 6110.100

Adjustable swivel area:

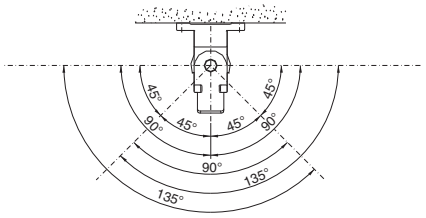

Connection components

Connection adaptor CP-L Ø 130 mm to CP-L ▭ 120 x 65 mm

Catalogue 33, page 164

CP 6071.000

Section A – A

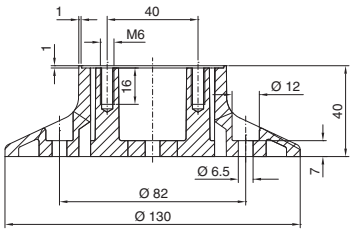

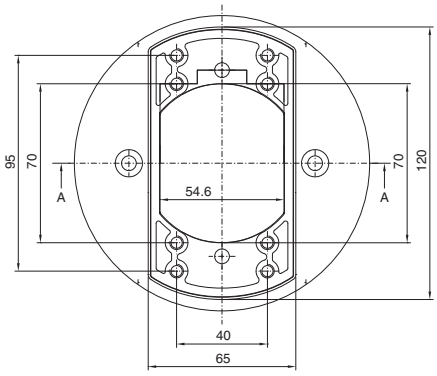

Connection adaptor CP-L to CP-XL

Catalogue 33, page 164

CP 6528.010

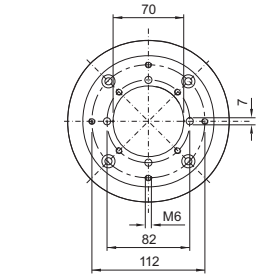

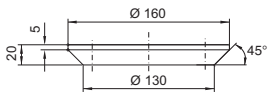

CP 6528.510

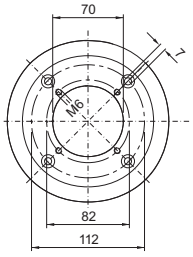

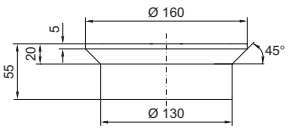

Adaptor for Siemens Pro-Panel

Catalogue 33, page 164

CP 6528.450

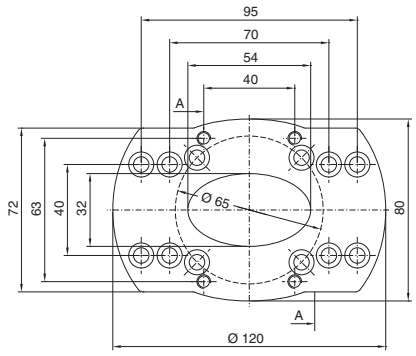

Section A – A

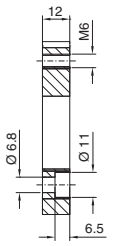

Connection console CP-L for Beckhoff Control-Panels

Catalogue 33, page 164

CP 6508.020

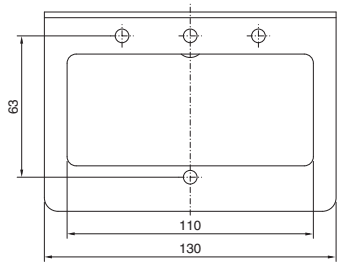

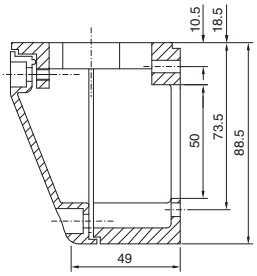

Mounting cut-out
for the rear of the enclosure

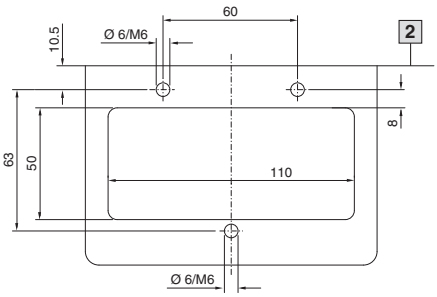

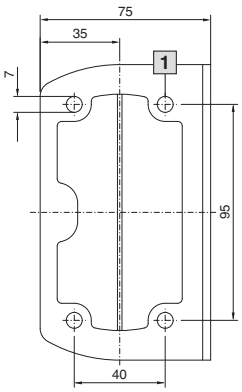

1 Connection hole pattern for CP 6525.110/.610, CP 6527.110

2 Outer edge of enclosure = upper edge of connection console

Connection plate CP-L

With reinforcement plate Catalogue 33, page 165

CP 6528.210

CP-L

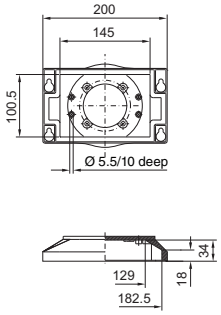

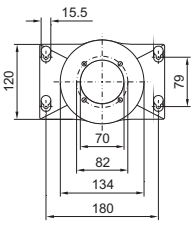

Mounting cut-out CP-L

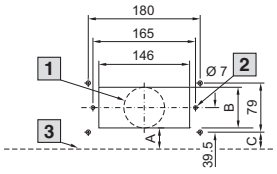

1 Alternative Ø B

2 Ø 6 mm only with metal enclosures for securing the reinforcement plate

3 Outer edge of enclosure at the rear

Connection components

Enclosure attachment, tilting, base mounting

CP-L ▭ 120 x 65 mm Catalogue 33, page 165

IW 6902.640

View B

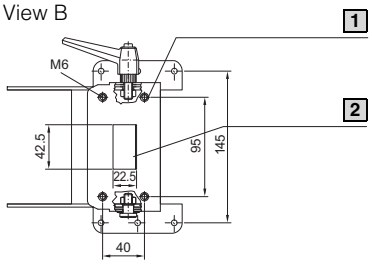

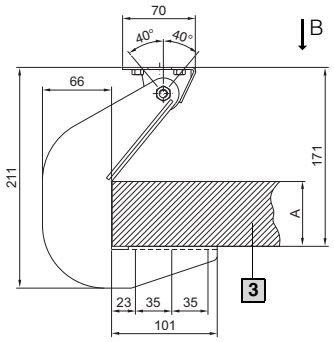

A = max. 62 mm

1 Prepared for enclosure with connection CP-L/CP-S, ▭ 120 x 65 mm or connection console CP-L CP 6508.0X0

2 Preparation for connector grommet SZ 2400.300/SZ 2400.500

3 Worktop, e.g. IW 6902.310/IW 6902.320

Connection adaptor CP-C to CP-L

Catalogue 33, page 165

CP 6071.600

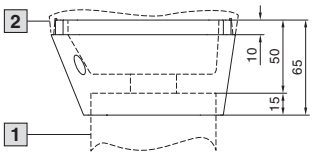

1 Support section CP-L
Support arm, height-adjustable CP-L

2 Connection of the CP-C system components CP 6071.400, CP 6071.800

Housing coupling CP-XL

For desktop mounting Catalogue 33, page 166

CP 6528.410

Mounting cut-out for surfaces

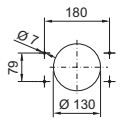

Mounting cut-out on the enclosure side

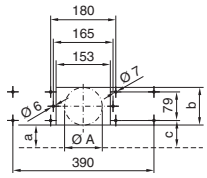

A or Ø A is manufactured to order in the case of Optipanel and Comfort Panel.
$A_{max.}$ = 100 mm

	Installation depth mm	a	b	c
Comfort Panel	152/308	28.9	77.9	30.5
	191 – 464	43.1	82.5	48.1
Optipanel	150	34	65.5	28
Metal enclosure	–	1)	86	1)

1) Make the drilled holes/cut-out in the centre of the enclosure reinforcement plate.

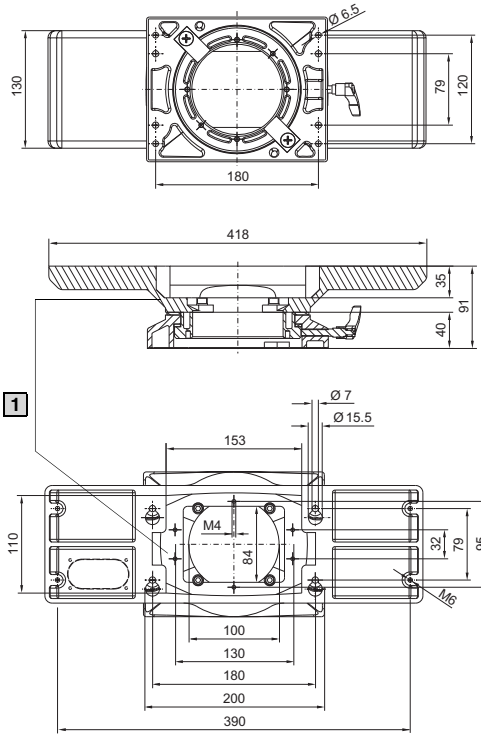

1 Space/preparation for assembly of adaptors with connector cut-out, 24-pole SZ 2477.010

Support arm, height-adjustable for support arm system CP-L

Catalogue 33, page 166

CP 6510.210

20 kg version

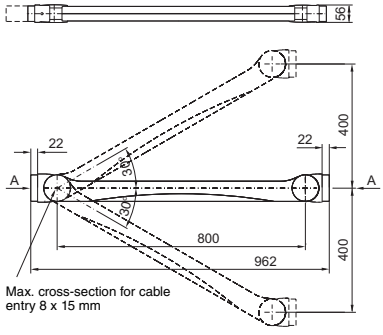

View A

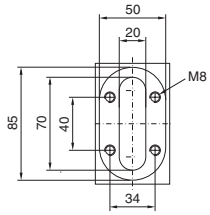

CP 6510.330, CP 6510.340

32 kg and 40 kg versions

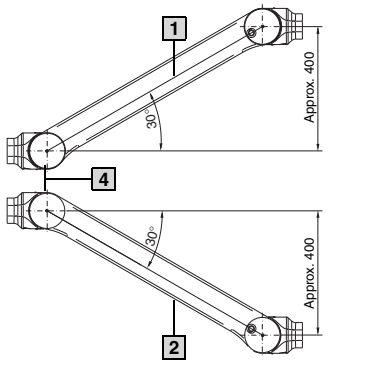

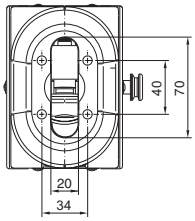

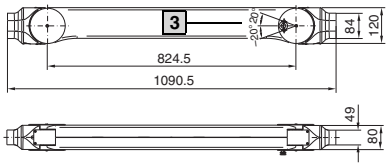

1 Top end stop
2 Bottom end stop
3 Lockable at +20° or –20°
4 Max. cross-section for cable entry 16 x 40 mm

Connection components

Pivot CP-L

With/without jib Catalogue 33, page 167

CP 6016.700

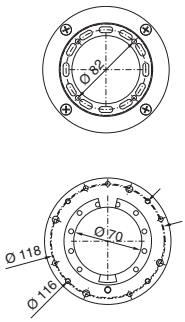

Mounting cut-out, enclosure side CP-L Ø 130 mm

Option 1
Mounting cut-out, machine side

Option 2
Mounting cut-out, machine side

CP 6016.600

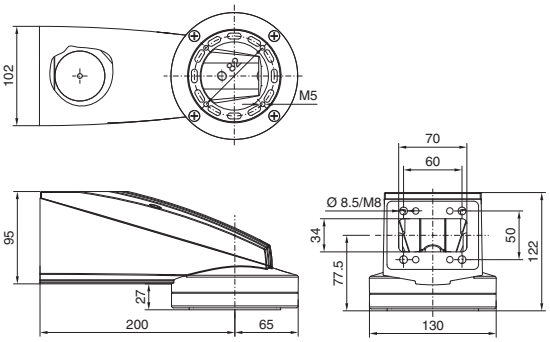

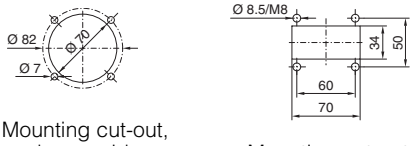

Mounting cut-out, enclosure side CP-L Ø 130 mm

Mounting cut-out, machine side

Support arm bracket 90° CP-L

Catalogue 33, page 167

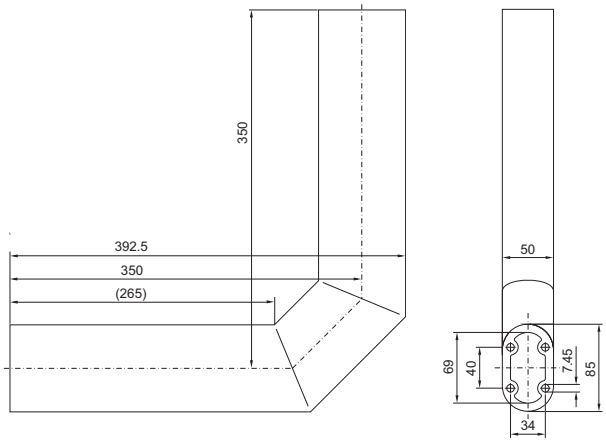

Colour RAL	Weight kg	Model No. CP
7035	3.4	**6519.000**

Angle adaptor 90°

Catalogue 33, page 168

CP 6501.090
CP-L to CP-S

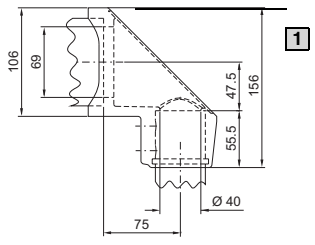

CP 6528.110
CP-XL to CP-L

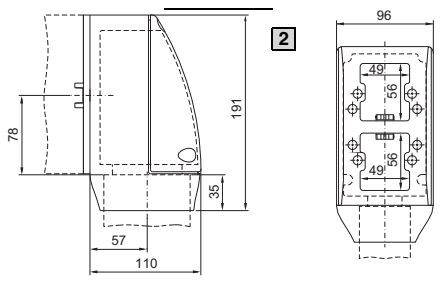

1 Removable plate 71 x 149 mm
2 Removable cover

Pedestal, modular

Catalogue 33, page 169

Pedestal base plate
CP 6143.200

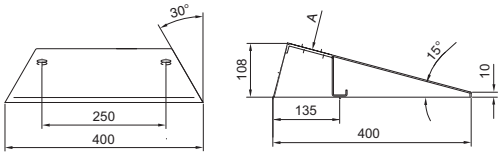

View A

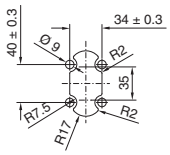

Pedestal base plate
CP 6137.035, CP 6137.535



View A

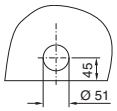

View B

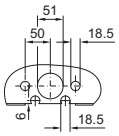

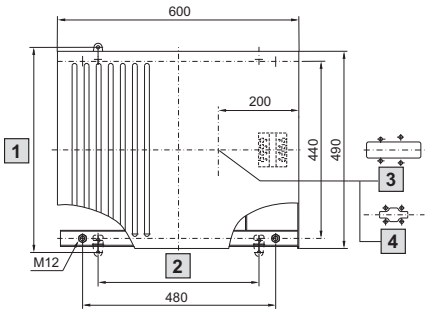

1 510 for base anchoring with KL 1580.000, KL 1590.000

2 400 for base anchoring with KL 1580.000, KL 1590.000

3 Cut-out for CP 6137.035

4 Cut-out for CP 6137.535

Pedestal base plate
CP 6146.100

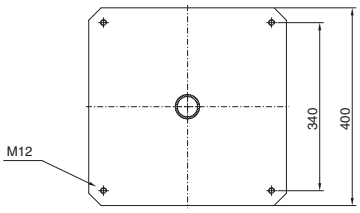

Support section
CP 6146.200

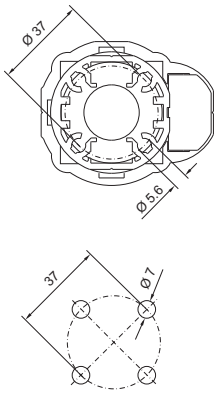

Tilt adjustment
CP 6146.300

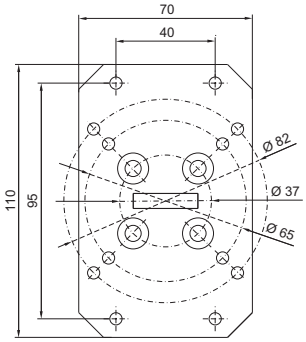

Stand systems

Pedestal, complete

CP 6141.100, CP 6141.200 Catalogue 33, page 170

CP 6141.100
for command panels

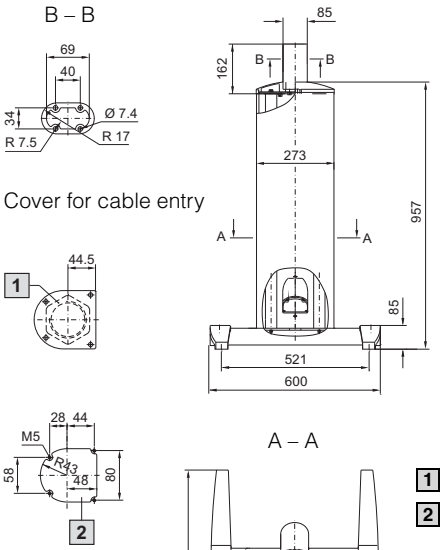

CP 6141.200
for IW worktops

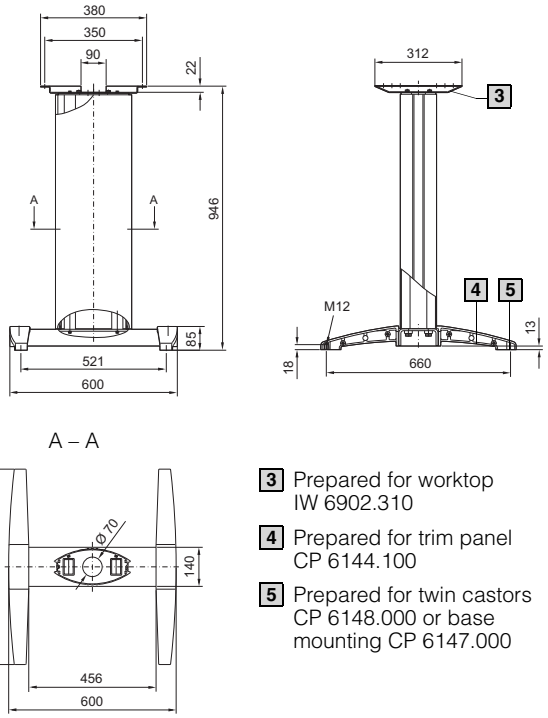

1 Max. PG 48/M50

2 Cross-section cable entry

3 Prepared for worktop IW 6902.310

4 Prepared for trim panel CP 6144.100

5 Prepared for twin castors CP 6148.000 or base mounting CP 6147.000

CP 6136.000, CP 6136.500 Catalogue 33, page 170

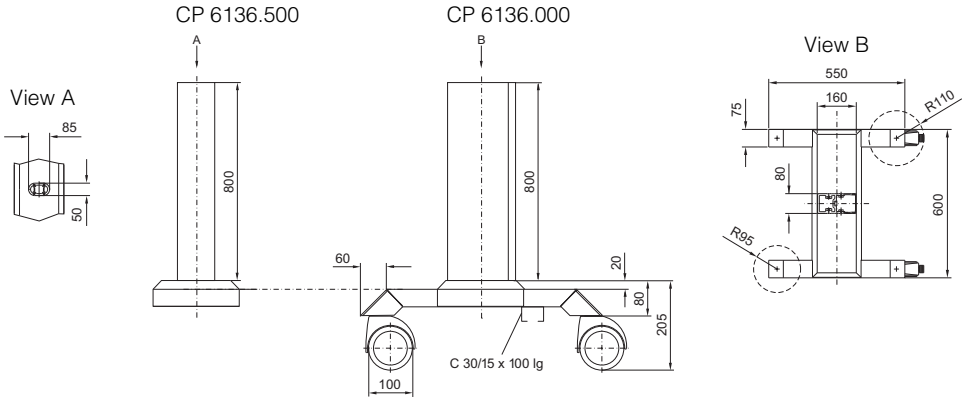

CP 6135.000 Catalogue 33, page 170

Mounting cut-out

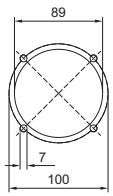

Pillar, small

CP 6215.000 Catalogue 33, page 171

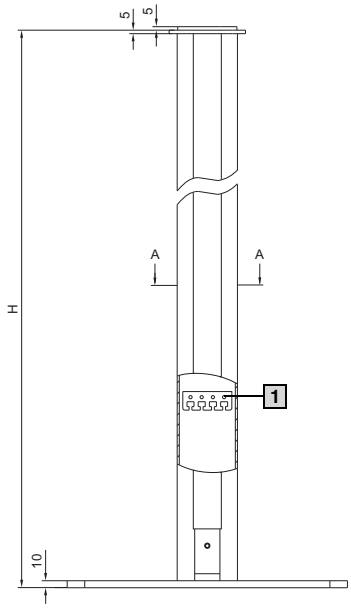

H mm	Model No. CP
1093	**6215.000**
as per specifications	**6215.100**

Top view

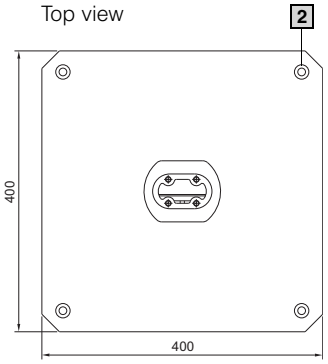

Section A – A

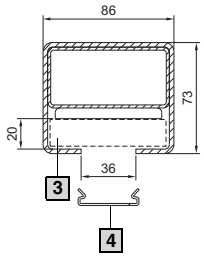

1 Cable clamping bracket
2 Countersink Ø 11 mm
3 Cable laying space
4 Cable space cover

Connection plate, top

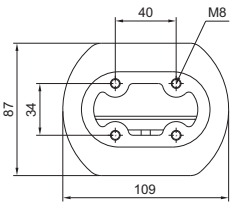

CP 6214.500 Catalogue 33, page 171

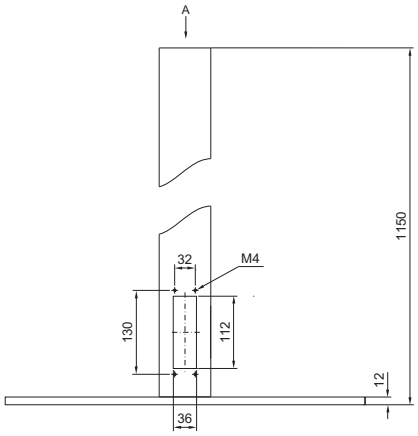

View A

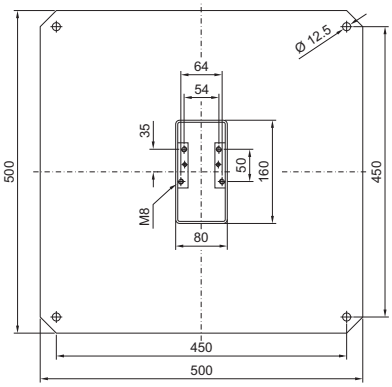

Stand systems

Pillar

CP 6214.000, CP 6220.000 Catalogue 33, page 172

Model No. CP	A	B	C	D
6214.000	140	200	280	120
6220.000	200	300	400	180

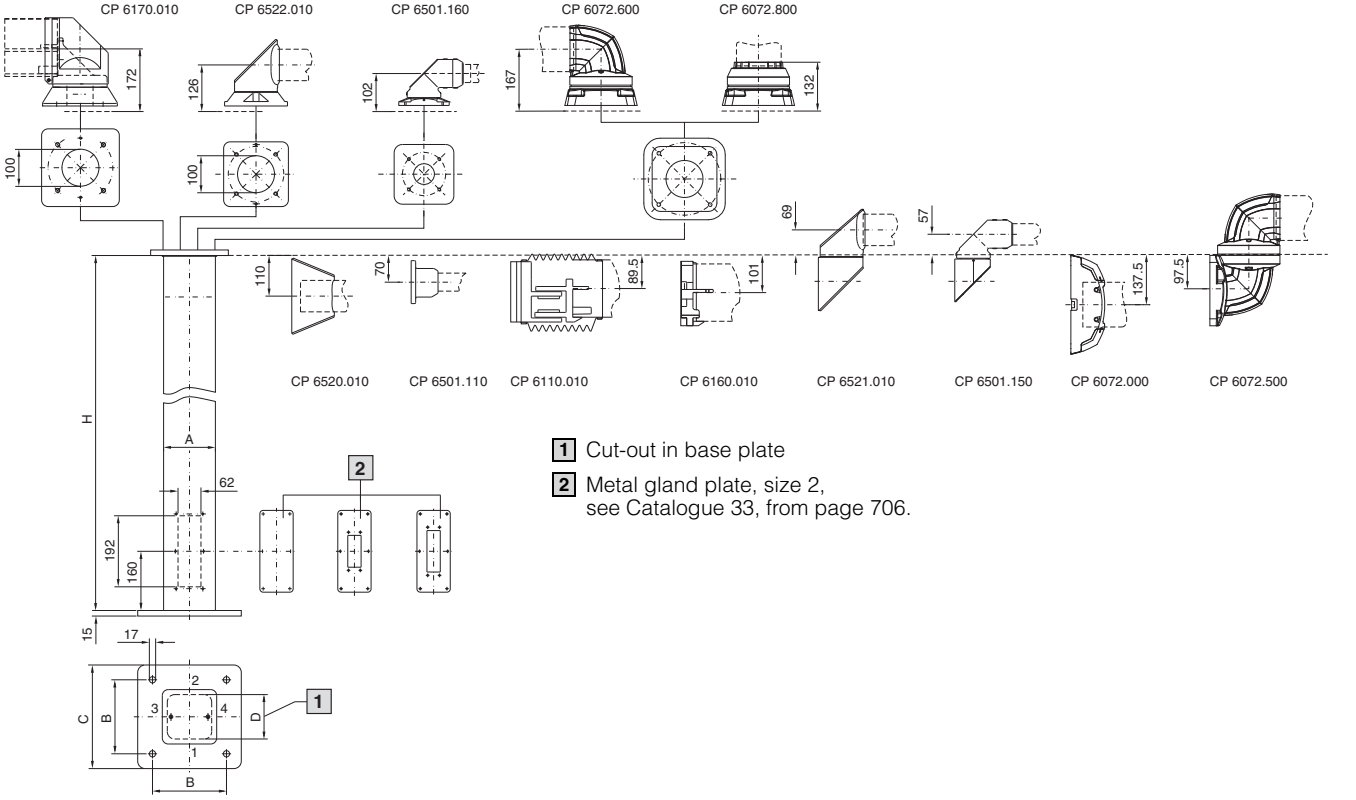

1 Cut-out in base plate

2 Metal gland plate, size 2, see Catalogue 33, from page 706.

Enclosure reinforcement

Catalogue 33, page 173

CP 6143.310

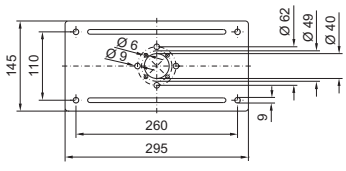

CP 6143.210

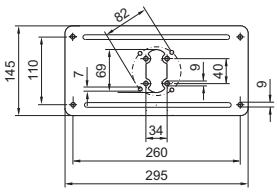

CP 6503.000

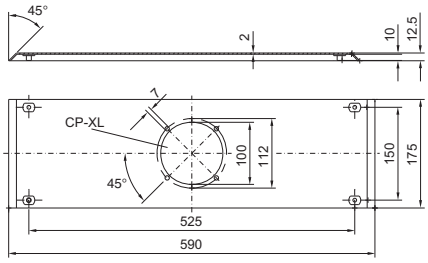

Terminal boxes HD

Catalogue 33, page 176

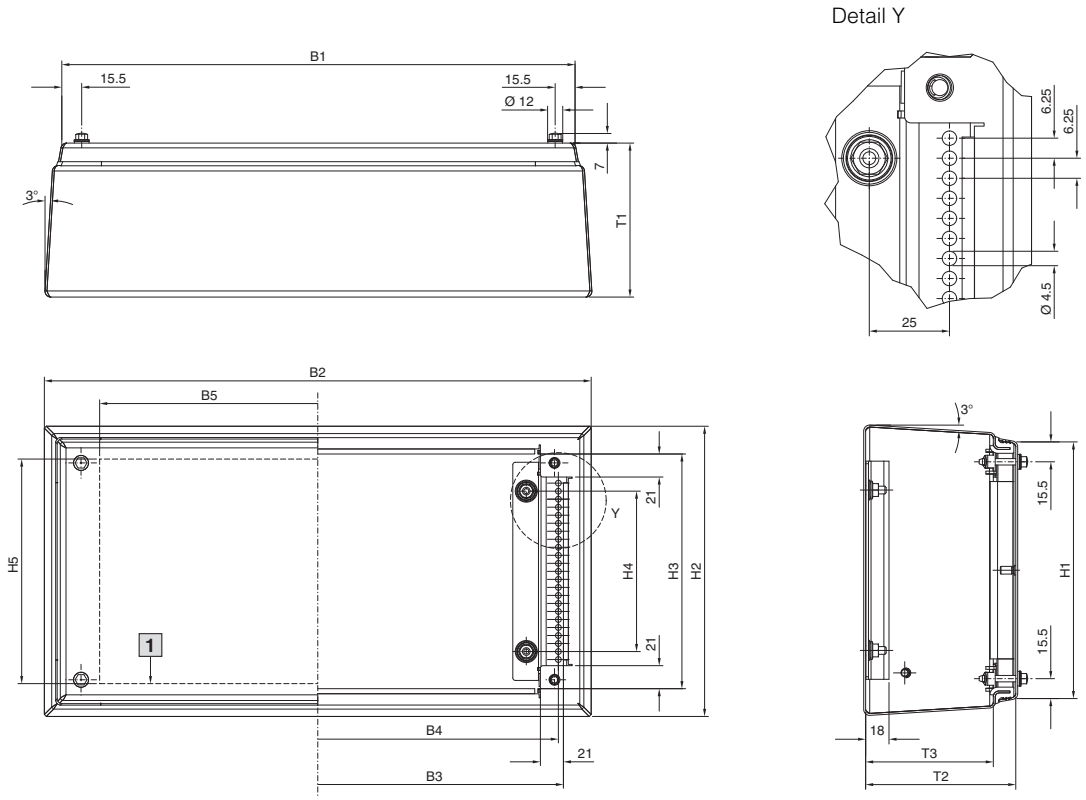

1 Max. installation area, cover

Model No. HD	Width dimensions mm					Height dimensions mm					Depth dimensions mm		
	B1	B2	B3	B4	B5	H1	H2	H3	H4	H5	T1	T2	T3
1670.600	150	171.3	138.2	125	90	150	171.3	138.2	75	125	80	77	59.5
1671.600	150	176.2	138.2	125	90	150	176.2	138.2	75	125	120	117	99.5
1672.600	200	226.2	188.2	175	140	200	226.2	188.2	125	175	120	117	99.5
1674.600	300	326.2	288.2	275	240	200	226.2	188.2	125	175	120	117	99.5
1675.600	400	426.2	388.2	375	340	200	226.2	188.2	125	175	120	117	99.5
1676.600	400	426.2	388.2	375	340	300	326.2	288.2	225	275	120	117	99.5

B1 = Overall width
B2 = Overall width bottom
B3 = Clearance width
B4 = Distance of system punchings
B5 = Max. installation width of cover

H1 = Overall height top
H2 = Overall height bottom
H3 = Clearance height
H4 = Distance of fastening bolts
H5 = Max. installation height of cover

T1 = Overall depth
T2 = Clearance depth of enclosure cover
T3 = Clearance depth of enclosure

Hygienic Design

Compact enclosures HD, single-door

Catalogue 33, page 177

HD 1302.600, HD 1306.600, HD 1307.600,
HD 1308.600, HD 1310.600, HD 1320.600

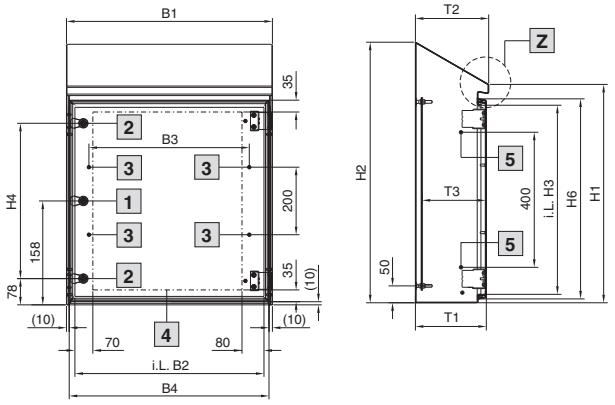

HD 1316.600, HD 1317.600

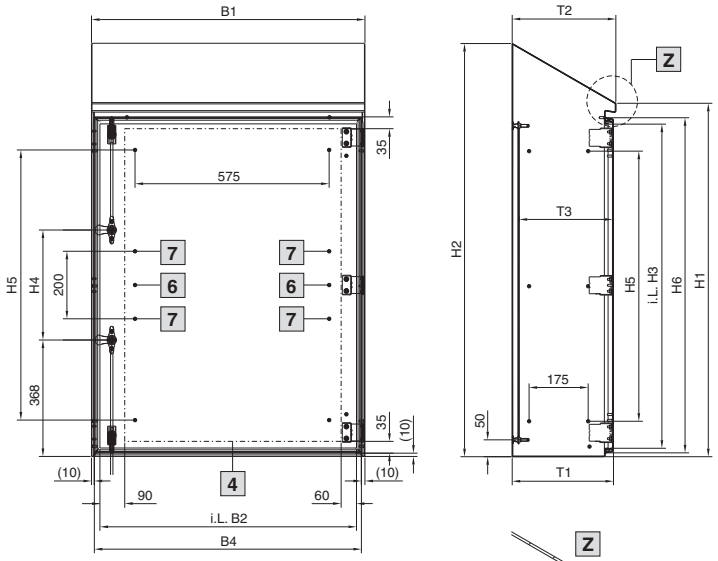

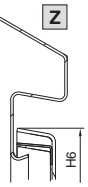

1 For HD 1302.600

2 For HD 1306.600, HD 1307.600, HD 1308.600, HD 1310.600, HD 1320.600

3 For HD 1307.600, HD 1308.600, HD 1310.600

4 Max. installation area, door

5 For HD 1308.600, HD 1310.600

6 For HD 1316.600

7 For HD 1317.600

i.L. = Clearance width

HD 1317.600

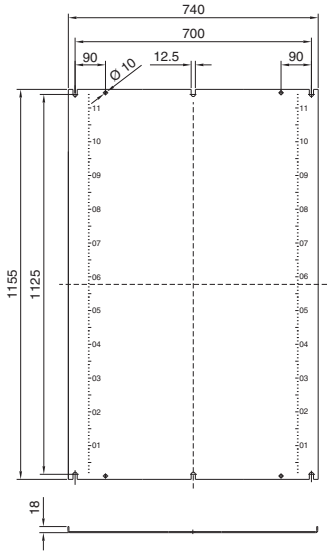

HD 1316.600

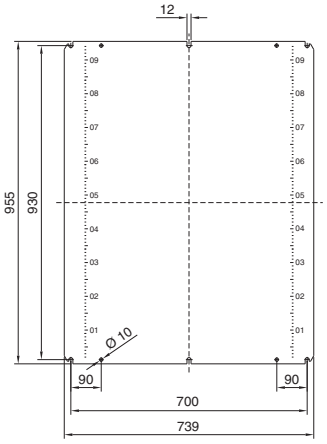

HD 1306.600, HD 1307.600, HD 1308.600, HD 1310.600, HD 1320.600

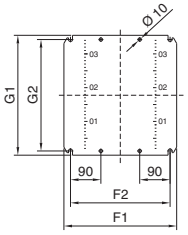

HD1302.600

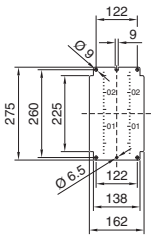

Mounting plate

F1 = Mounting plate width
F2 = Separation width of attachment holes

G1 = Mounting plate height
G2 = Separation width of attachment holes

Enclosure

B1 = Overall width
B2 = Clearance width of enclosure
B3 = Separation width of threaded bolts on the door
B4 = Width of door

H1 = Enclosure height, front
H2 = Enclosure height, rear
H3 = Clearance height of enclosure
H4 = Spacing between fasteners
H5 = Separation height of threaded bolts on the door
H6 = Height of door

T1 = Depth between rear panel and door
T2 = Overall depth
T3 = Possible mounting depth (mounting plate assembly)

Model No. HD	Width dimensions mm				Height dimensions mm						Depth dimensions mm			Mounting plates mm				Material thickness mm		
Stainless steel	B1	B2	B3	B4	H1	H2	H3	H4	H5	H6	T1	T2	T3	F1	F2	G1	G2	Enclosure	Door	Mounting plate
1302.600	220	170	–	200	350	437	260	–	–	293	155	162	113 – 130	–	–	–	–	1.5	1.5	2.0
1306.600	390	340	–	370	430	549	340	240	–	373	210	217	168 – 185	334	295	355	330	1.5	1.5	2.0
1307.600	510	460	375	490	550	669	460	360	–	493	210	217	168 – 185	449	410	470	445	1.5	1.5	2.5
1308.600	390	340	275	370	650	769	560	460	–	593	210	217	168 – 185	334	295	570	545	1.5	1.5	2.5
1310.600	610	560	475	590	650	769	560	460	–	593	210	217	168 – 185	549	510	570	545	1.5	2.0	2.5
1316.600	810	760	–	790	1050	1221	960	280	800	993	300	307	258 – 275	–	–	–	–	1.5	2.0	3.0
1317.600	810	760	–	790	1250	1421	1160	480	1000	1193	300	307	258 – 275	–	–	–	–	1.5	2.0	3.0
1320.600	610	560	–	590	430	601	340	240	–	373	300	307	258 – 275	549	510	355	330	1.5	1.5	2.5

Switch housings

Catalogue 33, page 182

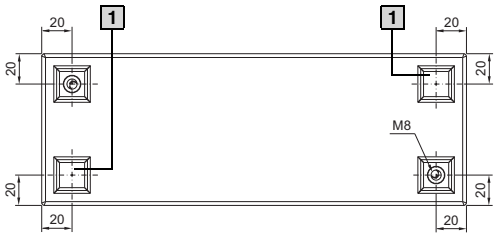



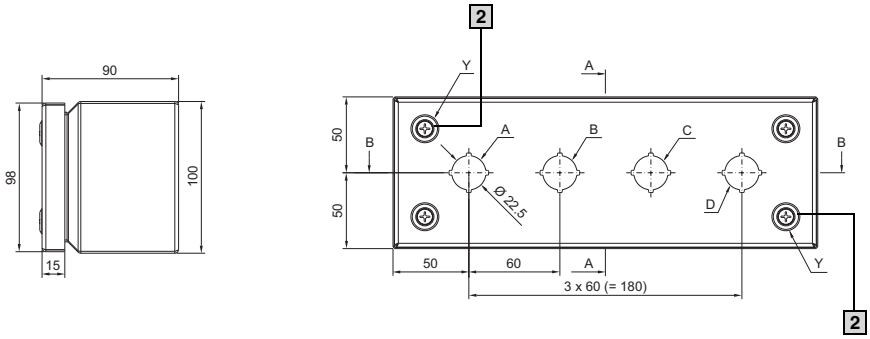

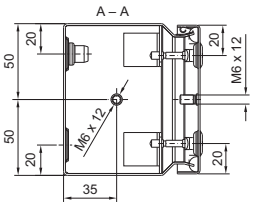

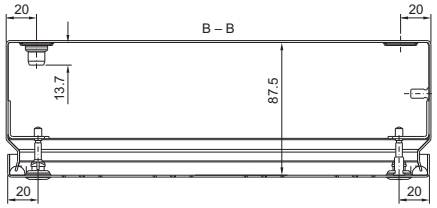

Model No. SM	B1	B2	Punchings
2384.010	100	98	A
2384.020	160	158	A, B
2384.030	220	218	A, B, C
2384.040	280	278	A, B, C, D

1 Additional attachment possible

2 Does not apply to SM 2384.010

Stainless steel

Bus enclosures BG

Catalogue 33, page 183

BG 1558.010, BG 1559.010

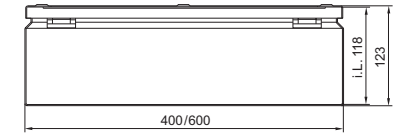

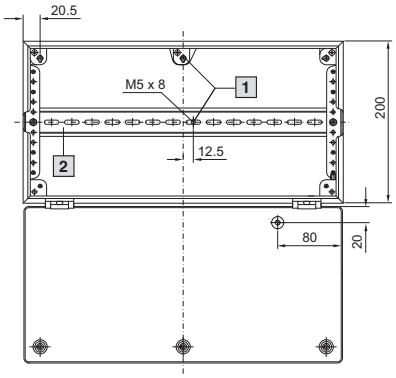

BG 1583.010, BG 1584.010, BG 1585.010



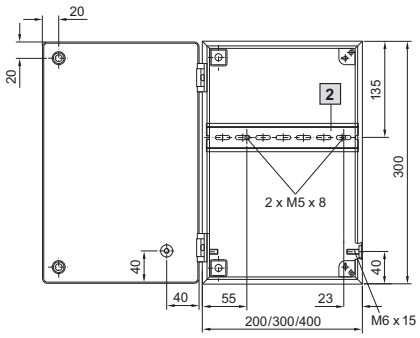

1 Only for BG 1559.010
2 Support rail TS 35/7.5

Compact enclosures AE

Stainless steel Catalogue 33, page 184

AE 1001.X00 – AE 1016.X00

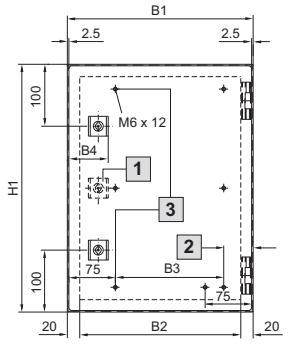

1 For AE 1001.X00, AE 1002.X00, AE 1003.X00, AE 1004.X00, AE 1005.X00, AE 1006.X00, AE 1009.X00, AE 1011.X00 only one cam lock in the centre and without central bolt

2 50 for AE 1001.X00, AE 1002.X00

3 Do not apply to AE 1001.X00, AE 1002.X00

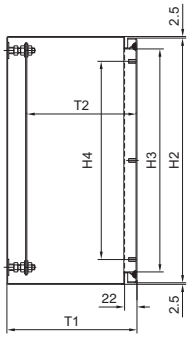

Mounting plates AE 1001.X00, AE 1002.X00

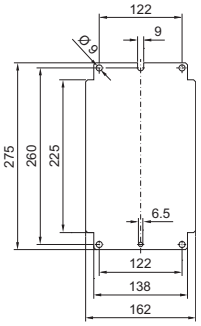

AE 1003.X00 – AE 1016.X00

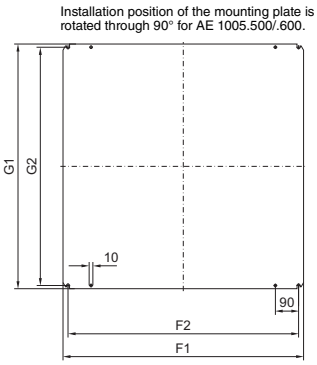

AE 1017.X00

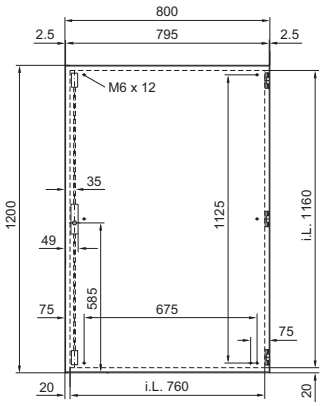

AE 1018.X00 (AE 1019.X00)

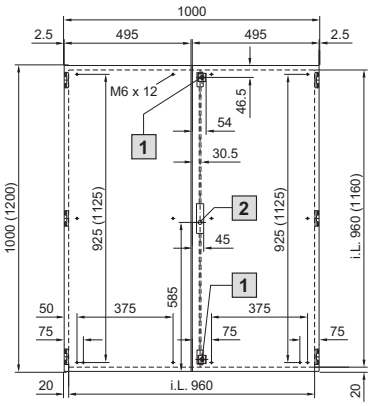

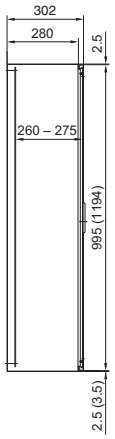

1 Cam for AE 1018.X00

2 Locking rod for AE 1019.X00

i.L. = Clearance width

Mounting plates AE 1018.X00

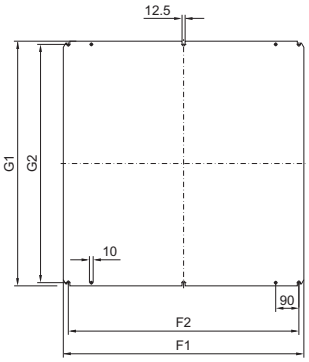

AE 1017.X00 (AE 1019.X00)

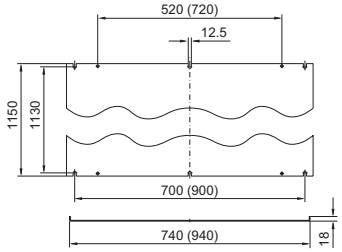

Dimensions in brackets for AE 1019.X00.

Model No. AE	Width dimensions mm				Height dimensions mm				Depth dimensions mm		Mounting plates mm				Material thickness mm		
Stainless steel	B1	B2	B3	B4	H1	H2	H3	H4	T1	T2	F1	F2	G1	G2	Enclosure	Door	Mounting plate
1001.X00	200	167	–	56	300	295	274	225	122	100	–	–	–	–	1.25	1.5	2.0
1002.X00	200	167	–	56	300	295	274	225	157	135	–	–	–	–	1.25	1.5	2.0
1003.X00	300	260	175	66	300	295	260	225	212	168 – 184	254	215	275	250	1.38	1.5	2.0
1004.X00	380	340	250	66	300	295	260	225	157	113 – 129	334	295	275	250	1.38	1.5	2.0
1011.X00	380	340	250	66	300	295	260	225	212	168 – 184	334	295	275	250	1.38	1.5	2.0
1005.X00	300	260	175	66	380	375	340	275	212	168 – 184	334	295	275	250	1.38	1.5	2.0
1006.X00	380	340	250	66	380	375	340	275	212	168 – 184	334	295	355	330	1.38	1.5	2.0
1015.X00	400	360	275	66	500	495	460	425	212	168 – 184	354	315	475	450	1.38	1.5	2.0
1007.X00	500	460	375	66	500	495	460	425	212	168 – 184	449	410	470	445	1.38	2.0	2.5
1013.X00	500	460	375	66	500	495	460	425	302	258 – 274	449	410	470	445	1.50	2.0	2.5
1008.X00	380	340	250	66	600	595	560	525	212	168 – 184	334	295	570	545	1.38	1.5	2.5
1009.X00	600	560	475	66	380	375	340	275	212	168 – 184	549	510	355	330	1.38	1.5	2.5
1010.X00	600	560	475	66	600	595	560	525	212	168 – 184	549	510	570	545	1.38	2.0	2.5
1012.X00	600	560	475	66	760	755	720	675	212	168 – 184	549	510	730	705	1.38	2.0	3.0
1014.X00	760	720	625	66	760	755	720	675	302	258 – 274	704	665	730	705	1.50	2.0	3.0
1016.X00	800	760	675	66	1000	955	960	925	302	258 – 274	739	700	955	930	1.50	2.0	3.0
1017.X00	800	–	–	–	1200	–	–	–	302	–	–	–	–	–	1.50	2.0	3.0
1018.X00	1000	–	–	–	1000	–	–	–	302	–	939	900	955	930	1.50	2.0	3.0
1019.X00	1000	–	–	–	1200	–	–	–	302	–	–	–	–	–	1.50	2.0	3.0

Stainless steel

Compact enclosure AE, protection category IP 69K

Catalogue 33, page 187

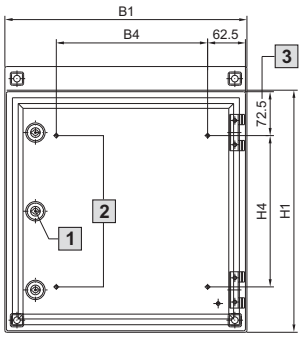

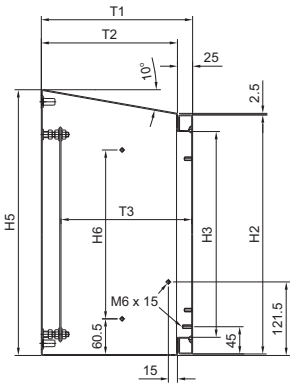

AE 1101.120 –
AE 1101.140

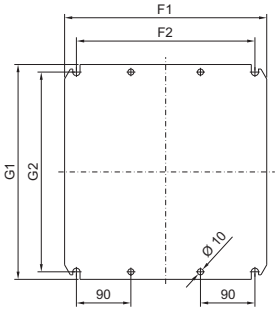

AE 1101.110

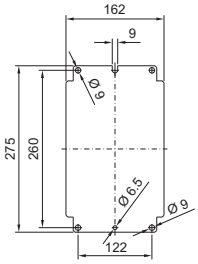

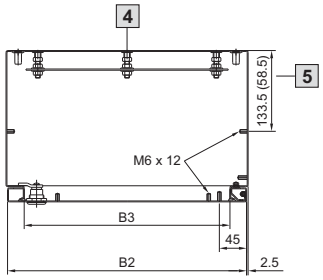



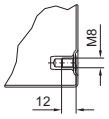

1 For AE 1101.110/.120 one cam lock

2 Do not apply to AE 1101.110

3 75 for AE 1101.110

4 For AE 1101.110 only one mounting plate attachment at the top

5 58.5 for AE 1101.110

Model No. AE	B1	B2	B3	B4	H1	H2	H3	H4	H5	H6	T1	T2	T3	F1	F2	G1	G2
1101.110	230	225	170	–	330	325	270	175	352	209	155	130	135	–	–	–	–
1101.120	400	395	340	250	400	395	340	250	439	279	250	225	208 – 224	334	295	355	330
1101.130	400	395	340	250	650	645	590	500	689	529	250	225	208 – 224	334	295	570	545
1101.140	650	645	590	500	650	645	590	500	689	529	250	225	208 – 224	549	510	570	545

Premium Panel, protection category IP 69K

Catalogue 33, page 188

Operating housing

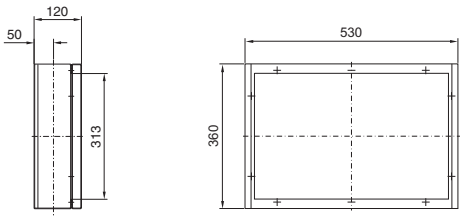

Hex screw, exposed

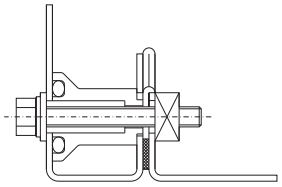

Internal screw with plastic stoppers

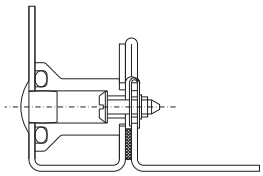

Support arm connection at the bottom, by rotating the enclosure.

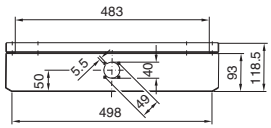

Stainless steel

Command panel housing with door

Catalogue 33, page 189

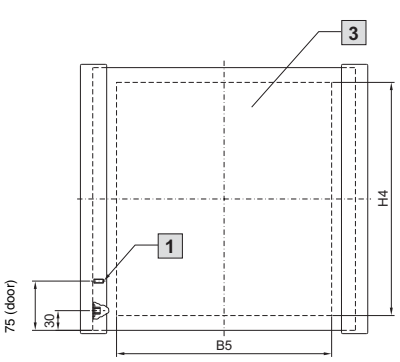

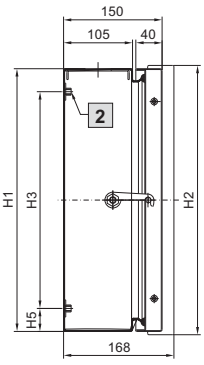

1 Welded nuts M6 x 15

2 Welded nuts M8 x 30

3 Max. cut-out B5 x H4

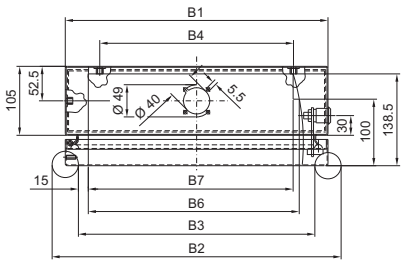

Model No. CP	6535.010	6536.010	6538.010	6539.010
Width (B1) mm	300	400	400	600
Height (H1) mm	300	300	400	400
Depth (T1) mm	150	150	150	150
B2 = Enclosure width with handle strips	340	440	440	640
B3 = Clearance opening, front	260	360	360	560
B4 = Spacing of mounting plate attachment	215	295	295	510
B5 = Max. front cut-out, width	225	325	325	525
B6 = Hinged width for depth 100 mm	220	320	320	520
B7 = Hinged width for depth 118 mm	206	310	310	510
H2 = Enclosure height with handle strips	310	310	410	410
H3 = Spacing of mounting plate attachment	250	250	330	330
H4 = Max. front cut-out, height	255	255	355	355
H5 = Distance from base – mounting plate attachment	25	25	35	35

Support arm system CP-S

Enclosure attachment CP-S, stainless steel Catalogue 33, page 191

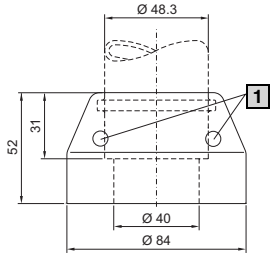

Mounting cut-out for pedestal, bottom

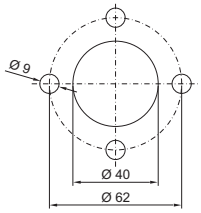

Mounting cut-out, enclosure

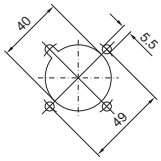

1 Clamping screw

Housing coupling CP-S stainless steel Catalogue 33, page 191

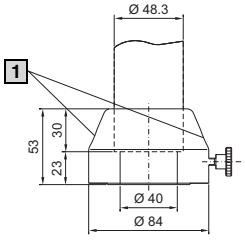

Mounting cut-out, enclosure

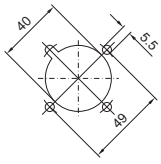

1 Clamping screw

Support arm system CP-S

Wall/base mount, rigid
CP-S stainless steel Catalogue 33, page 191

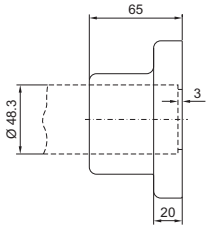

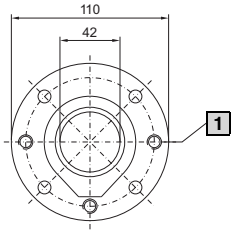

1 Adjusting screw

Mounting cut-out

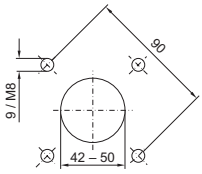

Base mount, rotating Catalogue 33, page 191

Rear attachment CP 6663.500

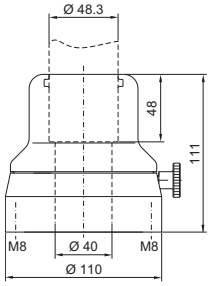

Mounting cut-out

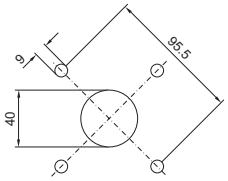

Front attachment CP 6663.400

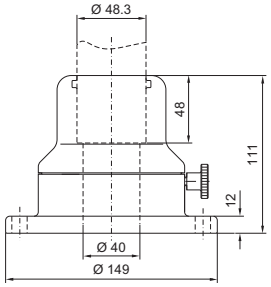

Mounting cut-out

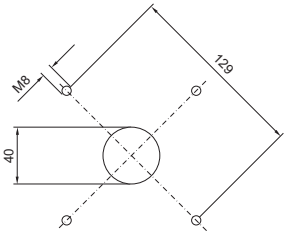

Wall console Catalogue 33, page 191

Rear attachment

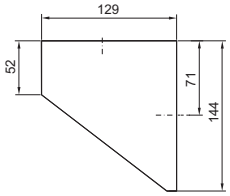

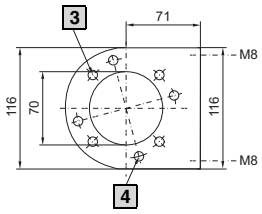

3 Hole for CP 6663.000

Mounting cut-out

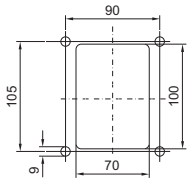

4 Hole for CP 6663.500

Front fastening

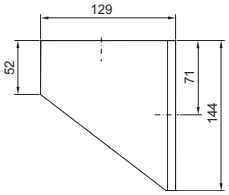

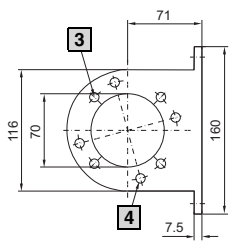

Mounting cut-out

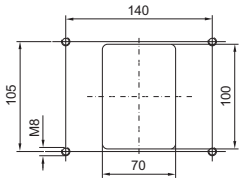

Tilting adaptor 10° Catalogue 33, page 191

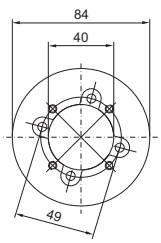

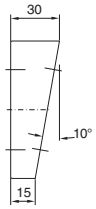

Mounting cut-out enclosure

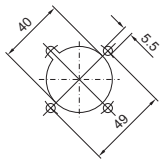

Stainless steel

One-piece consoles AP

Stainless steel Catalogue 33, page 192

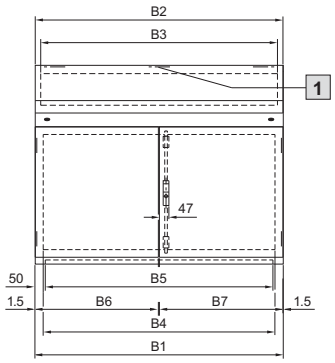

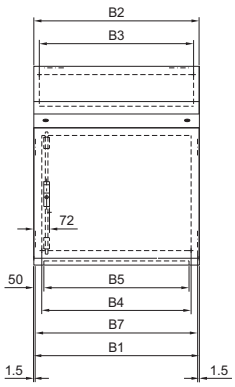

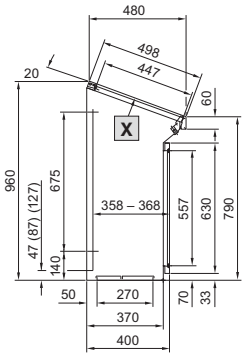

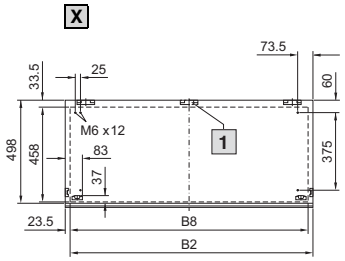

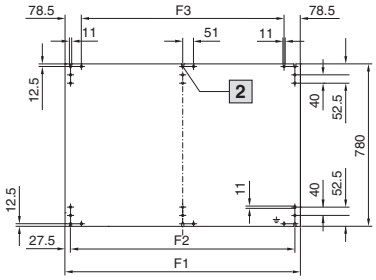

1 Hinge only for AP 2686.600

2 Does not apply to AP 2683.600/ AP 2684.600

X Cover, interior view

Model No. AP, stainless steel	**2683.600**	**2684.600**	**2685.600**	**2686.600**
Width (B1) mm	600	800	1000	1200
Height mm	960			
Depth mm	400/480			
B2 = Width	597	797	997	1197
B3 = Clearance width, top	544	744	944	1144
B4 = Clearance width, front	524	724	924	1124
B5 = Clearance width, bottom	500	700	900	1100
B6 = Width adjacent door	–	–	495	595
B7 = Width lockable door	597	797	497	597
B8 = Punched length	500	700	900	1100
F1 = Mounting plate width	530	730	930	1130
F2 = Distance between mounting holes	475	675	875	1075
F3 = Distance between mounting holes	373	573	773	973

PC enclosure systems

Catalogue 33, page 193

With keyboard drawer

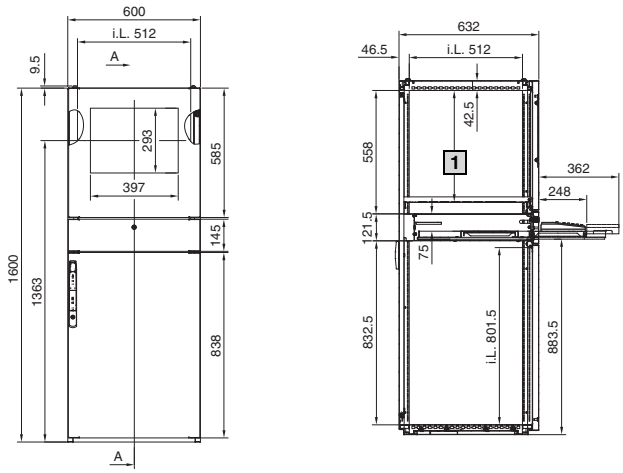

1 Max. 504,5 adjustable on a 25 mm pitch pattern

				Model No. PC
				4650.100
			Width mm	600
			Height mm	1600
			Depth mm	632
Supply includes	**Design**	**Material**	**Surface finish/Colour**	
Enclosure	Solid top and sides, open at the bottom	Stainless steel, 1.5 mm	Brushed, grain 400	■
	Gland plates, three-part	Stainless steel, 1.5 mm		
Rear door	With locking rod and double-bit insert, hinged on the r/h side	Stainless steel, 2.0 mm	Brushed, grain 400	■
Glazed door, top	Latched from the inside[1)], r/h hinge	Stainless steel, 1.5 mm	Brushed, grain 400	■
	Viewing window	Toughened safety glass 4.0 mm		
Component shelf	Slotted, permanently installed	Sheet steel, 1.5 mm	RAL 7015	■
Drawer	Enclosure	Sheet steel, 1.25 mm	RAL 7035	■
	Keyboard extension piece with cable support, plus pull-out mousepad	Sheet steel, 1.5 mm	RAL 7035	
	Trim panel, folded as handrest, with fastener, lock no. 3524 E	Stainless steel, 1.25 mm	Brushed, grain 400	
	[1)] With unlatching for top glazed door			■
Bottom door	With locking rod and double-bit insert, hinged on the r/h side	Stainless steel, 1.5 mm	Brushed, grain 400	■

Ex enclosures KEL

Stainless steel, with screw-fastened cover

Catalogue 33, page 198

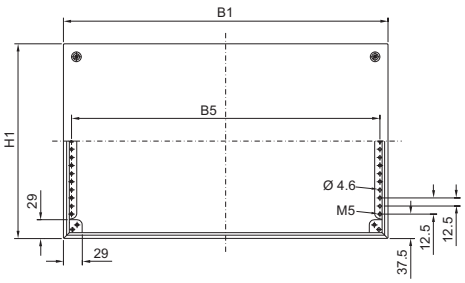

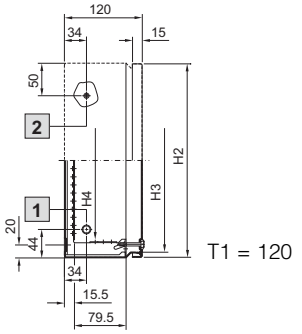

T1 = 120

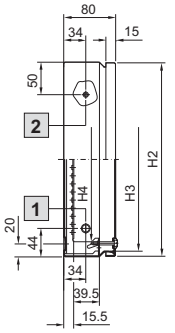

T1 = 80

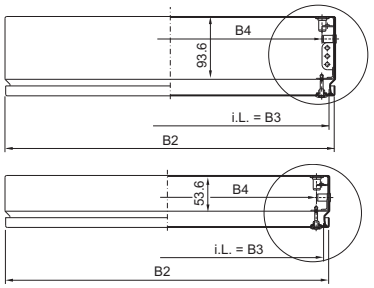

X
T1 = 120

Y
T1 = 80

i.L. = Clearance width

Detail X, T1 = 120

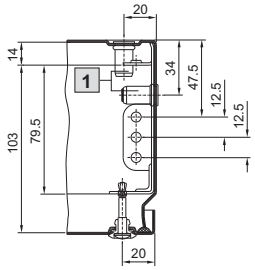

Detail Y, T1 = 80

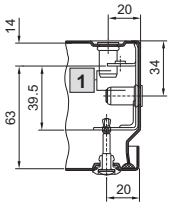

1 Blind threaded bush with internal thread M8 x 12

2 Earthing bolts M8 x 20

Model No. KEL	9301.000	9302.000	9303.000	9304.000	9305.000	9306.000
Width (B1) mm	150	300	200	300	400	300
Height (H1) mm	150	150	200	200	200	300
Depth (T1) mm	80	80	80	80	120	120
B2 = Cover width	148	298	198	298	398	298
B3 = Clearance opening width	132	282	182	282	382	282
B4 = Clearance width between profile strips	109	259	159	259	359	259
B5 = Hole-centre distance of profile strips	125	275	175	275	375	275
H2 = Lid height	148	148	198	198	198	298
H3 = Clearance opening height	132	132	182	182	182	282
H4 = Clearance height between profile strips	100	100	150	150	150	250

Stainless steel, with hinged door

Catalogue 33, page 198

KEL 9401.600 – KEL 9409.600

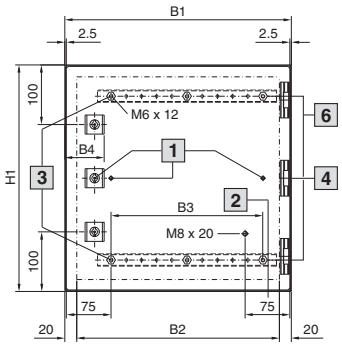

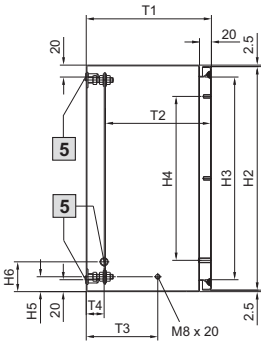

1 Where H1 = 300/380 only one cam lock in the centre and without bolts in the centre

2 50 for KEL 9401.600

3 Not applicable to KEL 9401.600

4 Only KEL 9408.600

5 Blind threaded bush M8

6 Horizontal section for enclosures ≥ 600 mm

Mounting plates

KEL 9401.600

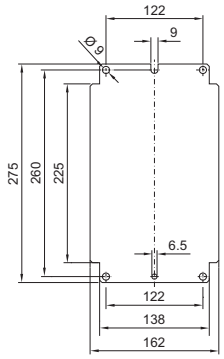

Detail rear view

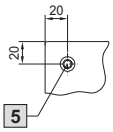

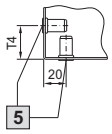

KEL 9402.600 – KEL 9409.600

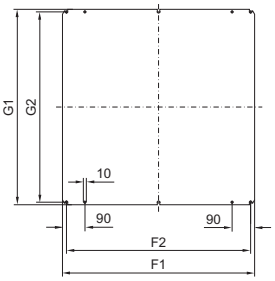

Installation position of the mounting plate is rotated through 90° for KEL 9409.600.

Model No. KEL	Dimensions of enclosures mm														Dimensions of mounting plate mm				Material thicknesses in mm		
	B1	B2	B3	B4	H1	H2	H3	H4	H5	H6	T1	T2	T3	T4	F1	F2	G1	G2	Enclosure	Door	Mounting plate
9401.600	200	160	–	56	300	295	274	225	20	50	155	135	60	30	–	–	–	–	1.25	1.5	2.0
9402.600	380	340	250	66	300	295	260	225	25	50	155	113 –129	75	30	334	295	275	250	1.38	1.5	2.0
9409.600	300	260	175	66	380	375	340	275	25	50	210	168 –184	120	60	334	295	275	250	1.38	1.5	2.0
9403.600	380	340	250	66	380	375	340	275	42.5	50	210	168 –184	120	30	334	295	355	330	1.38	1.5	2.5
9404.600	380	340	250	66	600	595	560	525	25	50	210	168 –184	120	30	334	295	570	545	1.38	1.5	2.5
9405.600	600	560	500	66	600	595	560	525	27.5	50	210	168 –184	120	30	549	510	570	545	1.38	2.0	2.5
9406.600	600	560	500	66	760	755	720	675	27.5	50	210	168 –184	120	30	549	510	730	705	1.38	2.0	3.0
9407.600	760	720	600	66	760	755	720	675	27.5	50	300	258 –274	120	30	704	665	730	705	1.50	2.0	3.0
9408.600	800	760	600	66	1000	995	960	925	35	50	300	258 –274	120	30	739	700	955	930	1.50	2.0	3.0

Ex enclosures KEL

Plastic

Catalogue 33, page 199

KEL 9201.600, KEL 9202.600
with only one cam lock in the centre

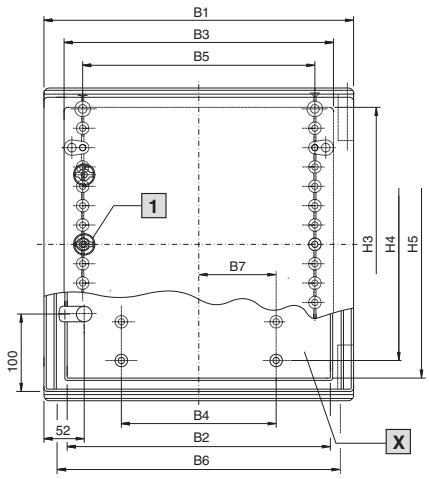

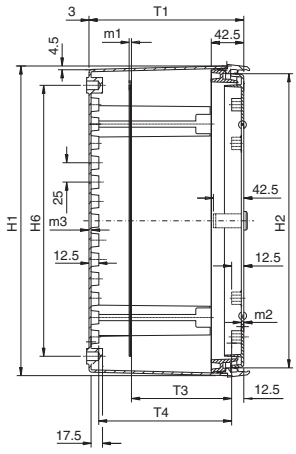

Mounting plate

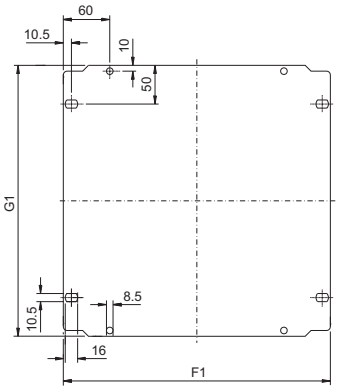

B6 = Separation width for wall mounting hole

H6 = Separation height for wall mounting hole

1 Only for KEL 9201.600, KEL 9202.600

X Door interior view

Model No. KEL	Width dimensions mm							Height dimensions mm						Depth dimensions mm			Material thickness mm			Mounting plates mm	
	B1	B2	B3	B4	B5	B6	B7	H1	H2	H3	H4	H5	H6	T1	T3	T4	m1	m2	m3	F1	G1
9201.600	200	140	150	–	100	150	25	300	280	256	200	245	250	150	80 – 110/117	119	2.0	3.0	3.0	145	250
9202.600	250	190	200	75	150	200	50	350	330	306	250	295	300	150	80 – 110/117	119	2.0	3.0	3.0	195	300
9203.600	300	240	249	100	200	250	50	400	380	355	300	345	350	200	80 – 160/167	169	2.0	3.0	3.0	245	350
9204.600	400	340	348	200	300	350	100	400	380	354	300	345	350	200	80 – 159/166	168.5	2.5	3.2	3.2	345	350
9205.600	400	340	348	200	300	350	100	600	580	554	500	545	550	200	80 – 158/165	168	2.5	3.5	3.5	345	550
9206.600	600	540	548	400	500	550	200	600	580	554	500	545	550	200	80 – 158/165	168	2.5	3.5	3.5	545	550
9207.600	500	440	434	300	400	450	150	500	480	454	400	445	450	300	80 – 258/265	268	2.5	3.5	3.5	417	450

Plastic

Catalogue 33, page 199

KEL 9208.600, KEL 9209.600

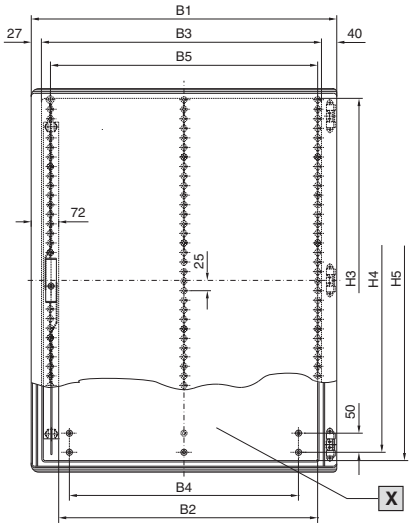

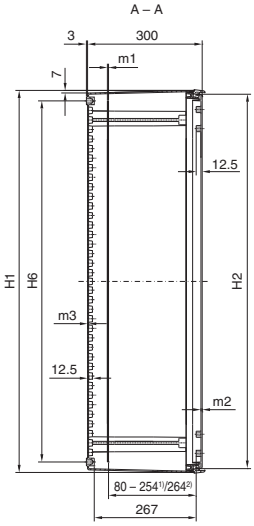

Mounting plate

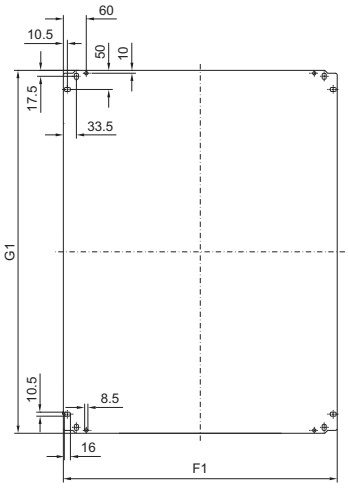

X Door interior view

1) Infinite with mounting plate depth adjustment KS 1491.000

2) When mounting on studs directly on the washer in front of the threaded insert

B6 = Separation width Wall mounting hole

H6 = Separation height Wall mounting hole

Model No. KEL	Width dimensions mm						Height dimensions mm						Material thickness mm			Mounting plates mm	
	B1	B2	B3	B4	B5	B6	H1	H2	H3	H4	H5	H6	m1	m2	m3	F1	G1
9208.600	600	485	533	400	500	550	800	780	753	700	740	750	3	3.7	3.7	517	750
9209.600	800	685	733	600	700	750	1000	980	953	900	940	950	3	3.7	4.0	717	950

Outdoor enclosures

CS wall-mounted enclosures

Catalogue 33, page 204

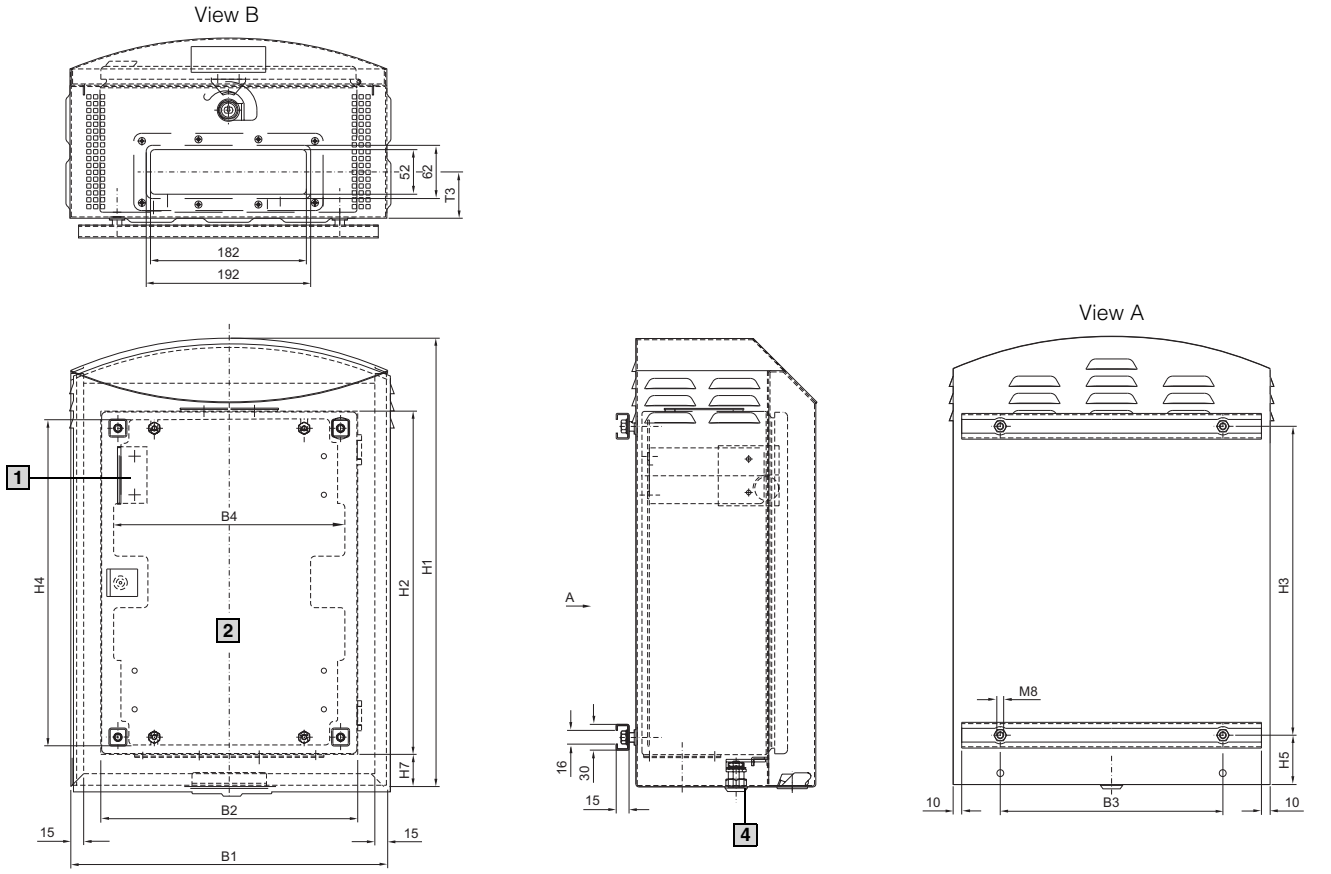

B1 = Width of outer enclosure
B2 = Width of inner enclosure
B3 = Centre-to-centre spacing attachment C rail/interior enclosure
Centre-to-centre spacing for accommodation of the wall mounting bracket
B4 = Width of mounting plate

H1 = Height of outer enclosure
H2 = Height of inner enclosure
H3 = Centre-to-centre spacing attachment C rail/interior enclosure
Centre-to-centre spacing for accommodation of the wall mounting bracket
H4 = Height of mounting plate
H5 = Distance from outer enclosure to C rail attachment/internal enclosure
H7 = Distance from outer enclosure to inner enclosure

T1 = Depth of outer enclosure
T2 = Depth of inner enclosure
T3 = Distance from outer enclosure to centre of bottom gland plate
T4 = Distance from outer enclosure to centre of top gland plate

1 Supply includes: Mounting bracket for thermostat SK 3110.000

2 Supports mounting of the mounting plate in the inner enclosure and inner door

3 Roof cut-out, interior enclosure with gland plate
CS 9791.015/.025/.035 W 97.5 x D 65.5
CS 9791.045 W 302.0 x D 122.0

4 Lock SZ 2749.000 with lock insert (from B1 = 630 mm, 2 locks)

Enclosure	Width dimensions mm				Height dimensions mm						Depth dimensions mm			
Model No. CS	B1	B2	B3	B4	H1	H2	H3	H4	H5	H7	T1	T2	T3	T4
9791.015	370	300	260	270	522.5	400	360	380	57.5	37.5	210	170	55.5	72.5
9791.025	420	350	310	320	560.5	440	400	410	58	38	210	170	55.5	72.5
9791.035	530	460	420	430	700	565	525	535	63	43	265	220	82	72.5
9791.045	630	580	540	550	780	580	540	550	55	35	380	333	82	155

CS New Basic enclosures

Catalogue 33, page 205

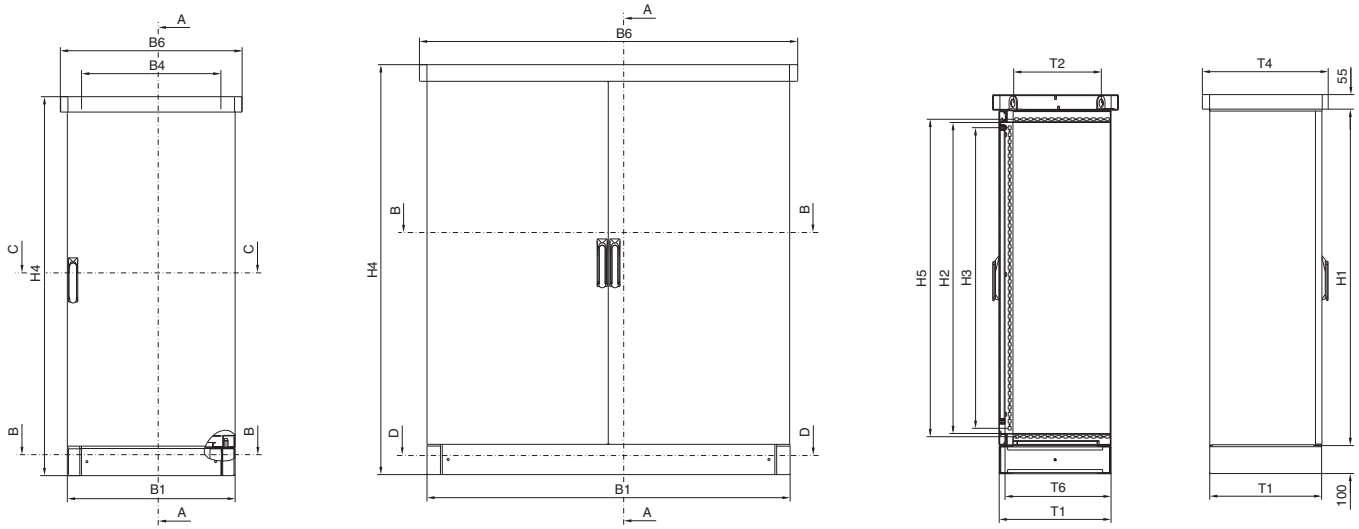

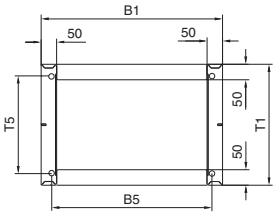

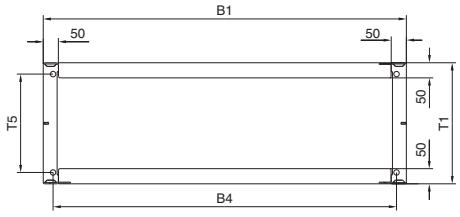

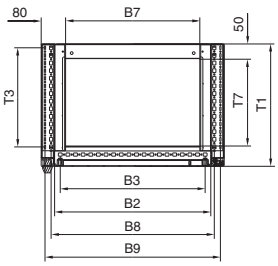

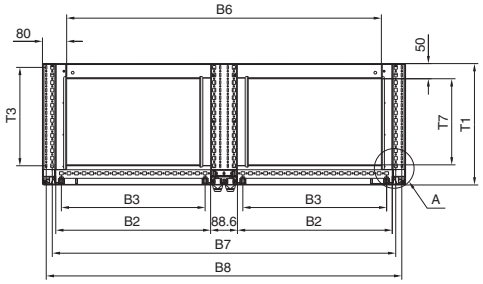

B1 = Width of basic enclosure/standard base/plinth
B2 = Clearance of enclosure frame
B3 = Section length of system punchings
B4 = Centre-to-centre distance between eyebolts
B5 = Hole distance base/plinth – base mount
B6 = Width of roof (overall width)
B7 = Clearance of standard base/plinth opening
B8 = System punchings
B9 = System punchings
H1 = Height of basic enclosure
H2 = Clearance of enclosure frame
H3 = Section length of system punchings
H4 = Overall height
H5 = System punchings
T1 = Depth of basic enclosure/standard base/plinth
T2 = Centre-to-centre distance between eyebolts
T3 = Section length of system punchings
T4 = Roof depth (overall depth)
T5 = Hole distance base/plinth – base mount
T6 = Maximum mounting depth
T7 = Clearance of standard base/plinth opening

B4 = Hole distance base/plinth – base mount
B7 = System punchings

Enclosure	Width dimensions mm									Height dimensions mm					Depth dimensions mm						
Model No. CS	B1	B2	B3	B4	B5	B6	B7	B8	B9	H1	H2	H3	H4	H5	T1	T2	T3	T4	T5	T6	T7
9783.540	600	512	475	498	535	650	440	535	575	800	712	675	955	735	400	313	325	450	325	376	284.5
9783.550	600	512	475	498	535	650	440	535	575	1200	1112	1075	1355	1135	400	313	325	450	325	376	284.5
9783.530	600	512	475	498	535	650	440	535	575	1200	1112	1075	1355	1135	500	413	425	550	425	476	384.5
9783.510	800	712	675	698	735	850	640	735	775	800	712	675	955	735	400	313	325	450	325	376	284.5
9783.520	800	712	675	698	735	850	640	735	775	1200	1112	1075	1355	1135	400	313	325	450	325	376	284.5
9783.610	800	712	675	698	735	850	640	735	775	1200	1112	1075	1355	1135	500	413	425	550	425	476	384.5
9784.520	1200	1112	1075	1135	1250	1040	1135	1175	–	1200	1112	1075	1355	1135	400	313	325	450	325	376	284.5
9784.620	1200	512	475	1135	1250	1040	1135	1175	–	1200	1112	1075	1355	1135	400	313	325	450	325	376	284.5
9784.540	1200	1112	1075	1135	1250	1040	1135	1175	–	1200	1112	1075	1355	1135	500	413	425	550	425	476	384.5
9784.640	1200	512	475	1135	1250	1040	1135	1175	–	1200	1112	1075	1355	1135	500	413	425	550	425	476	384.5

Outdoor enclosures

CS Toptec

Catalogue 33, page 207

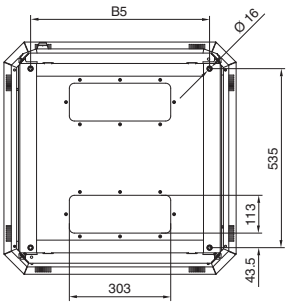

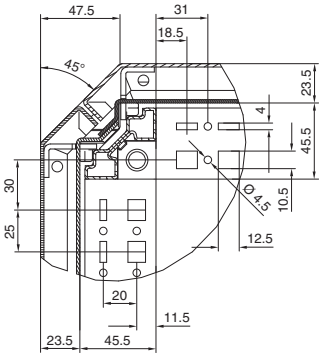

Detail X

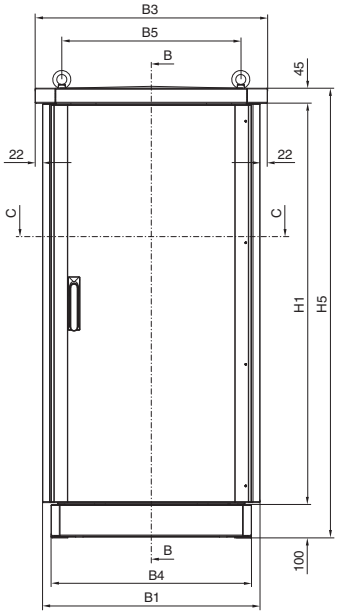

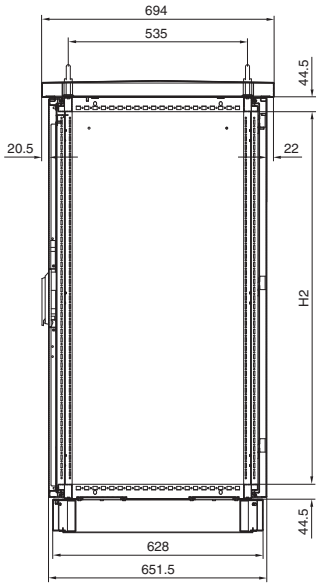

Section B – B

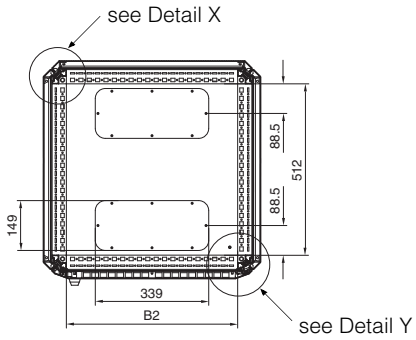

Section C – C

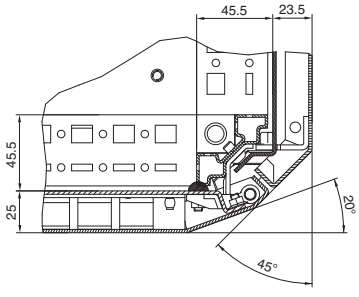

Detail Y

Enclosure	Nominal dimensions mm			Width dimensions mm					Height dimensions mm		
Model No. CS	W (B)	H	D (T)	B1	B2	B3	B4	B5	H1	H2	H5
9774.105	600	1200	600	650	512	694	599	535	1199	1112	1344
9774.205	800	1200	600	850	712	894	799	735	1199	1112	1344
9774.305	600	1600	600	650	512	694	599	535	1599	1512	1744
9774.405	800	1600	600	850	712	894	799	735	1599	1512	1744

CS modular enclosures

Catalogue 33, page 208, 209

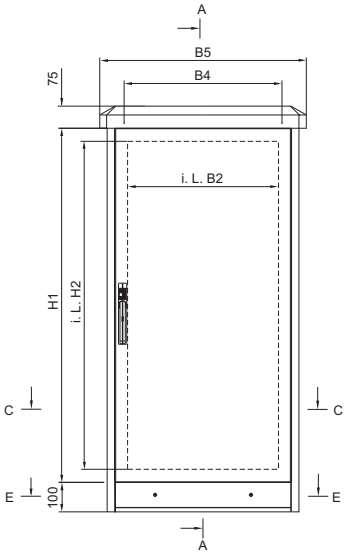

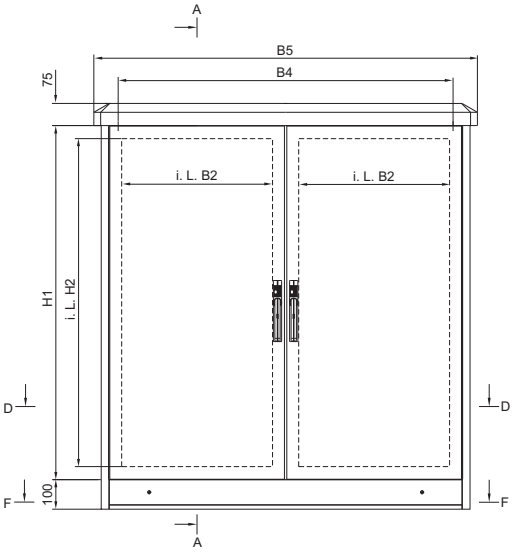

Section A – A

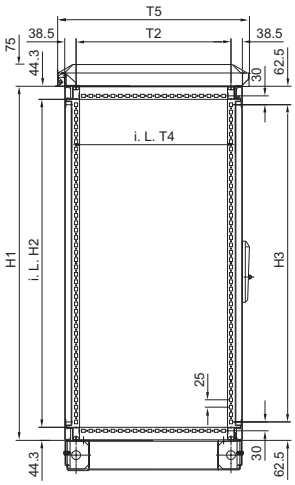

Section E – E

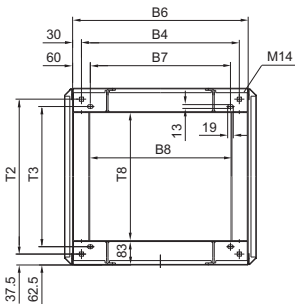

Section F – F

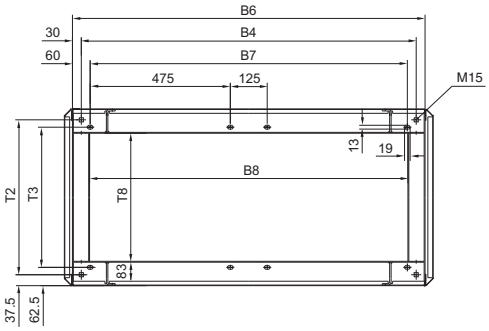

Cross-section

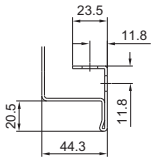

Section C – C

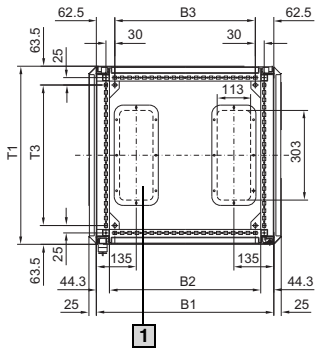

Section D – D

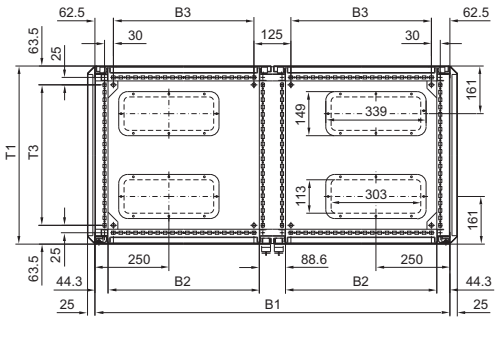

Pitch pattern of holes

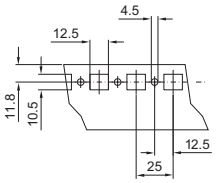

1 From an enclosure width of 800 mm
4 gland plates

Enclosure	Width dimensions mm										Height dimensions mm			Depth dimensions mm							
Model No. CS	B1	B2	B3	B4	B5	B6	B7	B8	B9	B10	H1	H2	H3	T1	T2	T3	T4	T5	T6	T7	T8
9751.015	600	512	475	535	700	595	475	479	494	500	800	712	675	600	525	475	554	650	445	500	434
9751.075	600	512	475	535	700	595	475	479	494	500	1000	912	875	500	425	375	454	550	345	400	334
9751.025	600	512	475	535	700	595	475	479	494	500	1200	1112	1075	600	525	475	554	650	445	500	434
9751.035	600	512	475	535	700	595	475	479	494	500	1600	1512	1475	600	525	475	554	650	445	500	434
9751.085	800	712	675	735	900	795	675	679	694	700	1000	912	875	500	425	375	454	550	345	400	334
9751.045	800	712	675	735	900	795	675	679	694	700	1200	1112	1075	500	425	375	454	550	345	400	334
9751.055	800	712	675	735	900	795	675	679	694	700	1200	1112	1075	600	525	475	554	650	445	500	434
9751.065	800	712	675	735	900	795	675	679	694	700	1600	1512	1475	600	525	475	554	650	445	500	434
9752.015	1200	512	475	1135	1300	595	1075	1079	1094	500	1200	1112	1075	500	425	375	454	550	345	400	334
9752.025	1200	512	475	1135	1300	595	1075	1079	1094	500	1200	1112	1075	600	525	475	554	650	445	500	434

Outdoor enclosures

CS modular enclosures

Catalogue 33, page 208, 209

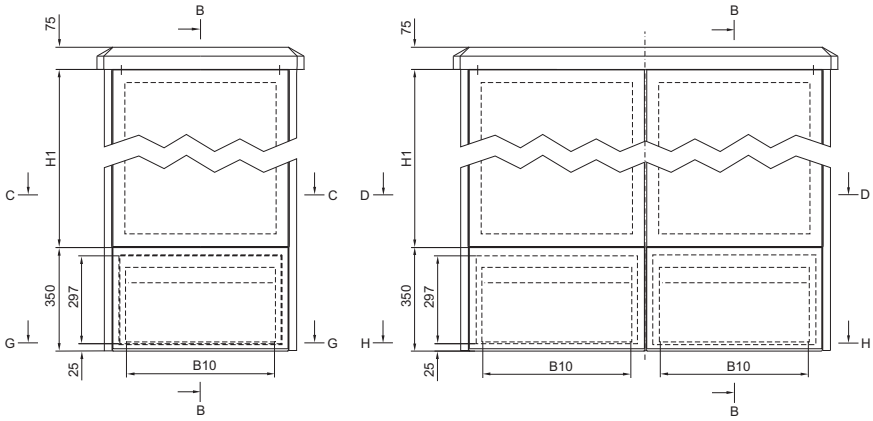

Section B – B

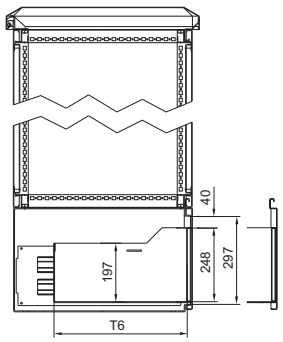

Section G – G

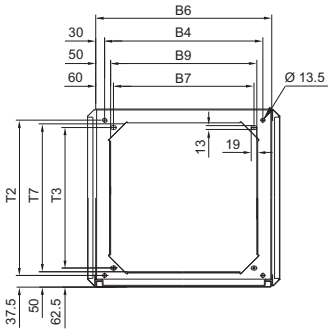

Section H – H

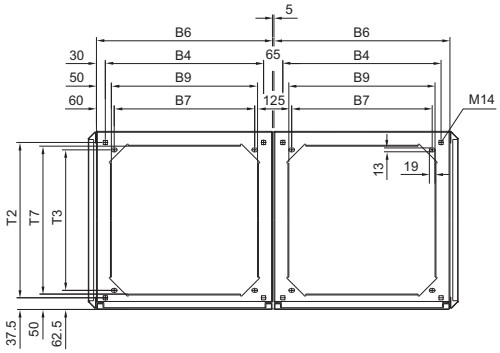

B1 = Width of basic enclosure
B2 = Clearance of enclosure frame
B3 = Section length of system punchings
B4 = Centre-to-centre distance between eyebolts
Hole distance base/plinth – base mount
B5 = Width of roof (overall width)
B6 = Width of standard and battery base/plinth
B7 = Hole distance base/plinth – base mount
B8 = Clearance of standard base/plinth opening
B9 = Clearance of battery base/plinth opening
B10 = Clearance width of battery drawer

H1 = Height of basic enclosure
H2 = Clearance of enclosure frame
H3 = Section length of system punchings

T1 = Depth of basic enclosure
T2 = Centre-to-centre distance between eyebolts
Hole distance base/plinth – base mount
T3 = Section length of system punchings
Hole distance base/plinth – base mount
T4 = Maximum mounting depth
T5 = Roof depth (overall depth)
T6 = Clearance depth of battery drawer
T7 = Clearance of battery base/plinth opening
T8 = Clearance of standard base/plinth opening

Key to drawing for Ripac EASY Catalogue 33, page 212 – 215

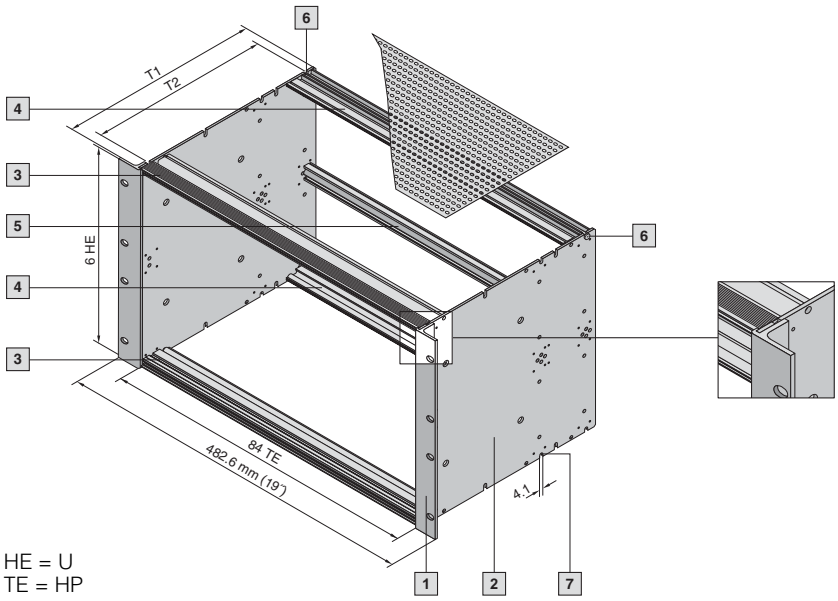

HE = U
TE = HP

Ripac Vario EMC 6 U taken as an example

T1	Side panel depth
T2	Mounting position depth
7	Attachment holes Ø 4.1 mm for screws M4

Horizontal rail configuration

3 U

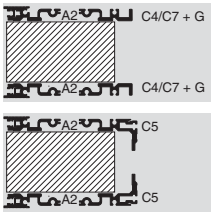

6 U

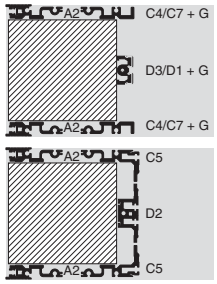

Top: for backplane
Bottom: for connectors

Ripac EASY 3 U, 6 U – scope of supply Catalogue 33, page 212 – 213

Height units U						**3**	**6**	Cat. 33, page
			T1 mm	T2 mm	Packs of			
2	Side panels		175	150	2	3634.695	3634.720	214
			235	210	2	3634.700	3634.725	
			295	270	2	3634.705	3634.730	
			355	330	2	3634.710	3634.735	
			415	390	2	3634.715	3634.740	
1		Flanges 3 U, with handle holes		3634.745	2	2	–	214
		Flanges 6 U, with handle holes		3634.750	2	–	2	
		Flanges 3 U, without handle holes		3634.746	2	2	–	
		Flanges 6 U, without handle holes		3634.751	2	–	2	
2		Side panels		see above	2	2	2	–
3	A2	Front horizontal rails front, incl. threaded inserts, screws		3634.600	2	2	2	214
4	C4	Rear horizontal rails, incl. screws, for conductive backplane		3634.615	2	2	2	214
	C7	Rear horizontal rails, incl. screws, for insulated backplane		3634.775	2	2	2	
	G	Insulating strips		3685.274	8	8	16	214
	C5	Rear horizontal rails with integral Z rails, incl. screws		3634.620	2	2	2	214
5	D3	Centre horizontal rails, incl. screws, for conductive backplane		3634.045	1	–	1	214
	D1	Centre horizontal rails, for insulated backplane		3684.582	1	–	1	214
	D2	Rear horizontal rails, centre, with integral Z rail, incl. screws		3634.085	1	–	1	214
6		Assembly screws M4 x 12 (pre-fitted)		3634.430	100	8	10	250

Parts for Ripac EASY

Side panels

For Ripac EASY Catalogue 33, page 214

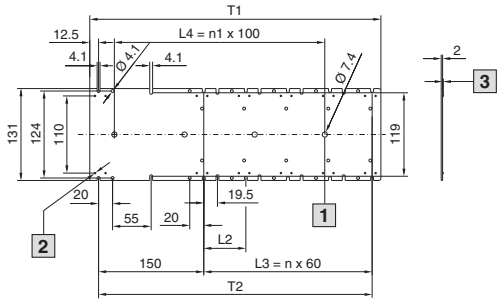

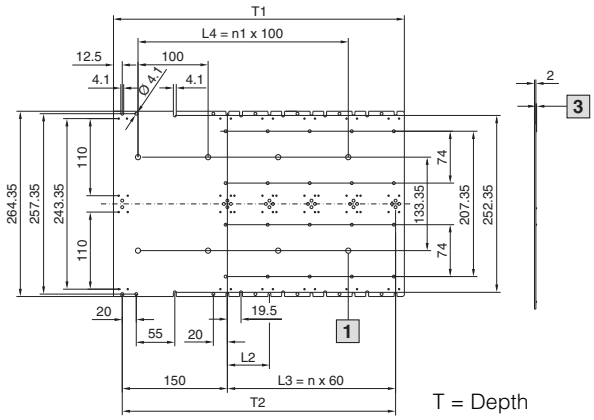

1 Drilled holes suitable for threaded inserts M4

2 Half shear, Ø 2 mm

3 Half shear height 1 mm

T1 mm	T2 mm	L2	n	n1
175	150	–	–	–
235	210	60	–	–
295	270	60	2	2
355	330	60	3	3
415	390	60	4	3

Flange, 482.6 mm (19˝)

For Ripac EASY Catalogue 33, page 214

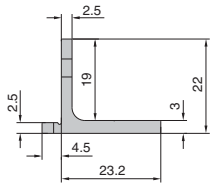

Covers

For Ripac EASY Catalogue 33, page 228

Covers version 1, slide-in:
The covers simply slide into the front and rear horizontal rails.

Covers version 2, slide-in/screw-fastening, for retrospective installation/removal:
In this application, additional horizontal rails are installed at the rear for panel mounting. Covers can be fitted over the horizontal rails for backplane/connector mounting.

The covers simply slide into the front horizontal rails and are screw-fastened to the rear horizontal rails for panel mounting.

Version 1

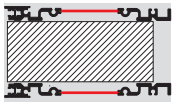

Version 2

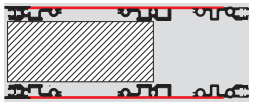

Horizontal rails

For Ripac EASY Catalogue 33, page 214

Front,
double screw fastening (A2)

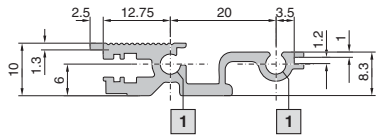

Rear,
for conductive backplane mounting,
double screw fastening (C4)

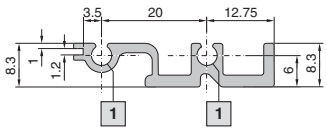

Rear,
with integral Z rail,
double screw fastening (C5)

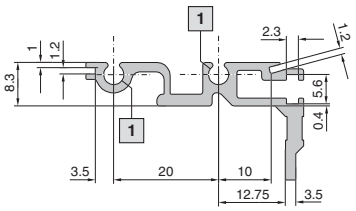

Rear,
for insulated backplane mounting,
double screw fastening (C7)

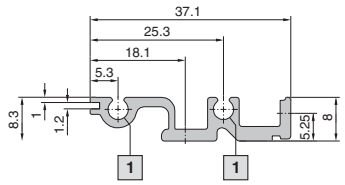

Rear, centre,
for insulated backplane mounting (D1)

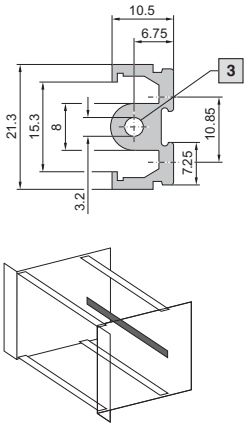

Rear, centre,
with integral Z rail (D2)

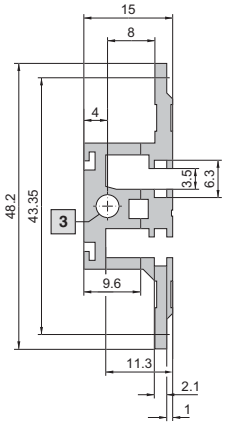

Rear, centre,
for insulated backplane mounting (D3)

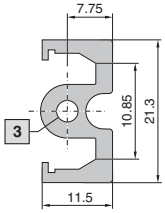

Rear,
for insulated backplane mounting,
double screw fastening (D4)

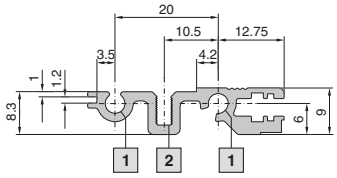

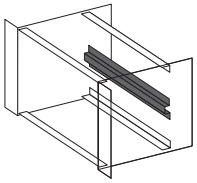

1 Core hole for thread M4
2 Screw channel for thread M3
3 On both end faces, thread M4

Adaptor for top-hat rail mounting

For Ripac EASY Catalogue 33, page 215

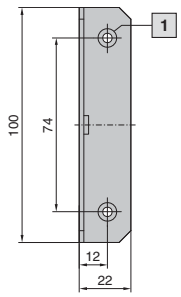

1 Threaded insert M4 (3x)

Subrack Ripac Vario

Key to all Ripac Vario drawings Catalogue 33, page 216

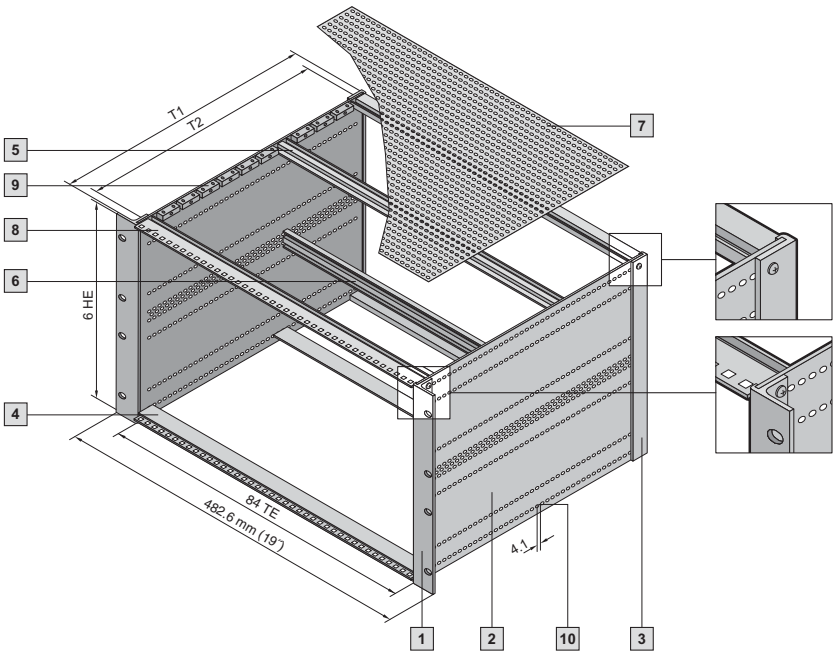

Ripac Vario EMC 6 U taken as an example

T1	Side panel depth
T2	Mounting position depth

Note:
Key, see page 127.

HE = U
TE = HP
T = Depth

Horizontal rail configuration Catalogue 33, page 247 – 249

Ripac Vario

3 U

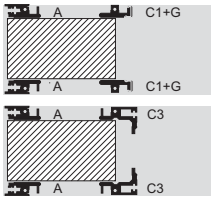

6 U

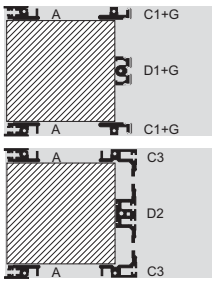

4 (3 + 1) U

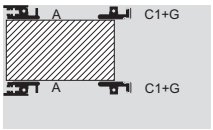

Ripac Vario EMC

3 U

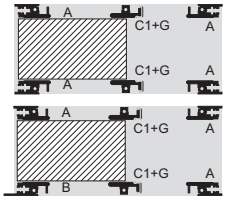

6 U

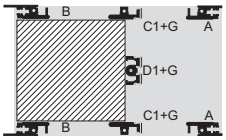

Ripac Vario, Ripac Vario EMC Catalogue 33, page 216 – 227

3 U

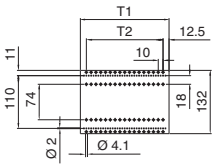

4 U (3 + 1)

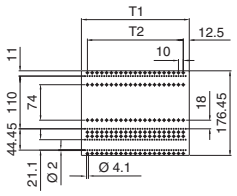

6 U

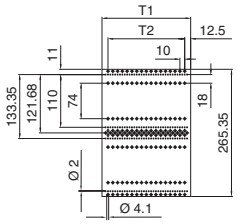

Ripac Vario, Ripac Vario EMC 3 U, 4 U, 6 U – scope of supply Catalogue 33, page 216 – 227

Height units U		T1 mm	T2 mm	Packs of	3	6	4 (3 + 1)	Cat. 33, page
2	Side panels	185	160	1	3684.511	3684.529	–	218, 220, 222
		225	200	1	3684.512	–	–	
		245	220	1	3684.513	3684.531	3685.850	
		285	260	1	3684.514	3684.532	–	
		305	280	1	3684.515	–	–	
		345	320	1	3684.516	3684.534	–	
		365	340	1	3684.517	3684.535	–	
		405	380	1	3684.518	–	–	

Subrack Ripac Vario

	PT		Model No.	Packs of	BP	C	BP	C	BP	Cat. 33, page
1		Flange without handle holes	–	1	3684.615		3684.617		3684.616	218, 220, 222
					2	2	2	2	2	
2		Side panels	see above	1	2	2	2	2	2	218, 220, 222
4	A	Horizontal rails, front	3684.562	1	2	2	2	2	2	220
	I	Threaded inserts	3650.310	2	2	2	2	2	2	220
5	C1	Horizontal rails, rear	3684.572	1	2	–	2	–	2	220
6	D1	Horizontal rails, rear, centre	3684.582	1	–	–	1	–	–	220
	G	Insulating strips 21 HP	3685.274	8	8	–	16	–	8	221
	C3	Horizontal rails, rear, with Z rails	3686.159	1	–	2	–	2	–	220
	D2	Rear horizontal rails, centre, with integral Z rails	3687.602	1	–	–	–	1	–	220
10		Assembly screws M4 x 12	3654.300	100	8	8	10	10	8	250

Subrack Ripac Vario EMC

	PT		Model No.	Packs of	BP	BP[1)]	BP	BP[1)]	BP[1)]	Cat. 33, page
1		Flange without handle holes	–	1	3684.615		3684.617		–	220
					2	2	2	2		
3		Trim sections, rear	–	2	3685.276		3685.277		–	221
					2	2	2	2		
2		Side panels	see above	1	2	2	2	2	–	218, 220, 222
		EMC gaskets, vertical	–	1	3686.975		3686.977		–	221
					4	4	4	4		
7		Covers, vented	see below	1	2	2	2	2	–	–
9		Mounting blocks	3684.234	10	Depending on depth					231
		Assembly screws M3 x 6	3684.233	100	3 per mounting block					250
	K	EMC gaskets for covers	3684.807	1	4	4	4	4	–	231
4	A	Horizontal rails, front	3684.562	1	4	3	4	2	–	220
	I	Threaded inserts	3650.310	2	4	4	4	4	–	220
8	B	Front horizontal rails with 10 mm extension	3684.567	1	–	1	–	2	–	220
5	C1	Horizontal rails, rear	3684.572	1	2	2	2	2	–	220
6	D1	Horizontal rails, rear, centre	3684.582	1	–	–	1	1	–	220
	G	Insulating strips 21 HP	3685.274	8	8	8	16	16	–	221
10		Assembly screws M4 x 12	3654.300	100	12	12	14	14	–	250

Covers for Ripac Vario EMC subracks

Height units U		T1 mm	Packs of	3	6	Cat. 33, page
7	Covers, vented	245	1	3684.695		229
		285	1	3684.696		
		305	1	3685.852		
		345	1	3684.698		
		405	1	3684.700		

BP = for backplane, C = for DIN connector, PT = rail type

[1)] Front horizontal rails with 10 mm extension for injector/extractor handles (B)

Parts for Ripac Vario

Side panels

For Ripac Vario, Ripac Vario EMC Catalogue 33, page 218, 220, 222, 224, 226

3 U

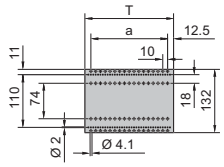

4 U (3 U + 1 U)

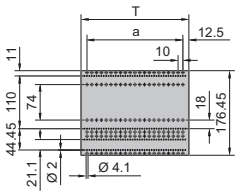

6 U

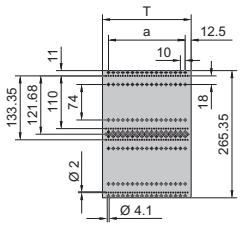

7 U (6 U + 1 U)

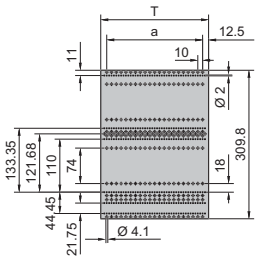

Depth (T) mm	a mm
185	160
225	200
245	220
285	260
305	280
345	320
365	340
405	380
425	400
465	440
525	500
585	560

Flange, 482.6 mm (19˝)

For Ripac Vario, Ripac Vario EMC Catalogue 33, page 218, 220, 222, 224, 226

Standard

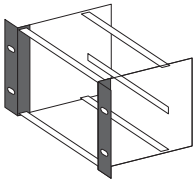

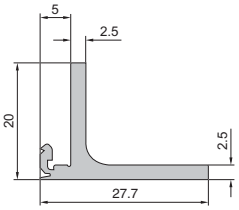

Recessed

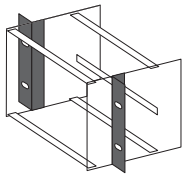

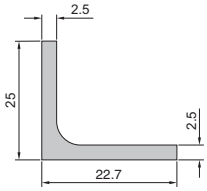

Trim section, rear

For Ripac Vario, Ripac Vario EMC Catalogue 33, page 218, 221, 223, 225, 227

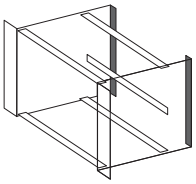

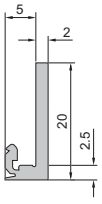

Front horizontal rails

For Ripac Vario, Ripac Vario EMC Catalogue 33, page 218, 220, 222, 224, 226

Front (A)

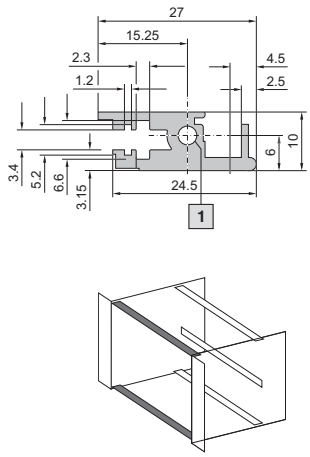

Front, with 10 mm extension,
for extractor handle type IV or VII (B)

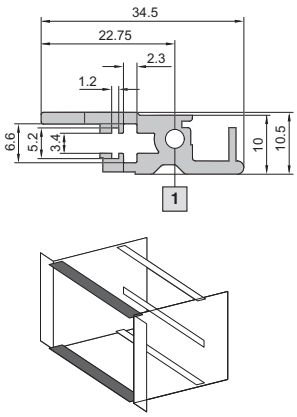

Front,
with double screw fastening (A1)

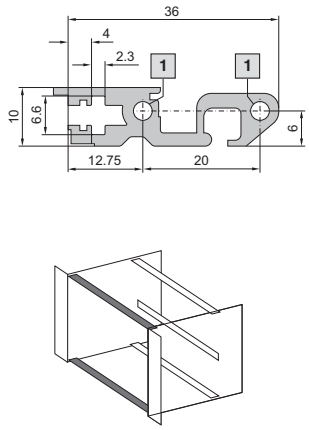

Front, with 10 mm extension,
with double screw fastening (B2)

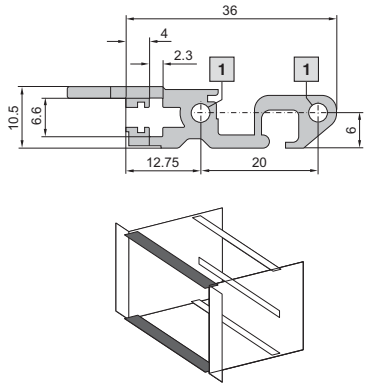

Front,
double, with double screw fastening
used to divide 6 U in 2 x 3 U (A3)

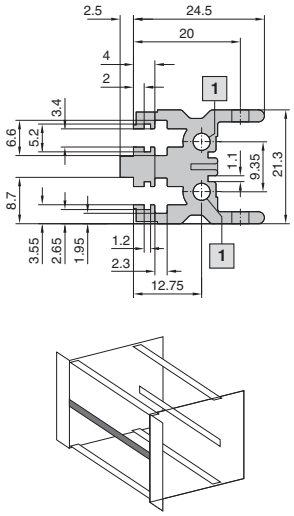

Front, with 10 mm extension,
double, with double screw fastening
used to divide 6 U in 2 x 3 U (A4)

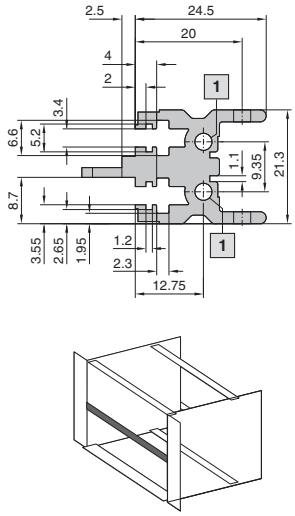

Front,
with 10 mm extension (B1)

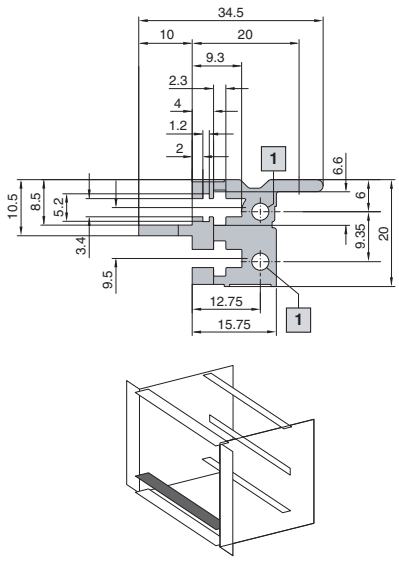

[1] On both end faces
Countersinking with thread M4 x 18

Parts for Ripac Vario and Ripac EASY

Rear horizontal rails

For Ripac Vario, Ripac Vario EMC Catalogue 33, page 218, 220, 222, 224, 226

Rear (C1)

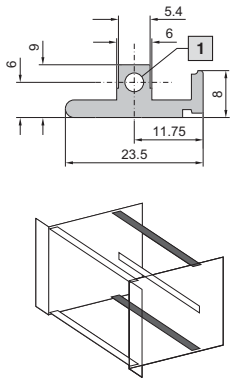

Rear,
with integral Z rail (C3)

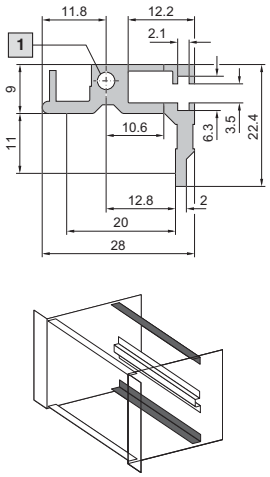

Rear,
with double screw fastening (C6)

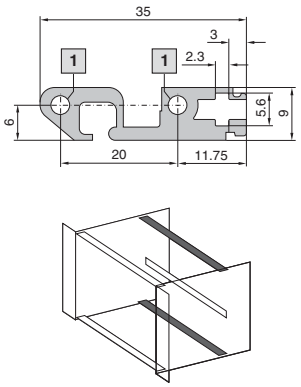

Rear, centre (D1)

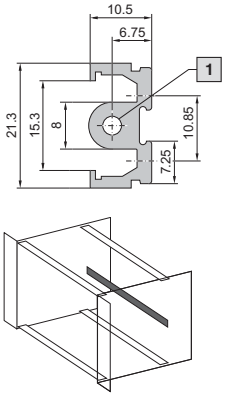

Rear, centre,
with integral Z rail (D2)

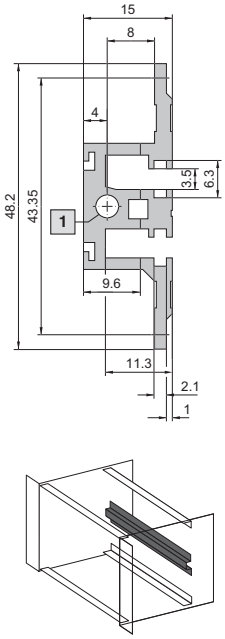

Conductive strip (H)
Insulating strip (G)



1 On both end faces, thread M4

Additional extrusions

For Ripac Vario, Ripac Vario EMC and Ripac EASY Catalogue 33, page 234

Rear adaptor rail, centre (E)

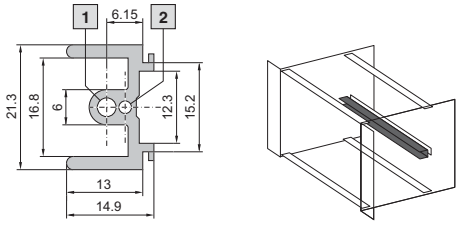

Z rail for connector
IEC 60 603-2 (F)

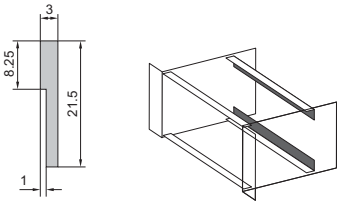

1 On both end faces, thread M4
2 On both end faces, thread M2.5

Front panels

For type I, II, IV, IVs or VII handles Catalogue 33, page 241, 242

Flat front panels

3 U

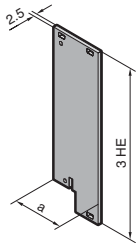

6 U

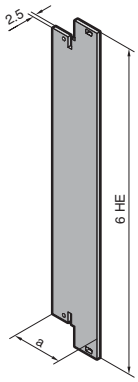

3 U

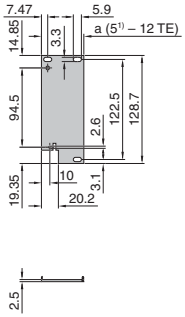

6 U

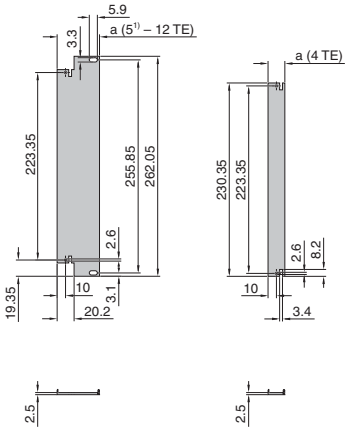

[1] 5.9 x 3.3 mm slot not contained in versions 5 – 7 HP.

U-channel front panels

3 U

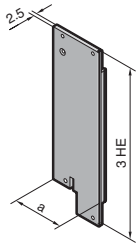

6 U

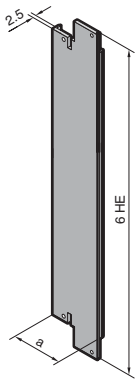

3 U

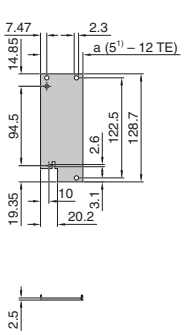

6 U

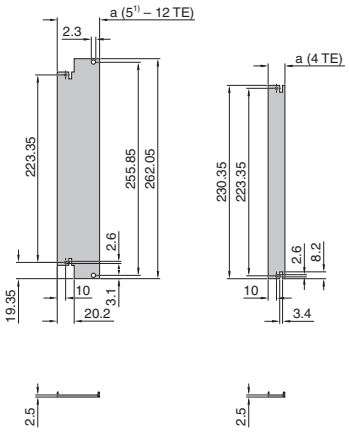

[1] 2.3 mm drilled hole not contained in versions 5 – 7 HP.

Table for flat front panels and U-channel front panels:

HP (TE)	4	5	6	7	8	10	12
a (mm)	20.0	25.1	30.1	35.2	40.3	50.5	60.6

Extractor handle

Front panel installation for top and bottom Catalogue 33, page 241

Type I

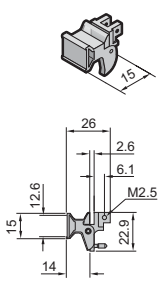

Type II

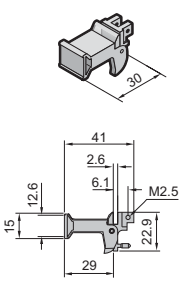

Accessories for subracks

Injector/extractor handle

Catalogue 33, page 241

	Type IV	Type IVs	Type VII plastic	Type VII metal
Front panel installation top	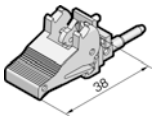	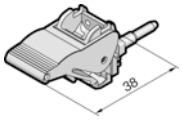	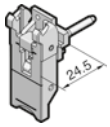	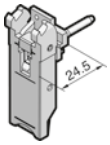
Front panel installation bottom	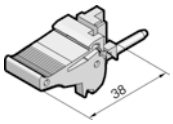	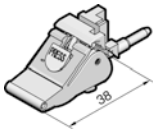	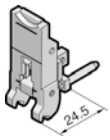	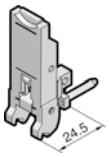
	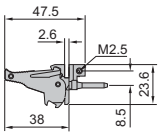	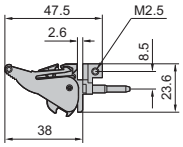	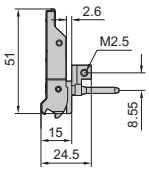	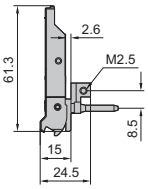

Micro-switch

with cable and connector Catalogue 33, page 242

1 Lever not depressed
2 Lever hinge
3 Lever contact point

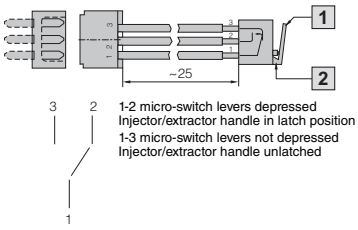

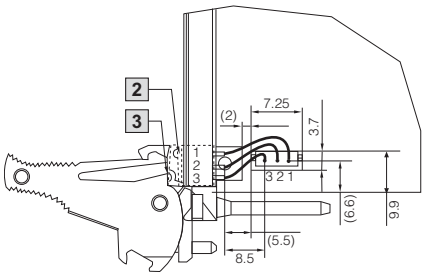

Front panels

For type V and VI handle Catalogue 33, page 243, 244

Flat front panels

3 U

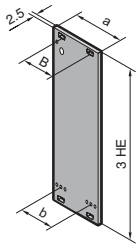

6 U

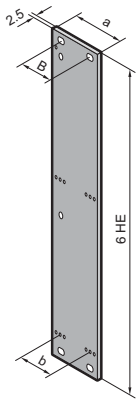

3 U

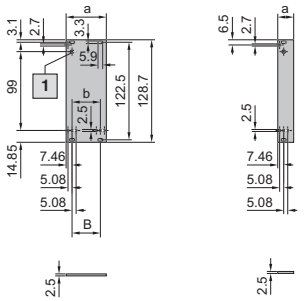

6 U

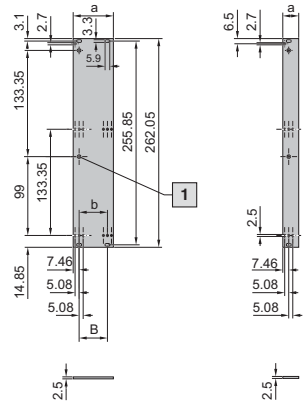

U-channel front panels

6 U

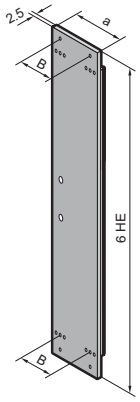

1 Countersinking for screw M2.5 (2x)

HE = U

6 U

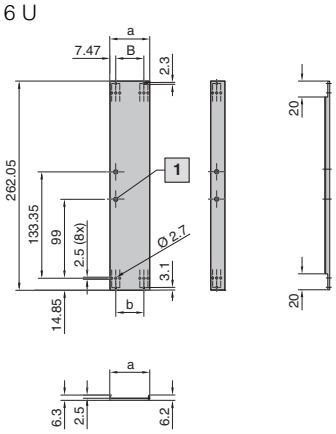

Table for flat front panels:

HP (TE)	4	5	6	7	8	10	12	14
a (mm)	20.0	25.1	30.1	35.2	40.3	50.5	60.6	70.8
B (mm)	–	–	–	–	–	35.6	45.7	55.9
b (mm)	–	–	15.2	20.3	25.4	35.6	45.7	55.9

Table for U-channel front panels:

HP (TE)	4	8	10
a (mm)	20.0	40.3	50.5
B (mm)	–	25.4	35.6
b (mm)	–	25.4	35.6

Handles

Catalogue 33, page 243

Type V
plastic

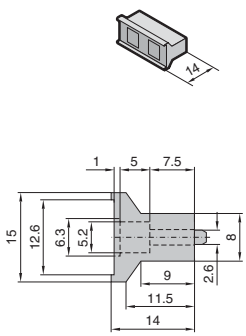

Type V
aluminium

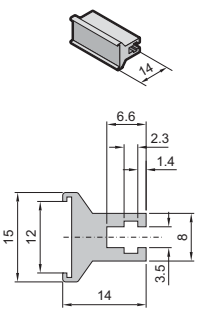

Type VI
aluminium

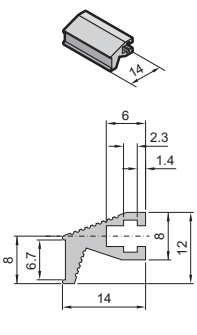

Accessories for subracks

Front panel assembly

Flat front panels 3 U, non-EMC, for type I, II, IV, IVs, VII handles Catalogue 33, page 241, 242

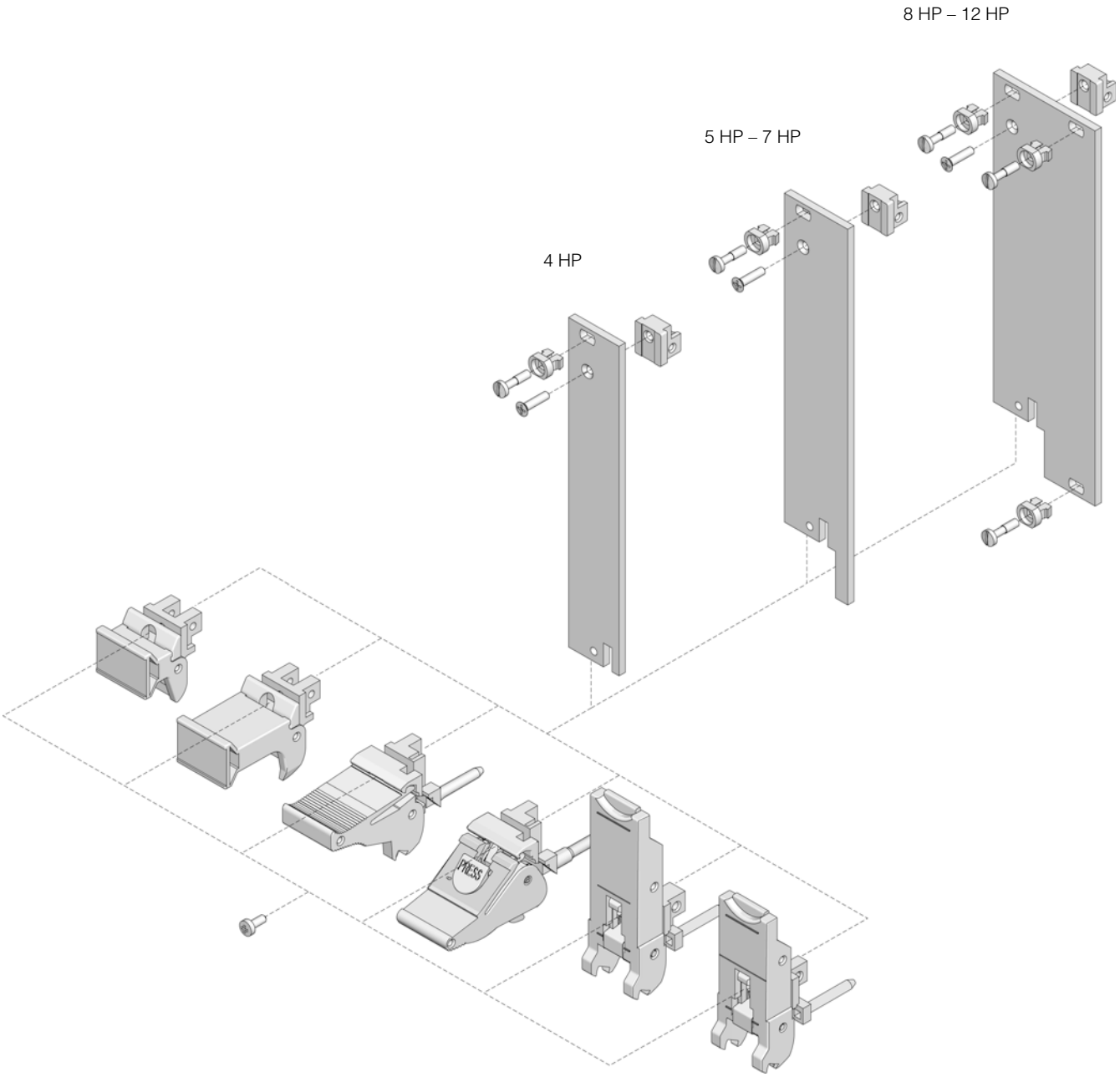

Front panel assembly

Flat front panels 6 U, non-EMC, for type I, II, IV, IVs, VII handles Catalogue 33, page 241, 242

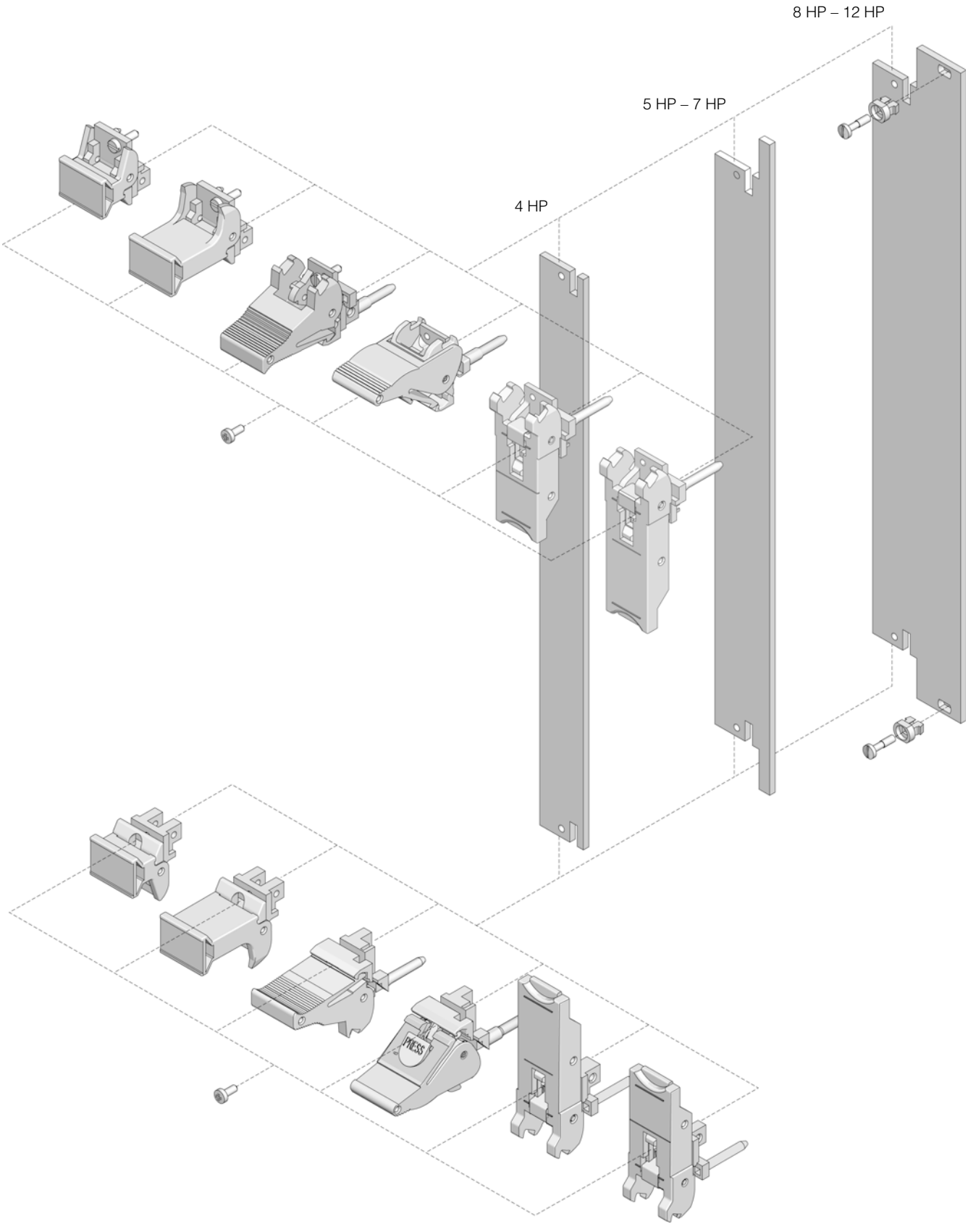

Accessories for subracks

Front panel assembly

U-channel front panels 3 U, EMC, for type I, II, IV, IVs, VII handles Catalogue 33, page 241, 242

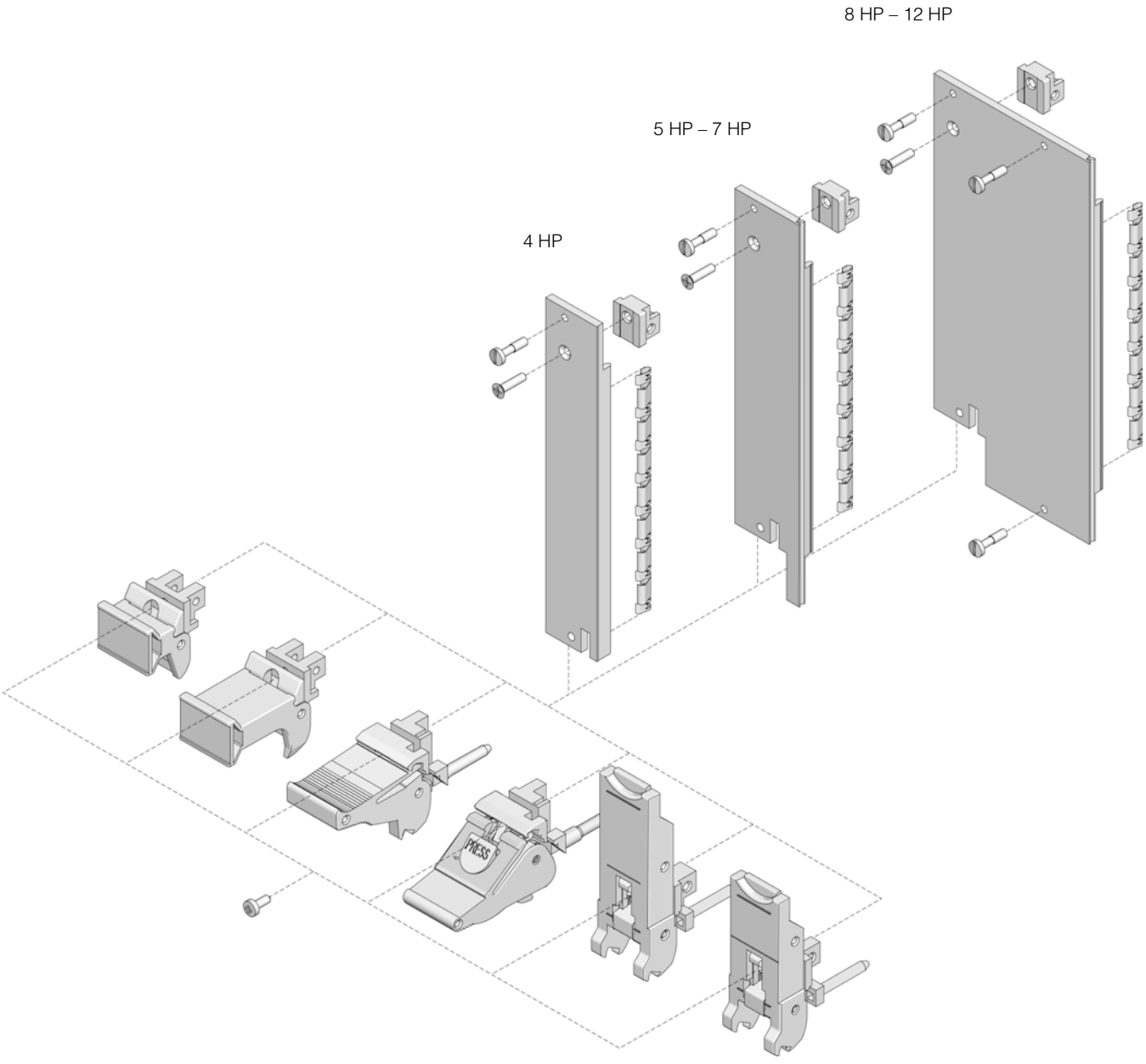

Front panel assembly

U-channel front panels 6 U, EMC, for type I, II, IV, IVs, VII handles Catalogue 33, page 241, 242

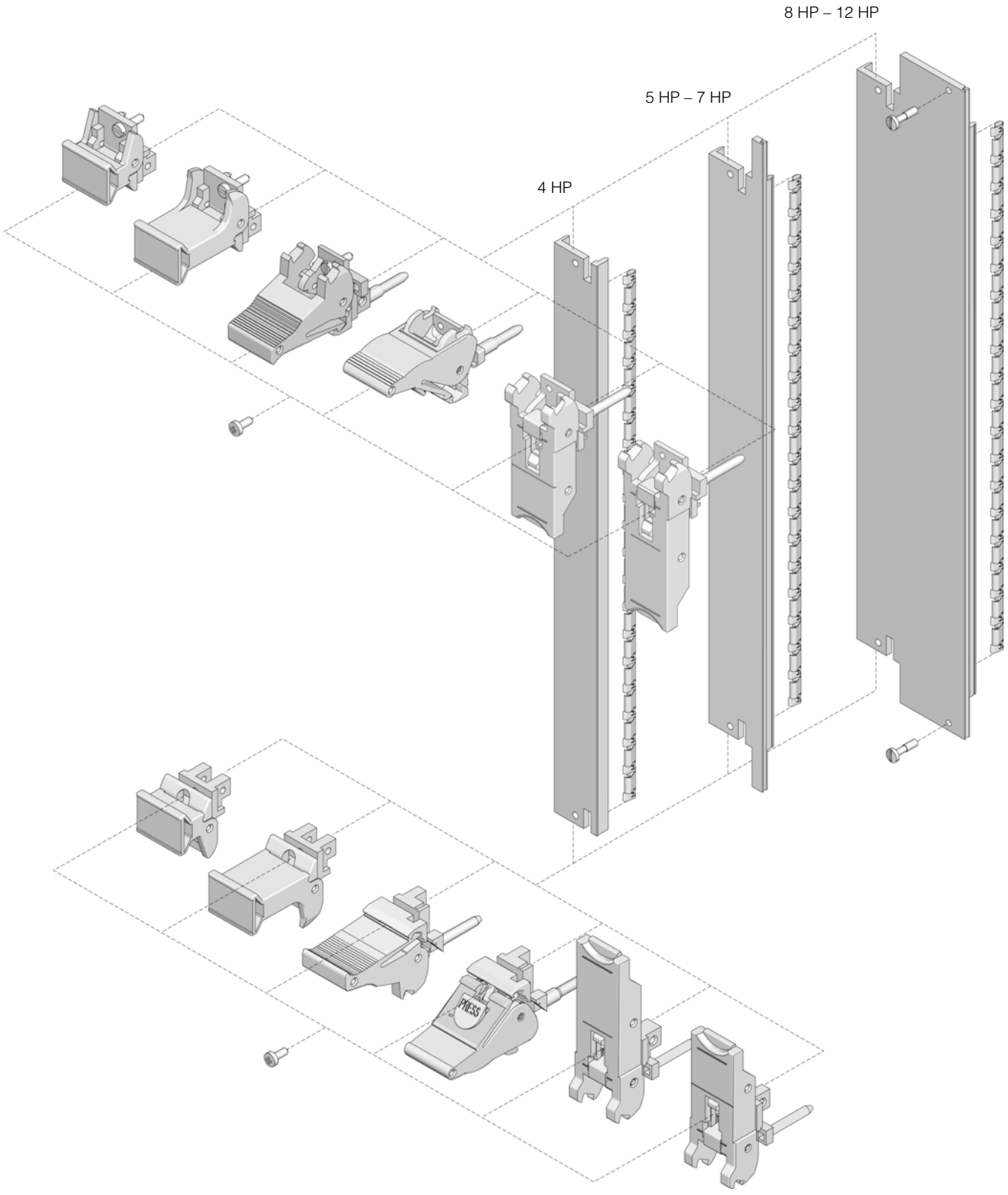

Accessories for subracks

Front panel assembly

Flat front panels 3 U/6 U, non-EMC, for type V handles, plastic Catalogue 33, page 243, 244

3 U, 4 HP

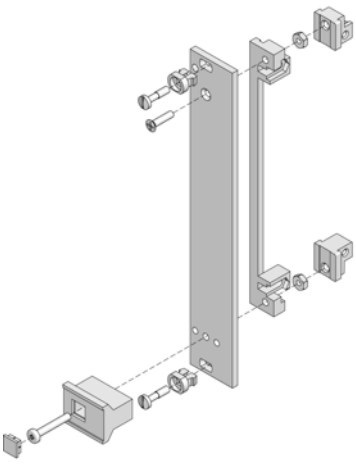

3 U, 6 HP – 8 HP

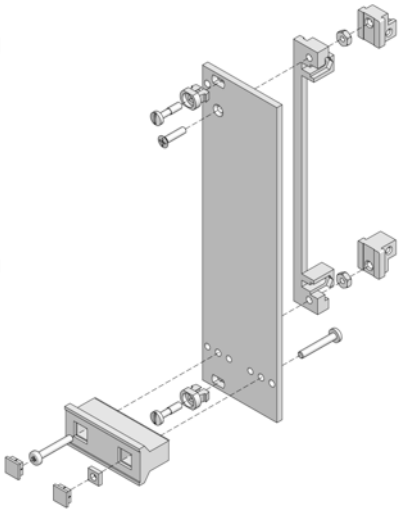

3 U, 10 HP – 14 HP

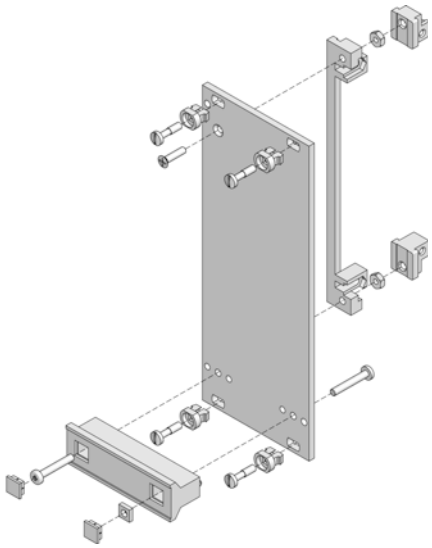

6 U, 4 HP

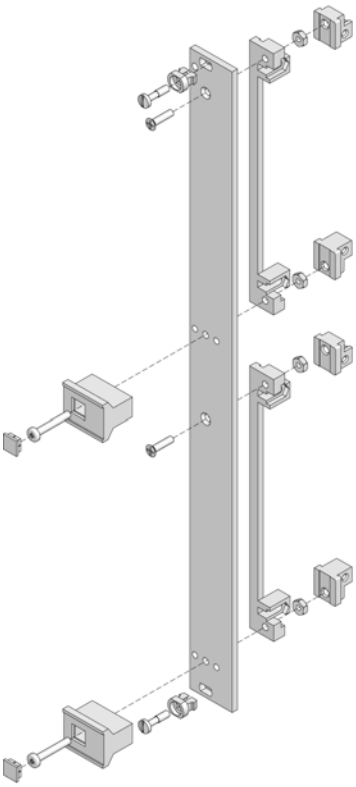

6 U, 6 HP – 8 HP

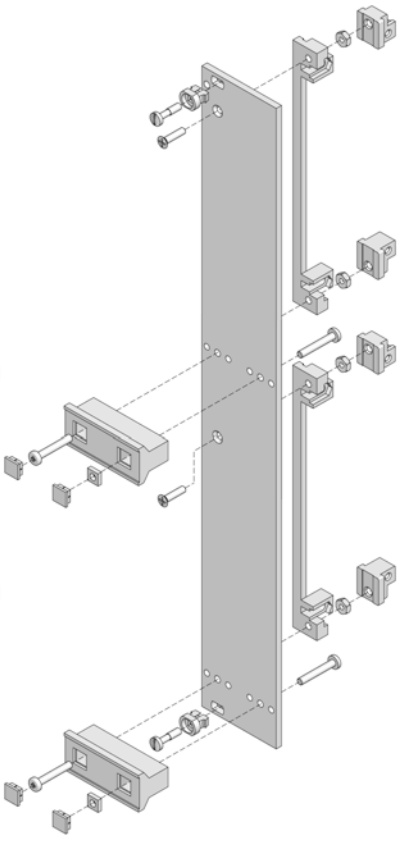

6 U, 10 HP – 14 HP

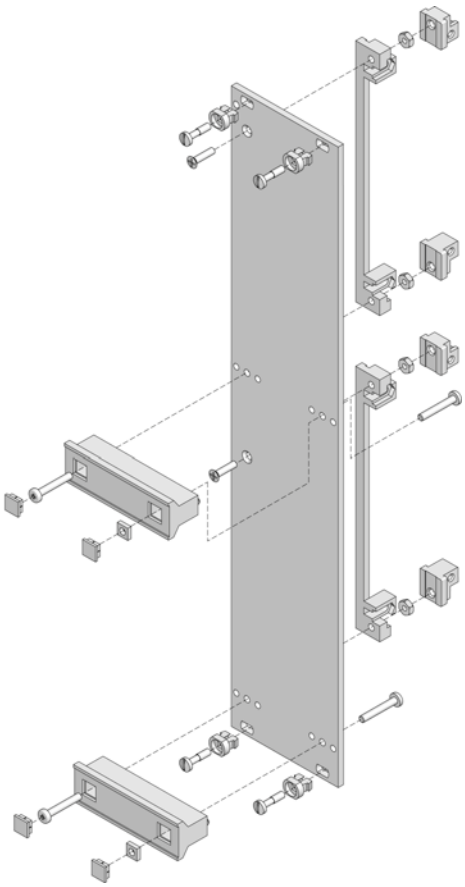

Front panel assembly

U-channel front panels 6 U, EMC, for type V handles, plastic Catalogue 33, page 243, 244

4 HP

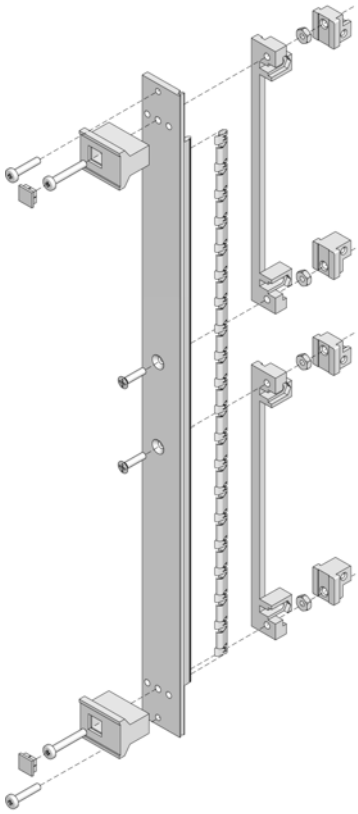

8 HP/10 HP

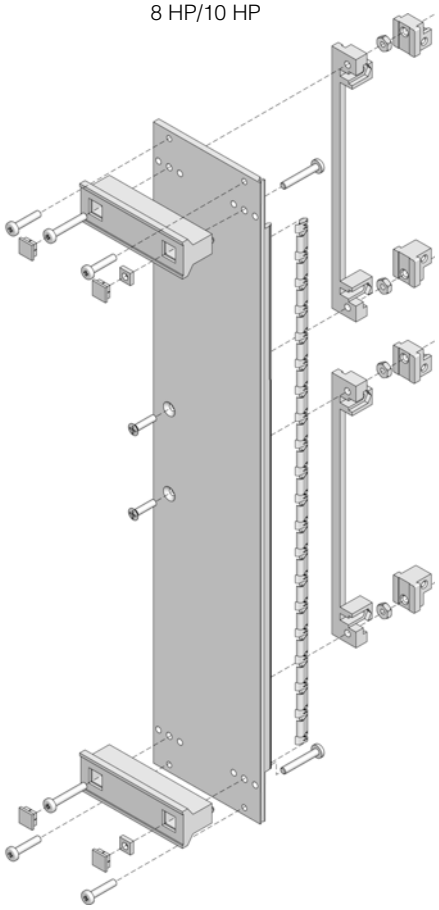

Accessories for subracks

Front panel assembly

U-channel front panels 6 U, EMC, for type V, VI handles, aluminium Catalogue 33, page 243, 244

4 HP

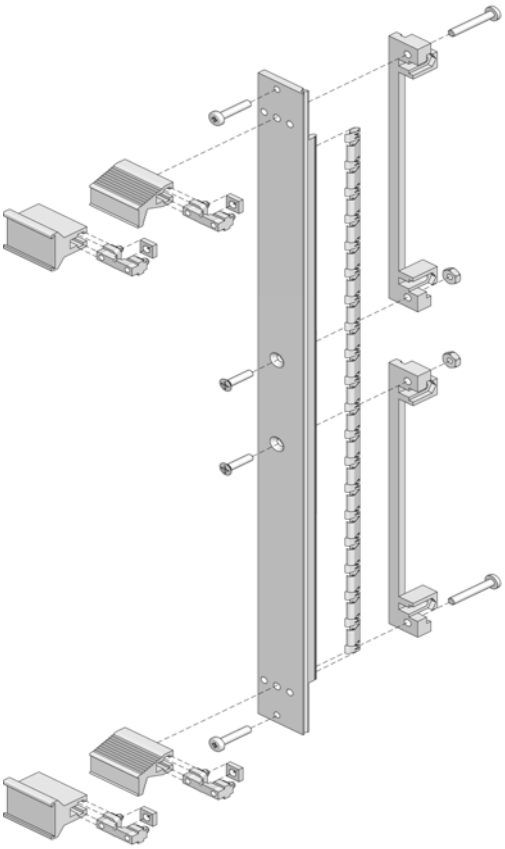

8 HP/10 HP

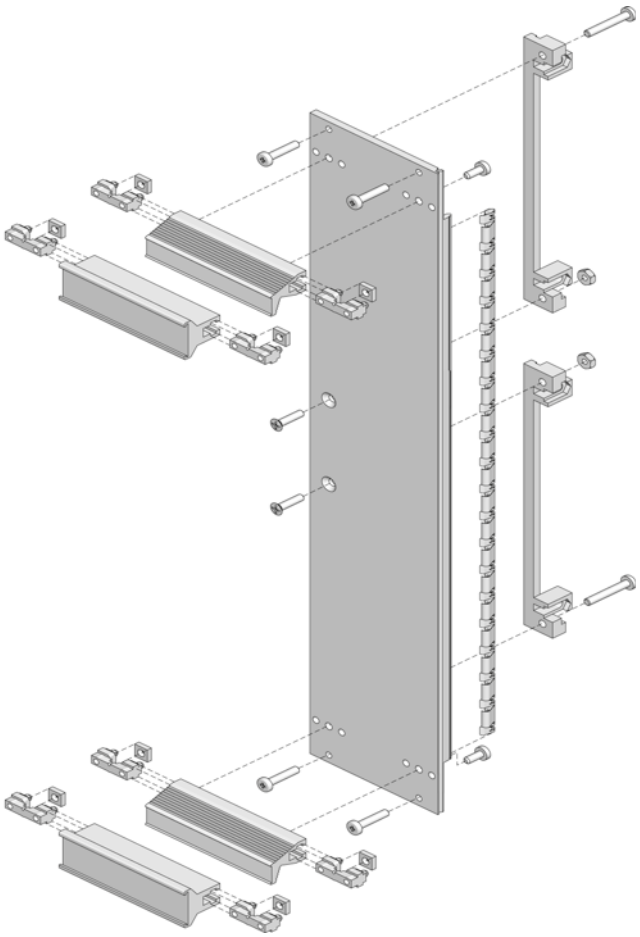

PCB holder

For front panels Catalogue 33, page 245

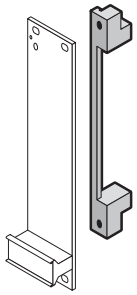

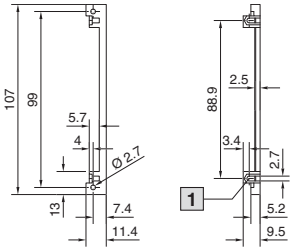

1 For nut M2.5

Front panels

As filler panels Catalogue 33, page 239

Flat

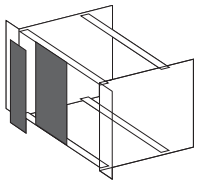

2 HP – 85 HP

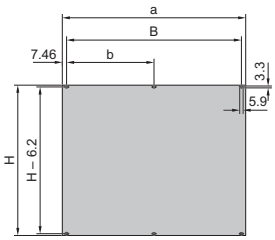

U-channel

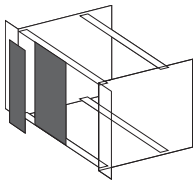

2 HP – 14 HP

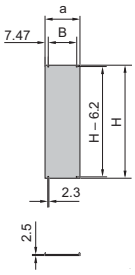

20 HP – 84 HP

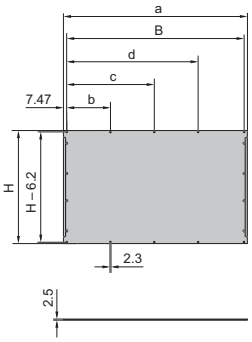

Flat front panel as filler panel

1 U H = 39.8 mm	3 U H = 128.7 mm	4 U H = 173.15 mm	6 U H = 262.05 mm	7 U H = 306.5 mm			
HP	HP	HP	HP	HP	a	B	b
–	2	–	2	–	9.8	–	–
–	3	–	3	–	14.9	–	–
–	4	–	4	–	20.0	–	–
–	5	–	5	–	25.1	–	–
–	6	–	–	–	30.1	–	–
–	7	–	–	–	35.2	–	–
–	8	–	8	–	40.3	–	–
–	10	–	10	–	50.5	35.6	–
–	12	–	12	–	60.6	45.7	–
–	14	–	14	–	70.8	55.9	–
–	20	–	–	–	101.3	86.4	–
–	21	–	–	–	106.4	91.4	–
–	28	–	28	–	141.9	127.0	–
–	40	–	40	–	202.9	188.0	–
–	42	42	42	–	213.0	198.1	–
84	84	84	84	84	426.4	411.5	203.2
–	85	–	85	–	431.5	431.5	203.2

U-channel front panel as filler panel

1 U H = 39.8 mm	3 U H = 128.7 mm	6 U H = 262.05 mm					
HP	HP	HP	a	B	b	c	d
–	2	2	9.8	–	–	–	–
–	3	–	14.9	–	–	–	–
–	4	4	20.0	–	–	–	–
–	5	5	25.1	–	–	–	–
–	6	6	30.1	–	–	–	–
–	7	–	35.2	–	–	–	–
–	8	8	40.3	25.4	–	–	–
–	10	10	50.5	35.6	–	–	–
–	12	12	60.6	45.7	–	–	–
–	14	14	70.8	55.9	–	–	–
–	20	20	101.3	86.4	–	–	–
–	21	–	106.4	91.4	–	–	–
–	28	28	141.9	127.0	61.0	–	–
–	40	–	202.9	188.0	91.5	–	–
–	42	42	213.0	198.1	96.5	–	–
–	60	60	304.5	289.6	96.5	193.0	–
84	84	84	426.4	411.5	101.6	203.2	304.8

Accessories for subracks

Front panels/EMC front panels

Hinged Catalogue 33, page 239

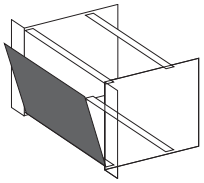

Front/rear panels for ventilation

Catalogue 33, page 239

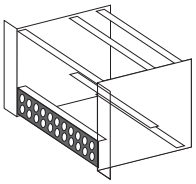

EMC version

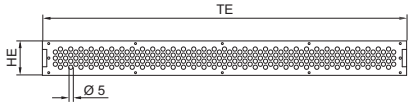

Non-EMC version

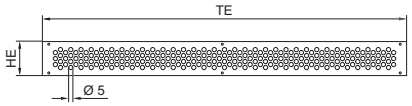

EMC version:

U (HE)	HP (TE)	Model No. RP
1	84	**3688.029**
3	84	**3688.030**

Non-EMC version:

U (HE)	HP (TE)	Model No. RP
1	84	**3684.812**
3	84	**3684.814**

Ripac box type plug-in units, type I

Catalogue 33, page 246

Section A – A
Type I, 3 U

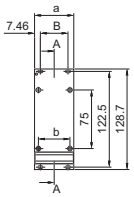

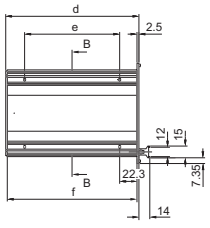

Section B – B
Type I, 3 U

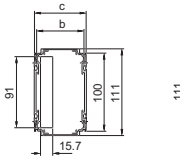

111

Board depth 160 mm

Model No. RP	HP	Dimensions (mm)						
3 U		a	B	b	c	d	e	f
3653.000	6	32.2	–	20.3	27.5	171.5	122	167
3653.010	8	40.3	–	30.5	36.0	171.5	122	167
3653.020	10	50.5	35.6	40.6	46.2	171.5	122	167
3653.030	12	60.6	45.7	50.8	56.4	171.5	122	167
3653.040	14	70.8	55.9	60.9	66.5	171.5	122	167
3653.050	21	106.3	91.4	96.4	102.0	171.5	122	167
3653.060	28	141.9	127.0	132.0	137.6	171.5	122	167

Board depth 220 mm

Model No. RP	HP	Dimensions (mm)						
3 U		a	B	b	c	d	e	f
3653.200	10	50.5	35.6	40.6	46.2	231.5	182	227
3653.210	12	60.6	45.7	50.8	56.4	231.5	182	227
3653.220	14	70.8	55.9	60.9	66.5	231.5	182	227
3653.230	21	106.3	91.4	96.4	102.0	231.5	182	227
3653.240	28	141.9	127.0	132.0	137.6	231.5	182	227

Ripac Vario-Module

Catalogue 33, page 252 – 255

2 U

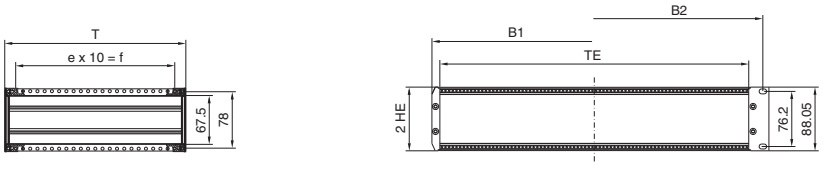

3 U

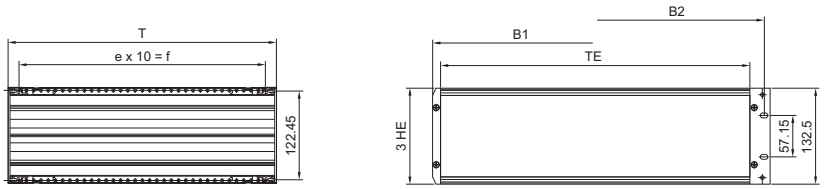

4 U

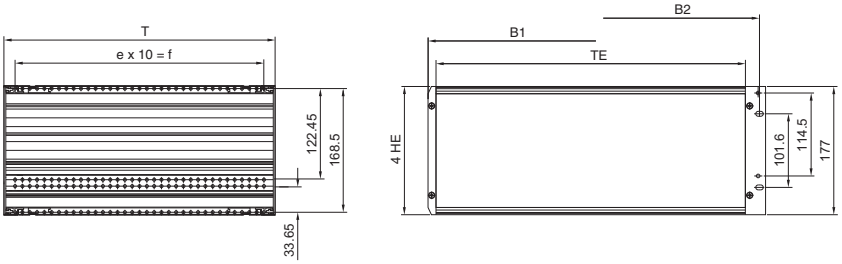

6 U

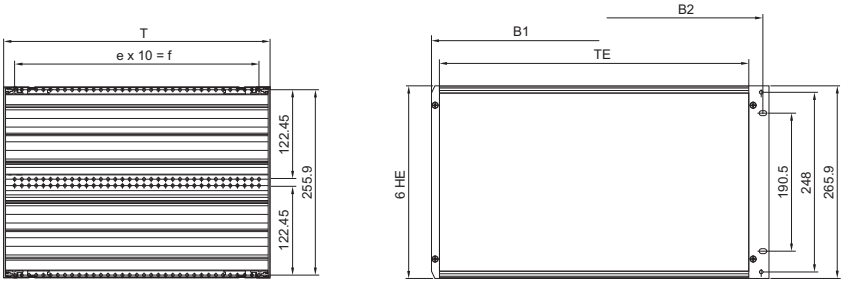

7 U

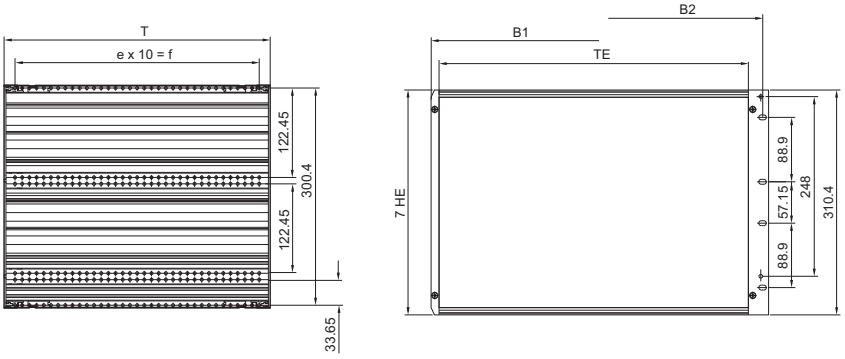

Model No. VM	U (HE)	HP (TE)	T mm	e	B1 mm	B2 mm
3982.040	3	42	250.4	22	235.6	251.6
3982.070	3	42	310.4	28	235.6	251.6
3982.050	3	63	250.4	22	342.3	358.3
3982.080	3	63	310.4	28	342.3	358.3
3982.060	3	84	250.4	22	449.0	465.1
3982.090	3	84	310.4	28	449.0	465.1
3982.100	3	84	370.4	34	449.0	465.1
3982.110	4	84	250.4	22	449.0	465.1
3982.120	4	84	310.4	28	449.0	465.1
3982.130	4	84	370.4	34	449.0	465.1
3982.140	6	84	310.4	28	449.0	465.1
3982.150	6	84	370.4	34	449.0	465.1
3982.160	6	84	430.4	40	449.0	465.1
3982.170	7	84	310.4	28	449.0	465.1
3982.190	7	84	430.4	40	449.0	465.1

Model No. VM (EMC)	U (HE)	HP (TE)	T mm	e	B1 mm	B2 mm
3983.040	3	42	250.4	22	235.6	251.6
3983.070	3	42	310.4	28	235.6	251.6
3983.050	3	63	250.4	22	342.3	358.3
3983.080	3	63	310.4	28	342.3	358.3
3983.030	2	84	310.4	28	449.0	465.1
3983.090	3	84	310.4	28	449.0	465.1
3983.100	3	84	370.4	34	449.0	465.1
3983.120	4	84	310.4	28	449.0	465.1
3983.130	4	84	370.4	34	449.0	465.1
3983.140	6	84	310.4	28	449.0	465.1
3983.150	6	84	370.4	34	449.0	465.1
3983.160	6	84	430.4	40	449.0	465.1

T = Depth
B = Width

Instrument cases

RiCase

269.2 mm (1/2 19˝) Catalogue 33, page 258

482.6 mm (19˝) Catalogue 33, page 259

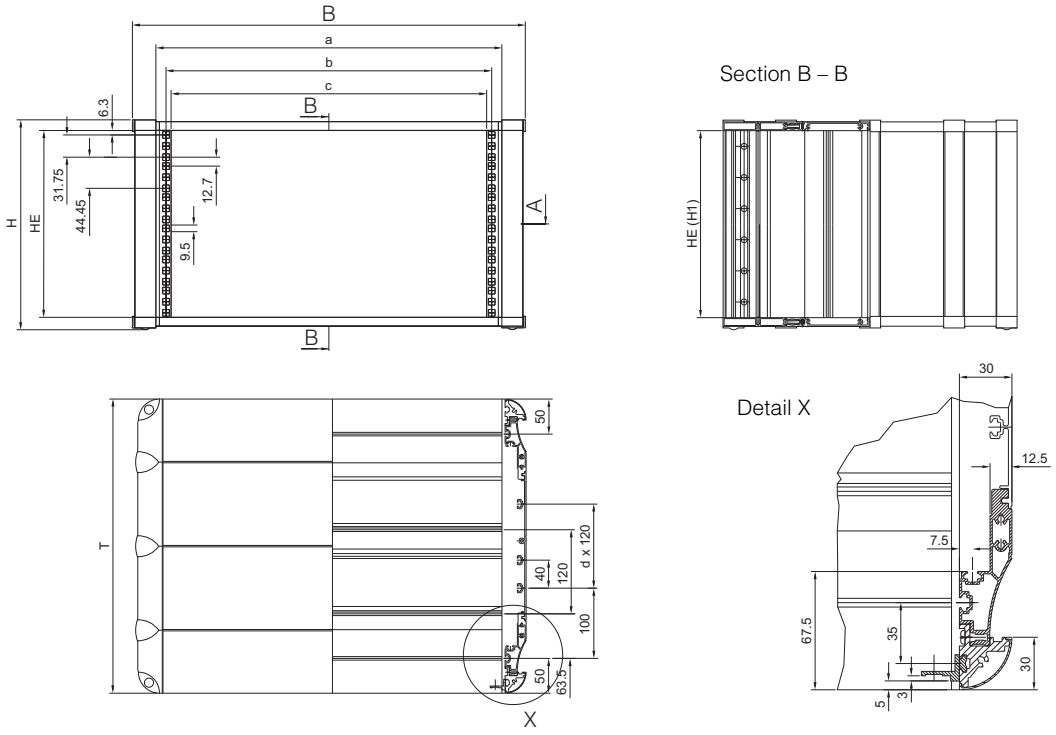

RiCase 269.2 mm (1/2 19˝)

Not vented			
Model No. RC	**3750.200**	**3750.210**	**3750.400**
U (HE)	2	3	4
Width (B) mm	348.6	348.6	348.6
Height (H) mm	121.9	166.4	210.8
H1 (U) mm	89.4	133.8	178.3
Depth (T) mm	300.0	300.0	420.0
a mm	280.6	280.6	280.6
b mm	251.6	251.6	251.6
c mm	237.2	237.2	237.2
d	–	–	1

RiCase 482.6 mm (19˝)

Not vented										
Model No. RC	**3750.310**	**3750.320**	**3750.420**	**3750.600**	**3750.610**	**3750.620**	**–**	**3750.710**	**–**	**3750.000**
Vented										
Model No. RC	**3750.330**	**3750.340**	**3750.440**	**–**	**3750.640**	**3750.650**	**3750.720**	**3750.730**	**3750.930**	**3750.030**
U (HE)	3		4	6			7		9	12
Width (B) mm	562.0	562.0	562.0	562.0	562.0	562.0	562.0	562.0	562.0	562.0
Height (H) mm	166.4	166.4	210.8	299.7	299.7	299.7	344.2	344.2	433.1	566.5
H1 (U) mm	133.8	133.8	178.3	267.2	267.2	267.2	311.7	311.7	400.6	534.0
Depth (T) mm	300.0	420.0	420.0	300.0	420.0	540.0	420.0	540.0	540.0	540.0
a mm	494.0	494.0	494.0	494.0	494.0	494.0	494.0	494.0	494.0	494.0
b mm	465.0	465.0	465.0	465.0	465.0	465.0	465.0	465.0	465.0	465.0
c mm	450.6	450.6	450.6	450.6	450.6	450.6	450.6	450.6	450.6	450.6
d	–	1	1	–	1	2	1	2	2	2

Keyboard lid

Catalogue 33, page 261

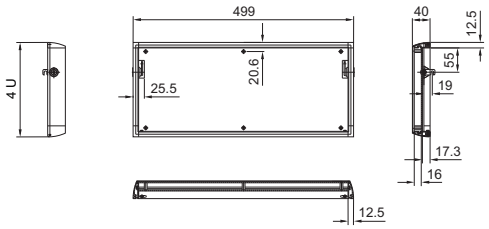

Front door/Aluminium front door

Catalogue 33, page 260, 261

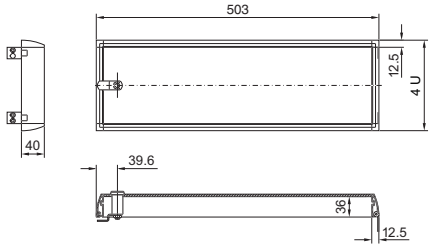

General remarks

When developing the Rittal busbar systems and their components, Rittal drew on the latest state of the art and the currently valid standards and regulations. These applications are used by specialist companies worldwide. As well as permanent in-house controls at Rittal, the quality of the SV components is further reinforced by a vast array of tests and approvals.

As product development is an on-going process, we reserve the right to make amendments in line with technical progress.

Application

In order to avoid injury and damage to property, busbar systems must only be assembled and used by suitably trained and qualified personnel. The valid technical regulations, standards and provisions must, of course, be observed.
Users are required to carefully observe the information and instructions supplied by Rittal, and where necessary to forward them to downstream users and/or customers with a special advice note. In particular, the specified tightening torques of electrical terminal connections must be observed in order to achieve an optimum contact pressure. After transportation the connections must be checked and retightened if necessary.

As a general principle, NH fuses are intended for use by electricians or persons who have received training in electrical engineering.

Please observe the following regulations and instructions regarding the connection of NH equipment:

- Observe the specifications to VDE 0105 – 100
- Before switching on, ensure that the cover is precisely located in the chassis
- If the cover is not fully open, the fuse inserts may be live, depending on the direction of infeed
- Connect quickly

Technical data and catalogue information/operating conditions

Power distribution components are used in conjunction with a wide range of different switchgear, assemblies and components for power distribution. These various assemblies and components necessitate a wide range of different operating and ambient conditions which are, firstly, outside of Rittal's sphere of influence, and secondly, must be guaranteed in order to allow safe operation by the plant manufacturer.

Unless otherwise indicated, IEC 61 439-1/IEC 61 439-2 and the specified ambient conditions for interior sitings up to contamination level 3 and overvoltage category IV apply as the basis for Rittal power distribution components in the IEC market. At enclosure internal temperatures of > 35°C, application-specific derating should be provided where necessary.
Specifically in relation to the limit temperatures specified in IEC/EN 61 439-1 (table 5) the following factors should be given critical consideration by the plant manufacturer:

- Arrangement of components in respect of the thermally interactive influences in the overall structure
- Heat loss of the circuit-breakers and fuses used
- Active/passive ventilation measures
- Required cable cross-sections according to standard and/or manufacturer data
- Operating mode of plant (switching cycles etc.)
- Consideration of the operating and ambient conditions
- Consideration of the simultaneity factor
- Consideration of the rated load factor (RDF)
- Consideration of the load factor

It should also be noted that the horizontal installation position is the standard installation position for busbar systems, and this therefore produces the vertical installation position for top-mounted equipment. Once assembly of the system has been completed, the minimum creepage distances and clearances to IEC/EN 60 664-1 should be checked.

Chemical contamination caused by direct contact with substances or an excessively chemically charged atmosphere during transportation, storage and operation of the components should be avoided, since this can lead to contact corrosion and other lasting negative influences.

Specifically for the UL market, the requirements to UL 508A apply to plant manufacturers. In particular, depending on the application, the required creepage distances and clearances must be taken into account.

Glossary of frequently used basic/user regulations for busbar systems and components

- **IEC/EN 60 269-1**
  Low-voltage switchgear
  Part 1: General requirements
- **IEC/EN 61 439-1**
  Low-voltage switchgear and controlgear assemblies
  Part 1: General specifications
  Replaces IEC/EN 60 439-1
- **IEC/EN 61 439-2**
  Low-voltage switchgear and controlgear assemblies
  Part 2: Power switchgear and controlgear assemblies
  Replaces IEC/EN 60 439-1
- **IEC/EN 61 439-3**
  Low-voltage switchgear and controlgear assemblies
  Part 3: Distribution boards intended to be operated by ordinary persons
- **IEC/EN 60 947-1**
  Low-voltage switchgear controlgear assemblies
  Part 1: General specifications
- **IEC/EN 60 947-3**
  Low-voltage switchgear and controlgear
  Part 3: Switches, disconnectors, switch-disconnectors and fuse-combination units
- **IEC/EN 60 664-1**
  Coordination of insulation for electrical operating equipment in low-voltage systems
  Part 1: Basic principles, requirements and tests
- **IEC/EN 60 999-1**
  Connector parts – Electrical copper conductors – Safety requirements for screw terminals and screwless terminals
  General and specific requirements for terminals for conductors from 0.2 mm^2 up to and including 35 mm^2
- **IEC/EN 60 999-2**
  Connector parts – Electrical copper conductors –
  Safety requirements for screw terminals and screwless terminals
  Part 2: Special requirements for terminals for conductors greater than 35 mm^2 up to and including 300 mm^2
- **DIN 43 671**
  Copper busbars, dimensioning for constant current
- **DIN 43 673-1**
  Busbar drill holes and screw fastenings, busbars with rectangular cross-section
- **IEC/EN 60 715**
  Dimensions of low-voltage switchgear –
  Standardised support rails for the mechanical attachment of electrical components in switching systems
- **DIN EN 13 601**
  Copper and copper alloys –
  Copper rods and wires for general use in electrical engineering
- **UL 248**
  Low-Voltage Fuses
- **UL 4248-1**
  Fuseholders Part 1: General Requirements
- **UL 486 E**
  Equipment Wiring Terminals for use with Aluminium and/or Copper Conductors
- **UL 489**
  Molded-Case Circuit breakers, Molded-Case Switch and Circuit-Breaker Enclosures
- **UL 508**
  Industrial Control Equipment
- **UL 508A**
  Industrial Control Panels
- **UL 512**
  Fuseholders
- **UL 845**
  Motor Control Centers
- **UL 891**
  Switchboards

General remarks

Ri4Power low-voltage switchgear assemblies with design certificate

The section types of Ri4Power low-voltage switchgear combinations comply with the design certificate to IEC 61 439-1 and IEC 61 439-2. If planned and executed in accordance with the specifications and assembly instructions for Ri4Power systems, the combination of section types corresponds to a low-voltage switchgear combination with design certificate to IEC 61 439-1 and IEC 61 439-2.

Testing of Ri4Power systems was carried out with the following switchgear brands:
- ABB
- Eaton
- Jean Müller
- Mitsubishi
- Schneider Electric
- Siemens
- Terasaki

and with RiLine components from Rittal. In contrast to a non-tested switchgear combination, the requirements for the selection of components and switchgear are linked to the tested types. When planning air circuit-breakers, where necessary, reduction factors should be taken into account for use at increased temperatures in the enclosure interior.

Before planning and assembling a tested switchgear combination, the technical parameters of a tested switchgear combination should be coordinated between the user and switchgear manufacturer. For tested execution of the Ri4Power system, we recommend use of the Rittal Power Engineering software. All parameters are integrated into this software, which guides users to the required solution.
Design testing of a switchgear combination confirms the combination of enclosure, busbar system and switchgear as a functioning unit, and verifies compliance with all technical limits.
The technical data of a switchgear combination with design certificate may deviate from the tested values of the individual components, since these components are often subject to different test requirements.

For busbar systems, too, the data within a tested switchgear combination may deviate from the data pursuant to DIN 43 671, since in addition to the enclosure and busbar system, testing also makes allowance for heat loss in switchgear. For this reason, the technical system data on pages 166 to 171 is decisive for the switchgear and controlgear assemblies with design certificate.
If field types with different ratings data are combined, please note that the lowest values for the main busbar system and the overall enclosure protection category prescribe the ratings for the overall switchgear combination.

Ri4Power low-voltage switchgear assemblies without design certificate

Ri4Power components may also be used outside of switchgear and controlgear assemblies with design certificate.

However, the technical data for the products and the short-circuit protection data and ratings data of the busbar systems must be observed.

Planning and project management in line with regulations

As a general principle, low-voltage switchgear and distributors should be planned to meet the operating conditions of their final installation site. To this end, the operator of the plant, in collaboration with the manufacturer, should stipulate the operating and ambient conditions. Moreover, as a general rule, the operator or planning office should also supply the manufacturer with full electrical specifications of both the mains supply end and the distributor outlet end. This makes it possible to plan and manufacture a cost-effective system with optimum adaptation to the technical requirements.

Important basic data for planning and project management

- Applicable regulations and standards, both regional and international
- Electricity supply company conditions
- Operator-specific regulations
- Mains-specific protective measures/mains type
- Rated voltage and frequency
- Rated current with due regard for the number of conductors (infeed and busbars)
- Rated insulation voltage
- Short-circuit current at the point of installation
- Location of incoming cables, from above or below
- Number of incoming cables, specifying the type and cross-section
- Number of outlets, specifying the operating load and the envisaged outgoing cables with type and cross-section
- For the outlet side, specification of the simultaneity factor and rated load factor of the relevant equipment items

Important operating and ambient conditions

- Rated operating voltage U_e
- Mains frequency f_n
- Rated insulation voltage U_i
- Rated surge voltage resistance U_{Imp}
- Rated current of switchgear assemblies I_{nA}
- Rated current of circuits I_{nc}
- Load factor
- Conditional rated short-circuit current I_{cc}
- Busbar rated current I_{sas}
- Rated surge current resistance I_{pk}
- Rated short-time current resistance I_{cw}
- Ambient temperature condition ϑ
- Atmospheric climatic stress, specifying the relative humidity and temperature
- Protection category of the overall system IP . . .
  Specification to IEC 60 529
- Protection category

Load factor

The load factor of a switchgear enclosure or part thereof (e.g. a field) comprising several main circuits refers to the ratio between the largest sum total of all currents anticipated at any given time in the affected main circuits and the sum total of the rated currents of all main circuits of the switchgear enclosure or observed part thereof.

Number of main circuits	Load factor
2 and 3	0.9
4 and 5	0.8
6 and 7	0.7
10 or more	0.6

Conductor connections

Unless mentioned separately in the Rittal product documentation or on the product itself, the conductor connections apply solely to the connection of Cu conductors. Connections with aluminium conductors are subject to special conductor preparation and must be serviced at regular intervals.
Please observe the torque specified on the product or in our documentation. In accordance with the valid regulation IEC/EN 60 999-1 and -2, terminal connections must not be subjected to any tensile loads. For this reason, in order to ensure proper installation, appropriate strain relief should be provided for the application in question. The clamping ranges specified in the Rittal documents represent the absolute figure for the minimum/maximum supply lead that may be used. When using wire end ferrules, because of the different crimping types, universal clearance cannot be given, since deviations for the clamping zone or electromagnetically unfavourable connections may occur. Generally speaking, care must be taken to ensure that the force effect of the terminal does not loosen or even counteract the natural compression of the wire end ferrule. For example, square and trapezoid compression is preferable for flat-compression terminals. For terminals with a circular action, round compression is the most suitable. Particularly with larger cross-sections, for example, the use of square or trapezoid-compressed conductors in terminals with a circular action may create an electromechanically inadequate connection. The reason for this is the self-release effect, since when the terminal is screwed together, the corners of the wire end ferrule are reshaped in a circular direction, and as a result, the actual compression between the conductor and ferrule can be rendered ineffective. Mechanically speaking, terminals have not been designed to impose a new compression form on the conductor. Such an application would be a classic example of inadmissible temperature rises, which in a worst case could lead to arcing as a result of ionisation of the immediate ambient air, and ultimately to complete destruction of the plant.

Names of conductor types to IEC/EN 60 228:

rs Round conductor, single-wire
ss Sector conductor, single-wire
rm Round conductor, multi-wire
sm Sector conductor, multi-wire
f Fine-wire

UL 486E applies to clamping connections to UL. We distinguish between clamping connections for field-wiring or factory-wiring. All clamping connections in Rittal RiLine60 busbar connection and component adaptors have been tested for the more stringent licensing requirements for field-wiring. Under UL 486E, no wire end ferrules must currently be used for cable preparation. The version with wire end treatment is being revised by UL.

Designation of conductor types to UL 486E:

s stranded (multi-wire)
sol solid (single-wire)

The following table shows the allocation of AWG and MCM cross-sections to conductor cross-sections in mm^2:

Conductor size	Absolute cross-section in mm^2	Next standard cross-section in mm^2
AWG 16	1.31	1.5
AWG 14	2.08	2.5
AWG 12	3.31	4
AWG 10	5.26	6
AWG 8	8.37	10
AWG 6	13.3	16
AWG 4	21.2	25
AWG 2	33.6	35
AWG 0	53.4	50
AWG 2/0	67.5	70
AWG 3/0	85	95
MCM 250	127	120
MCM 300	152	150
MCM 350	178	185
MCM 500	254	240
MCM 600	304	300

AWG = American Wire Gauges
MCM = Circular Mils (1 MCM = 1000 Circ. Mils = 0.5067 mm^2)

General remarks

Current carrying capacity of connection cables

The current carrying capacity of cables and lines depends on various factors. In addition to the actual insulation, i.e. the design of the cable sheathing, factors such as

- How the cable is laid
- Clustering
- Ambient temperatures

are decisive for the actual current carrying capacity of a conductor. Based on the following tables, it is possible to calculate the current carrying capacity of conductor cross-sections between 1.5 and 35 mm^2 with due regard for the aforementioned factors.

Current carrying capacity
of insulated PVC cables at an ambient temperature of +40°C, installation type E (IEC/EN 60 204-1:1998-11)

Nominal cross-section mm^2	Current capacity A
1.5	16
2.5	22
4	30
6	37
10	52
16	70
25	88
35	114

Conversion factors K_2
for the load capacity of cables (IEC/EN 60 204-1:1998-11)

Ambient temperature °C	Factor
30	1.15
35	1.08
40	1.00
45	0.91
50	0.82
55	0.71
60	0.58

Reduction factor for clustering of cables/lines K_1

How the cable is laid	No. of affected circuits			
E	2	4	6	9
	0.88	0.77	0.73	0.72

Sample calculation:
Calculate the maximum permissible conductor current for a 16 mm^2 PVC-insulated H07 connection cable for connection to a D 02-E 18 fusible element (SV 3418.000), based on the following conditions:

Ambient and cable-laying conditions:

- Cable laid in a cable duct with 6 loaded circuits
- Ambient temperature inside the enclosure 35°C
- Direct ambient temperature of the cable in the cable duct 50°C

$$\mathbf{I_{max} = I_{(40°C)} \cdot K_1 \cdot K_2}$$
$$\mathbf{= 70\ A \cdot 0.73 \cdot 0.82}$$
$$\mathbf{= 41.9\ A}$$

Summary:
At these ambient conditions, the load of the connection cable from the fusible element must not exceed a maximum of 41.9 A. In certain circumstances, this figure may be further reduced by additional influences such as baying of the components, unfavourable convection conditions in the layout etc.

Rated currents and short-circuit currents of standard transformers

Rated voltage U_N = 400 V	400 V		
Short-circuit voltage U_k		4%[1]	6%[2]
Power consumption S_{NT} [kVA]	Rated current I_N [A]	Short-circuit current $I_{k''}$[3] [kA]	
50	72	1.89	1.20
100	144	3.61	2.41
160	230	5.77	3.85
200	288	7.22	4.81
250	360	9.02	6.01
315	455	11.36	7.58
400	589	14.43	9.62
500	722	18.04	12.03
630	910	22.73	15.15
800	1156	28.86	19.24
1000	1444	36.08	24.05
1250	1805	45.09	30.06
1600	2312	57.72	38.48
2000	2882	72.15	48.10
2500	3613	90.32	60.21

[1] U_k = 4% standardised to DIN 42 503 for S_{NT} = 50 . . . 630 kVA
[2] U_k = 6% standardised to DIN 42 511 for S_{NT} = 100 . . . 1600 kVA
[3] $I_{k''}$ = Initial symmetrical short-circuit current of transformer when connecting to a mains supply with unlimited short-circuit lead

Information on the topic of “whiskers”

The EU electric scrap regulation RoHS prohibits the addition of lead to tin. In tin-plated busbars, this poses a major risk of whisker formation which can result in dangerous short-circuits between 2 phases or between a phase and earthed parts in switchgear.

Whiskers are hair-like, electrically conductive crystals which grow out of the tin layer in tin-plated busbars under defined conditions. Their diameter is generally in the region of 1 – 2 µm, and whiskers may be 10 to 12 mm in length. Whiskers grow as a result of mechanical stresses in the molecular tin structure, i.e. the migration of individual molecules leads to thread formation. The speed of growth is approximately 750 µm/month, with the growth rate being most favourable at 50°C. The ambient medium does not influence whisker growth. Whiskers can occur both in a high vacuum and under various atmospheres and humidities. The highest internal stresses occur in thin layers of tin, so that increased whisker growth is likely under such conditions.

The risk of whisker formation can be minimised by ensuring that the tin-plated surface is as matt as possible, and layer thicknesses of at least 10 – 20 µm are applied. These measures are fulfilled by the tin-plated flat bars that may be ordered on request from Rittal, as well as by the PLS 800 and PLS 1600. Additionally, the RiLine60 base tray and adaptor technology, based on the high level of contact hazard protection, is ideally designed in terms of insulation between the different potentials.

Rated currents of busbars E-Cu (DIN 43 671)

DIN 43 671 specifies the constant currents for busbars at an ambient temperature of 35°C and an average busbar temperature of 65°C. With the aid of a correction factor (k_2), the continuous currents specified in the following table may be adjusted to alternative operating temperatures.

For safe operation with thermal reserve, it is advisable to limit the busbar temperature to a maximum of 85°C. However, the decisive factor is the lowest permissible continuous temperature of the components which directly contact the busbar system (fuse bases, outgoing cables etc.). The ambient air temperature of the busbars or busbar system should not exceed 40°C; an average of 35°C maximum is recommended.

For the continuous temperatures specified in the table, an emission level of 0.4 applies, equivalent to an oxidating copper bar. In modern busbar systems – built into enclosures with a protection category of IP 54 and above – a more favourable emission level can be assumed. The lower emission level facilitates an additional increase in continuous currents compared with the figures in DIN 43 671, irrespective of the specified air and busbar temperature. Experience has shown an increase in the continuous current of 6 – 10% compared with the table figures for uncoated copper bars, and 60% for surface-oxidised copper bars.

Example:
For a Cu bar 30 x 10 mm (E-Cu F30), DIN 43 671 specifies a constant current of I_{N65} = 573 A.
The correction factor diagram for square cross-sections indicates a correction factor k_2 = 1.29 at an air temperature of 35°C and a busbar temperature of 85°C. Thanks to the favourable emission level, the continuous current is increased by a further 6 – 10%. In this example, a mean value of 8% is used. Compared with the table figure from DIN 43 671, the Rittal rated current specification for a Cu bar 30 x 10 mm is:

$$\mathbf{I_{N85} = I_{N65} \cdot k_2 + 8\%}$$
$$\mathbf{= 573\ A \cdot 1.29 \cdot 1.08}$$
$$\mathbf{I_{N85} = 800\ A}$$

Continuous currents for busbars
Made from E-Cu with square cross-section in indoor locations at 35°C air temperature and 65°C bar temperature, vertical position or horizontal position of the bar width.

Width x thickness mm	Cross-section mm²	Weight[1]	Material[2]	Continuous current in A			
				AC current up to 60 Hz		DC current + AC current 16 Hz	
				Bare bar	Coated bar	Bare bar	Coated bar
12 x 2	23.5	0.209	E-Cu F30	108	123	108	123
15 x 2	29.5	0.262		128	148	128	148
15 x 3	44.5	0.396		162	187	162	187
20 x 2	39.5	0.351		162	189	162	189
20 x 3	59.5	0.529		204	237	204	237
20 x 5	99.1	0.882		274	319	274	320
20 x 10	199.0	1.770		427	497	428	499
25 x 3	74.5	0.663		245	287	245	287
25 x 5	124.0	1.110		327	384	327	384
30 x 3	89.5	0.796		285	337	286	337
30 x 5	149.0	1.330		379	447	380	448
30 x 10	299.0	2.660		573	676	579	683
40 x 3	119.0	1.060		366	435	367	436
40 x 5	199.0	1.770		482	573	484	576
40 x 10	399.0	3.550		715	850	728	865
50 x 5	249.0	2.220		583	697	588	703
50 x 10	499.0	4.440		852	1020	875	1050
60 x 5	299.0	2.660		688	826	696	836
60 x 10	599.0	5.330		985	1180	1020	1230
80 x 5	399.0	3.550		885	1070	902	1090
80 x 10	799.0	7.110		1240	1500	1310	1590
100 x 10	999.0	8.890		1490	1810	1600	1940

[1] Calculated with a density of 8.9 kg/dm³
[2] Reference basis for the continuous current levels (figures taken from DIN 43 671)

Correction factor diagram to DIN 43 671

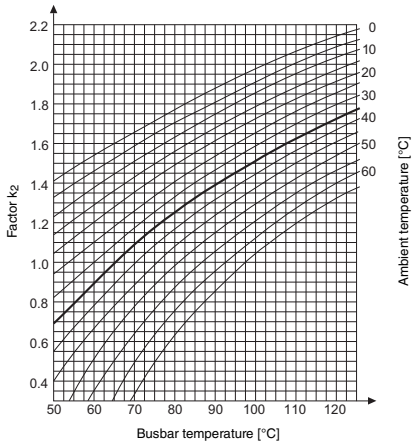

Correction factor diagram for PLS

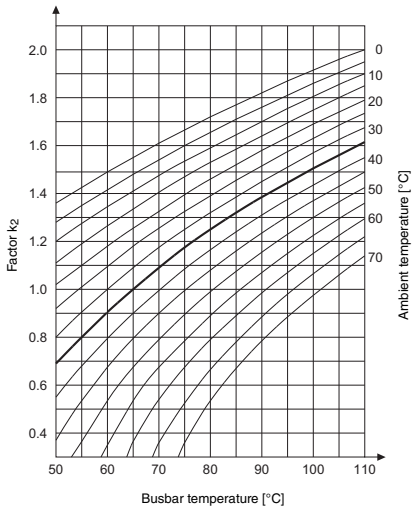

Rittal PLS current load
According to DIN 43 671, the correction factor k_2 (correction diagram) is used to correct the basic current with reference to the existing temperatures of the ambient air and the busbar. In accordance with DIN 43 671, the load figures of the Rittal PLS special bars have been determined on the basis of measurement trials, as follows:

PLS special busbars	Rated current AC 50/60 Hz	
	for 35/75°C	for 35/65°C (basic value)
PLS 800	800 A	684 A
PLS 1600	1600 A	1368 A

Rated currents of busbars E-Cu (DIN 43 671)

In addition to the rated currents for copper busbars to DIN 43 671, the following table lists additional values for rated currents of Flat-PLS busbar systems with bare copper bars for AC currents up to 60 Hz.

These values were determined on Flat-PLS busbars fitted in enclosures with various protection categories, as well as with and without forced ventilation. Depending on the busbar system and protection category, two figures are given, representing the rated current at an overtemperature of 30 K and 70 K. In contrast to the rated currents to DIN 43 671, the temperature outside the enclosure is measured as the ambient temperature here.

The benefit of this approach is that the enclosure housing, which may exert a major influence on the busbar system, is taken into account in the ratings data for the busbar system. Designing a busbar system to DIN 43 671 without consideration of the enclosure housing may lead to thermal problems in the enclosure interior, particularly with higher currents.

Although IEC 61 439-1 permits higher overtemperature limits than 70 K, the absolute busbar temperature at an ambient temperature of 35°C and 70 K overtemperature limit is 105°C. This figure of 105°C is high, but significantly below the thermal softening of copper material, and therefore acceptable.

Example:
If a rated current is used at an overtemperature of 30 K, this means that the temperature of the busbars is 30 K above the ambient temperature of the enclosure. Expressed in absolute figures, therefore, at an ambient temperature of 35°C around the enclosure housing, this produces a maximum absolute busbar temperature of 65°C.

Rated AC currents of Flat-PLS busbar system up to 60 Hz for bare copper bars (E-Cu F30) in A

Design of Flat-PLS busbar system	Protection category of enclosure										
	Ri4Power DIN 43 671	IP 2X with forced ventilation[1)]		IP 2X		IP 43		IP 54 with forced ventilation[2)]		IP 54	
	ΔT = 30 K	ΔT = 30 K	ΔT = 70 K	ΔT = 30 K	ΔT = 70 K	ΔT = 30 K	ΔT = 70 K	ΔT = 30 K	ΔT = 70 K	ΔT = 30 K	ΔT = 70 K
2 x 40 x 10 mm	1290	1780	2640	1180	1900	1080	1720	1680	2440	1040	1640
3 x 40 x 10 mm	1770	2240	3320	1420	2320	1280	2040	1980	2960	1200	1920
4 x 40 x 10 mm	2280	2300	3340	1460	2380	1320	2100	2080	3020	1260	2000
2 x 50 x 10 mm	1510	2200	3260	1340	2140	1200	1920	1980	2920	1140	1800
3 x 50 x 10 mm	2040	2660	3900	1580	2540	1400	2240	2320	3440	1320	2100
4 x 50 x 10 mm	2600	2700	4040	1640	2660	1440	2340	2360	3500	1380	2220
2 x 60 x 10 mm	1720	2220	3340	1440	2300	1280	2060	2020	2940	1200	1920
3 x 60 x 10 mm	2300	2700	4120	1720	2780	1540	2440	2400	3520	1440	2260
4 x 60 x 10 mm	2900	2740	4220	1740	2840	1580	2540	2420	3580	1460	2360
2 x 80 x 10 mm	2110	2760	4160	1740	2840	1600	2560	2540	3720	1480	2360
3 x 80 x 10 mm	2790	3300	5060	2000	3260	1840	2960	3060	4520	1680	2700
4 x 80 x 10 mm	3450	3680	5300	2060	3440	1900	3060	3220	4880	1780	2820
2 x 100 x 10 mm	2480	3240	4840	1920	3200	1800	2880	2900	4340	1660	2660
3 x 100 x 10 mm	3260	3580	5400	2200	3720	1980	3240	3320	4880	1920	2980
4 x 100 x 10 mm	3980	3820	5500	2320	3820	2000	3400	3380	4900	1960	3120

[1)] For I_N < = 2000 A using fan-and-filter unit SK 3243.100,
for I_N > 2000 A using fan-and-filter unit SK 3244.100.
[2)] For I_N < = 2000 A using fan-and-filter unit SK 3243.100 and outlet filter SK 3243.200,
for I_N > 2000 A using fan-and-filter unit SK 3244.100 and outlet filter SK 3243.200.

For calculating rated currents at temperatures between the overtemperature limits of Flat-PLS busbar systems, the correction factor diagram may be used. If data is available regarding the maximum ambient temperature and the maximum bar temperature, a correction factor k_2 may be calculated using the correction factor diagram. With a correction factor k_2 and a specified rated current at 30 K overtemperature limit, the new rated current is calculated.

Example:
Flat-PLS 100 busbar system
with 4 x 100 x 10 mm

I_{N30} at IP 2X = 2320 A
ambient temperature = 35°C
Bar temperature = 85°C

From the diagram, this produces a factor k_2 = 1.29

The new rated current under these conditions is then calculated as follows:

$$I_N = I_{N30} \cdot k_2$$
$$= 2320\ A \cdot 1.29$$
$$= 2992\ A$$

Correction factor diagram

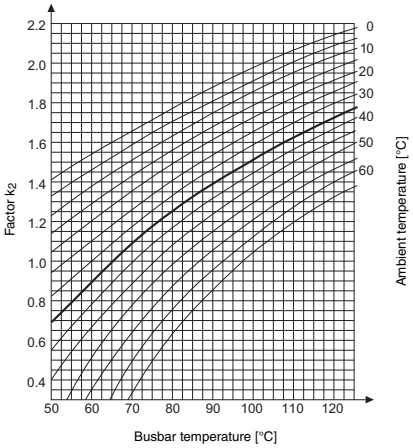

Calculation of heat loss in busbars

The heat loss of busbars can be calculated using the following equation, provided the AC current resistance is known:

$$P_v = \frac{I_B^2 \cdot r \cdot l}{1000}$$

P_v [W] heat loss

I_B [A] operating current

r [mΩ/m] AC or DC current resistance of the busbar

l [m] length of busbar which I_B flows through

In order to calculate the heat loss in accordance with the above formula, in individual cases it can be assumed that the rated current of a circuit and/or the "operating currents" of the busbar sections and the corresponding length of the conductor system in the installation or distributor are known. By contrast, the resistance of conductor systems – particularly the AC current resistance of busbar arrangements – cannot simply be taken from a document or determined yourself.

For this reason, and in order to obtain comparable results when determining heat losses, the table shows the resistance values in mΩ/m for the most common cross-sections of copper busbars.

AC current resistance of busbars of E-Cu 57

Dimensions[1]	Resistance per 1 m of busbar system in mΩ/m[2]							
	I 1 main conductor		III 3 main conductors		II II II 3 x 2 main conductors		III III III 3 x 3 main conductors	
mm	r_{GS}[1] (65°C)	r_{WS}[2] (65°C)	r_{GS}[1] (65°C)	r_{WS}[2] (65°C)	r_{GS}[1] (65°C)	r_{WS}[2] (65°C)	r_{GS}[1] (65°C)	r_{WS}[2] (65°C)
1	2	3	4	5	6	7	8	9
12 x 2	0.871	0.871	2.613	2.613				
15 x 2	0.697	0.697	2.091	2.091				
15 x 3	0.464	0.464	1.392	1.392				
20 x 2	0.523	0.523	1.569	1.569				
20 x 3	0.348	0.348	1.044	1.044				
20 x 5	0.209	0.209	0.627	0.627				
20 x 10	0.105	0.106	0.315	0.318	0.158	0.160		
25 x 3	0.279	0.279	0.837	0.837	0.419	0.419		
25 x 5	0.167	0.167	0.501	0.501	0.251	0.254		
30 x 3	0.348	0.348	1.044	1.044	0.522	0.527		
30 x 5	0.139	0.140	0.417	0.421	0.209	0.211		
30 x 10	0.070	0.071	0.210	0.214	0.105	0.109		
40 x 3	0.174	0.174	0.522	0.522	0.261	0.266		
40 x 5	0.105	0.106	0.315	0.318	0.158	0.163		
40 x 10	0.052	0.054	0.156	0.162	0.078	0.084	0.052	0.061
50 x 5	0.084	0.086	0.252	0.257	0.126	0.132	0.084	0.092
60 x 5	0.070	0.071	0.210	0.214	0.105	0.112	0.070	0.079
60 x 10	0.035	0.037	0.105	0.112	0.053	0.062	0.035	0.047
80 x 5	0.052	0.054	0.156	0.162	0.078	0.087	0.052	0.062
80 x 10	0.026	0.029	0.078	0.087	0.039	0.049	0.026	0.039
100 x 5	0.042	0.045	0.126	0.134	0.063	0.072	0.042	0.053
100 x 10	0.021	0.024	0.063	0.072	0.032	0.042	0.021	0.033
120 x 10	0.017	0.020	0.051	0.060	0.026	0.036	0.017	0.028

[1] r_{GS} DC current resistance of the busbar system in mΩ/m
[2] r_{WS} AC current resistance of the busbar system in mΩ/m

The resistance values shown in the table are based on an assumed average busbar temperature of 65°C (ambient temperature + self-heating) and therefore on a specific resistance of

$$\rho_{(65°C)} = 20.9 \left[\frac{m\Omega \cdot mm^2}{m}\right]$$

Example: r_{GS} for 1 main conductor 12 x 2 mm

$$r_{GS} = \frac{\rho\,(65°C) \cdot l}{A} = \frac{20.9 \left[\frac{m\Omega \cdot mm^2}{m}\right] \cdot 1\ m}{24\ mm^2} = 0.871\ m\Omega$$

For busbar temperatures other than 65°C, the resistance may be calculated as follows:

Positive temperature deviation
$r_{(x)} = r_{(65°C)} \cdot (1 + \alpha \cdot \Delta\vartheta)$

Negative temperature deviation
$r_{(x)} = r_{(65°C)} \cdot (1 + \alpha \cdot \Delta\vartheta)$

$r_{(x)}$ [mΩ/m] resistance at any given temperature

α $\left[\frac{1}{K}\right]$ Temperature coefficient (for Cu = $0.004 \frac{1}{K}$)

$\Delta\vartheta$ [K] Temperature difference in relation to the resistance value at 65°C

ρ $\left[\frac{m\Omega \cdot mm^2}{m}\right]$ Specific resistance

Drilling patterns and drilled holes

Busbar widths mm		12 to 50		25 to 60			60			80 to 100		
Form[1)]		1		2			3			4		
Drilled holes in the bar ends (drilling pattern)		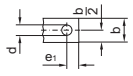		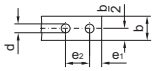			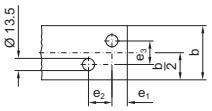			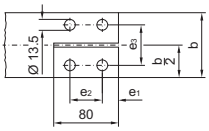		
	Nominal width b	d	e_1	d	e_1	e_2	e_1	e_2	e_3	e_1	e_2	e_3
Hole size	**12**	5.5	6	–	–	–	–	–	–	–	–	–
	15	6.6	7.5	–	–	–	–	–	–	–	–	–
	20	9.0	10	–	–	–	–	–	–	–	–	–
	25	11	12.5	11	12.5	30	–	–	–	–	–	–
	30	11	15	11	15	30	–	–	–	–	–	–
	40	13.5	20	13.5	20	40	–	–	–	–	–	–
	50	13.5	25	13.5	20	40	–	–	–	–	–	–
	60	–	–	13.5	20	40	17	26	26	–	–	–
	80	–	–	–	–	–	–	–	–	20	40	40
	100	–	–	–	–	–	–	–	–	20	40	50
Permissible deviations for hole-centre distances ± 0.3 mm												

[1)] Shape designations 1 – 4 match DIN 46 206, part 2 – Flat-type screw terminal

Examples of busbar screw connections

Longitudinal connectors

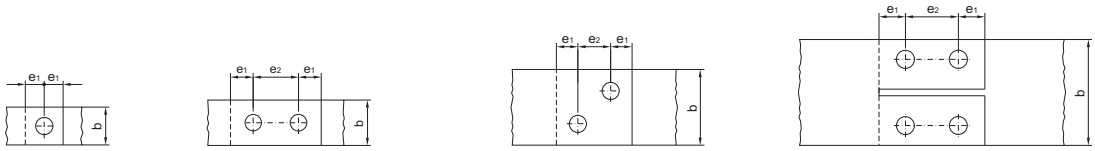

Angular connectors

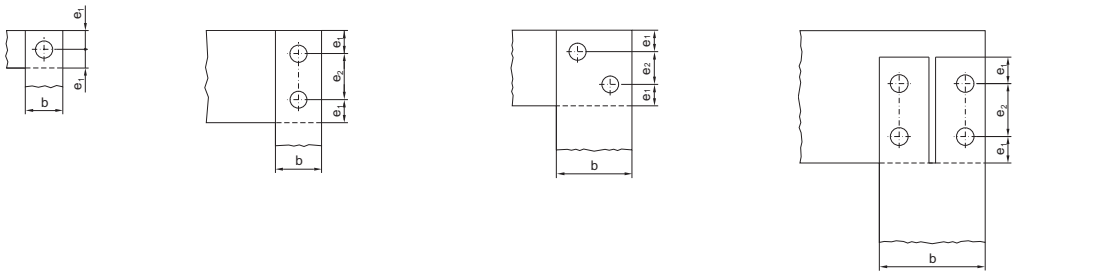

T-connectors

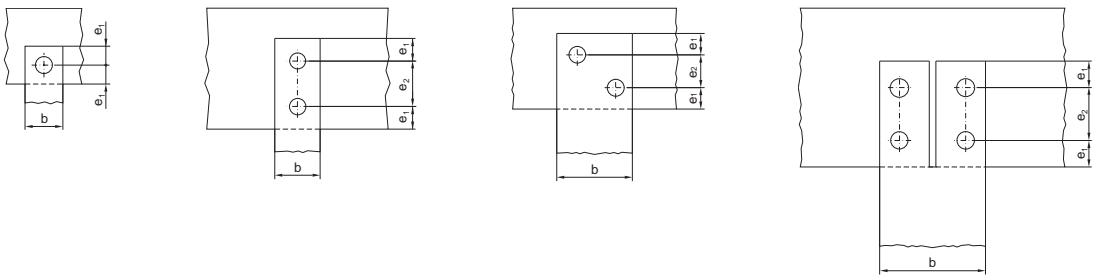

Note:
For figures for dimensions b, d, e_1 and e_2 refer to table “Drilling patterns and drilled holes”.
Slots are permissible at one end of the bar or at the end of a bar stack.

Use of semi-conductor fuses

Use of semi-conductor fuses in Rittal RiLine NH disconnectors/ fuse-switch disconnectors and bus-mounting fuse bases

The overload and short-circuit protection of semi-conductor components places very high demands on fuse inserts. Because semi-conductor components have a low thermal capacity, the integral disconnect value (I^2t-value) of the semi-conductor fuse inserts type aR, gR or gRL must match the integral limit value of the semi-conductor cell being protected. Consequently, the tripping characteristic of the fuse inserts must be very fast, and overvoltage during the disconnection process (switching or arc voltage) must be as minimal as possible. Compared with fuse inserts for cable and line protection and transformer protection, the particular features of semi-conductor fuse inserts produce a comparatively high heat loss.

The high heat loss is dissipated to the environment in the form of thermal energy. Because NH switchgear only has a limited capacity to dissipate thermal energy to the environment, the maximum heat loss ($P_{v\ max.}$/fuse insert) is listed in the technical specifications of the NH switchgear. If the values exceed the heat loss specified by the manufacturer, the rated current should be reduced in accordance with the table opposite, or the minimum connection cross-section increased accordingly to encourage heat dissipation.
These technical properties also apply to semi-conductor fuses based on standards IEC 60 269-3 and 60 269-4. These fuses are equivalent to the Neozed and Diazed fuses commonly available on the market, and may be physically inserted into the Rittal bus-mounting fuse bases.
Care should be taken to ensure that the heat loss of the comparable fuse with gL or gG characteristic is not exceeded. If necessary, allowance should be made for reduction factors.

Reduction factors for fuse inserts to DIN EN/IEC 60 269-2 for NH disconnectors

With due regard for the reduction factors listed in the following tables and minimum connection cross-sections, all overtemperature limits prescribed by IEC/EN 60 947-3 are met. The values were calculated on the basis of the IEC/EN standard assembly. Siemens Sitor fuses to IEC 60 269-2 were used for sample testing.

NH disconnectors, size 00

Sitor fuse insert				Min. connection cross-section (Cu)	Reduction factor	Max. operating current[1)]
Model No.	Size	In A	Operating category	mm^2		A
3NE8 017	00	50	gR	10	0.9	45
3NE8 018	00	63	gR	16	0.9	60
3NE8 020	00	80	aR	25	0.85	70
3NE8 021	00	100	aR	35	0.85	85
3NE8 022	00	125	aR	50	0.80	100
3NE8 024	00	160	aR	70	0.75	120
3NE1 021-2	00	100	gR	35	1.0	100
3NE1 022-2	00	125	gR	50	0.95	120
3NE1 022-0	00	125	gS	50	1.0	125

1) Maximum operating current figures have been rounded to the nearest 5 A.

NH disconnectors. size 1

Sitor fuse insert				Min. connection cross-section (Cu)	Reduction factor	Max. operating current[1)]
Model No.	Size	In A	Operating category	mm^2		A
3NE3 221	1[2)]	100	aR	35	0.95	95
3NE3 222	1[2)]	125	aR	50	0.9	110
3NE3 224	1[2)]	160	aR	70	0.9	150
3NE3 225	1[2)]	200	aR	95	0.85	170
3NE3 227	1[2)]	250	aR	120	0.8	200
3NE3 230-0B	1[2)]	315	aR	185	0.75	240
3NE1 225-2	1	200	gR	95	1.0	200
3NE1 227-2	1	250	gR	120	0.95	240
3NE1 230-2	1	315	gR	185	0.9	285
3NE1 230-0	1	315	gS	185	0.95	300

1) Maximum operating current figures have been rounded to the nearest 5 A.
2) Fuse design with slotted contact blades corresponding to IEC 60 269-4. Devices must only be switched while off-load.

NH disconnectors, size 2

Sitor fuse insert				Min. connection cross-section (Cu)	Reduction factor	Max. operating current[1]
Model No.	Size	In A	Operating category	mm²		A
3NE1 331-2	2	350	gR	2 x 95	1.0	350
3NE1 333-2	2	450	gR	2 x 120	0.95	425
3NE1 334-2	2	500	gR	2 x 120	0.9	450
3NE1 334-0	2	500	gS	2 x 120	1.0	500
3NE3 332-0B	2[2]	400	aR	240	0.85	340
3NE3 333	2[2]	450	aR	2 x 150	0.8	360

[1] Maximum operating current figures have been rounded to the nearest 5 A.
[2] Fuse design with slotted contact blades in accordance with IEC 60 269-4. Devices must only be switched while off-load.

NH disconnectors, size 3

Sitor fuse insert				Min. connection cross-section (Cu)	Reduction factor	Max. operating current[1]
Model No.	Size	In A	Operating category	mm²		A
3NE1 435-2	3	560	gR	2 x 185	1.0	560
3NE1 436-2	3	630	gR	2 x 40 x 5	1.0	630
3NE1 447-2	3	670	gR	2 x 40 x 5	0.95	650
3NE1 437-2	3	710	gR	2 x 40 x 5	0.9	650
3NE1 437-0	3	710	gS	2 x 40 x 5	0.95	675

[1] Maximum operating current figures have been rounded to the nearest 5 A.

Note:
Where possible, we recommend using the next-largest conductor cross-section in order to ensure superior heat dissipation. When using several NH devices close together, the rated load factor pursuant to IEC 60 439, Table 1 must be observed. For configuration of the busbar system, we recommend the following design, depending on the size of the NH disconnector:

NH disconnector size	Busbar system
NH 00	At least 30 x 5 mm
NH 1 – 2	At least 30 x 10 mm
NH 3	PLS 1600

Heat loss of fuse inserts for bus-mounting fuse bases

The following table shows the maximum power output per fuse insert for Rittal D 02/D II and D III fusible elements. These values are based on DIN VDE 0636-3 and HD 60 269-3 “Low-voltage fuses Part 3: Supplementary requirements for use by unskilled persons”, Table 101. For other heat losses, it is necessary to calculate application-dependent reduction factors for the rated current. This primarily concerns applications with fuse characteristics aR or gR (semi-conductor fuses), which may have considerably greater heat losses by virtue of their design.

Rated current I_n A	Maximum power output W	
	D 01/D 02	D II/D III
2	2.5	3.3
4	1.8	2.3
6	1.8	2.3
10	2.0	2.6
13	2.2	2.8
16	2.5	3.2
20	3.0	3.5
25	3.5	4.5
35	4.0	5.2
50	5.0	6.5
63	5.5	7.0

Short-circuit protection diagrams to IEC

Short-circuit protection diagrams to IEC/EN 60 439-1

Type testing to IEC/EN 60 439-1
During the course of system type-testing, the following tests were conducted on the Rittal busbar systems and on representative Rittal RiLine60 top-mounting components:

Proof of insulating properties (to IEC/EN 60 439-1, 8.2.2)
Test piece: Representative system configuration.
Test with surge voltage 1.2/50 µs, 9.8 kV.

Proof of short-circuit resistance (to IEC/EN 60 439-1, 8.2.3)
see short-circuit resistance diagrams below.

Proof of creepage distances and clearance (to IEC/EN 60 439-1, 8.2.5)
Test piece: Representative system configuration.

Mini-PLS busbar support

up to 250 A, 3-pole
Catalogue 33, page 270

Model No. SV 9600.000

40 mm bar centre distance,
for Mini-PLS special busbars.

Rated operating voltage:
up to 690 V AC
Level of contamination: 3
Rated frequency: 50/60 Hz

Basis of test:
VDE 0660, part 500/IEC 60 439.

Test implemented:
Rated surge current resistance I_{pk}

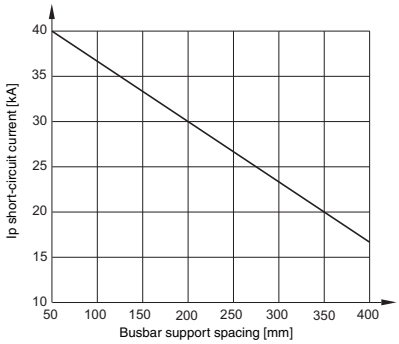

Busbar support

up to 800 A, 3-pole
Catalogue 33, page 276

Model No. SV 9340.000/SV 9340.010

60 mm bar centre distance,
for busbars 15 x 5 – 30 x 10 mm.

Rated operating voltage: up to 690 V AC
Rated insulation voltage: 1000 V AC
Rated surge voltage: 8 kV

Overvoltage category: IV
Level of contamination: 3
Rated frequency: 50/60 Hz

Test implemented:
- Rated surge current resistance I_{pk}
- Rated short-time current resistance I_{cw}

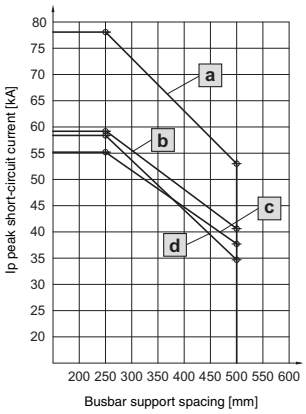

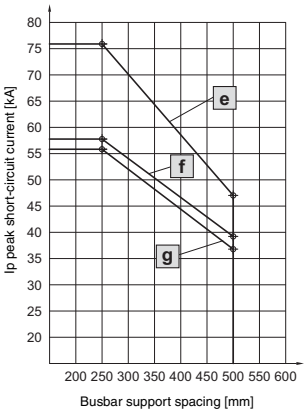

Busbar mm	l mm	I_{cw}[1] kA
30 x 10	250	37.6
30 x 5	250	36.0
20 x 10	250	29.0

[1] For 1 sec.
l = Busbar support spacing

Busbar mm	Curve
30 x 10	a
20 x 10	b
25 x 5	c
15 x 5	d

Busbar mm	Curve
30 x 5	e
20 x 5	f
15 x 10	g

PLS busbar support

up to 800 A/1600 A, 3-pole
Catalogue 33, page 278/279

Model No. SV 9341.000/SV 9342.000

60 mm bar centre distance,
for Mini-PLS special busbars.

Rated operating voltage: up to 690 V AC
Rated insulation voltage: 1000 V AC
Rated surge voltage: 8 kV

Overvoltage category: IV
Level of contamination: 3
Rated frequency: 50/60 Hz

Test implemented:
– Rated surge current resistance I_{pk}
– Rated short-time current resistance I_{cw}

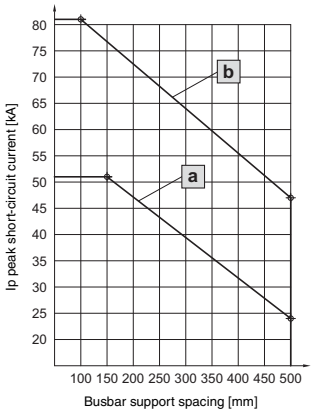

Model No. SV	Busbar mm	l mm	I_{cw} [1] kA
a 9341.000	PLS 800	150	25.9
b 9342.000	PLS 1600	150	37.5

[1] For 1 sec.
l = Busbar support spacing

Busbar support

up to 800 A, 4-pole
Catalogue 33, page 277

Model No. SV 9340.004/SV 9342.014

60 mm bar centre distance,
for 30 x 10 mm busbars.

Rated operating voltage: up to 690 V AC
Rated insulation voltage: 1000 V AC
Rated surge voltage: 8 kV

Overvoltage category: IV
Level of contamination: 3
Rated frequency: 50/60 Hz

Test implemented:
– Rated surge current resistance I_{pk}
– Rated short-time current resistance I_{cw}

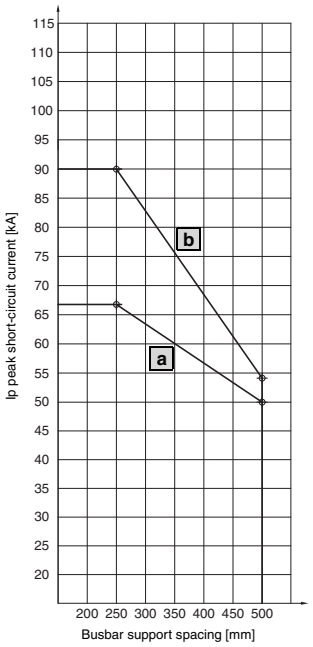

Model No. SV	Busbar mm	l mm	I_{cw} [1] kA
a 9340.004	30 x 10	250	29
		500	23
b 9342.014	30 x 10	250	42
		500	25

[1] For 1 sec.
l = Busbar support spacing

PLS busbar support

up to 1600 A, 4-pole
Catalogue 33, page 279

Model No. SV 9342.004

60 mm bar centre distance,
for Mini-PLS special busbars.

Rated operating voltage: up to 690 V AC
Rated insulation voltage: 1000 V AC
Rated surge voltage: 8 kV

Overvoltage category: IV
Level of contamination: 3
Rated frequency: 50/60 Hz

Test implemented:
– Rated surge current resistance I_{pk}
– Rated short-time current resistance I_{cw}

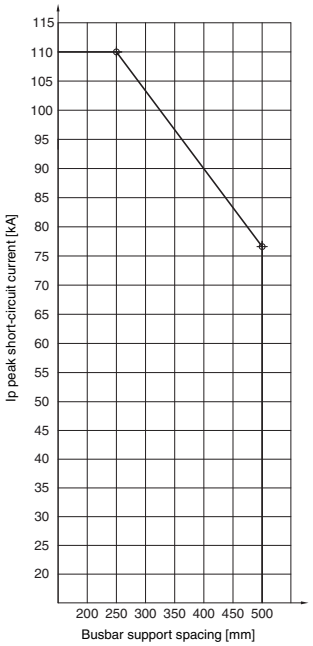

Busbar mm	l mm	I_{cw} kA
PLS 1600	250	50 [1]
	250	53 [2]
	500	38 [2]

[1] For 3 sec.
[2] For 1 sec.
l = Busbar support spacing

Short-circuit protection diagrams to IEC

Busbar support

up to 1250 A, 3-pole
Catalogue 33, page 340

Model No. SV 3073.000

100 mm bar centre distance,
for busbars 30 x 10 – 60 x 10 mm.

Rated operating voltage:
up to 1000 V AC
Level of contamination: 3
Rated frequency: 50/60 Hz

Basis of test:
VDE 0660, part 500/IEC 60 439.

Test implemented:
Rated surge current resistance I_{pk}

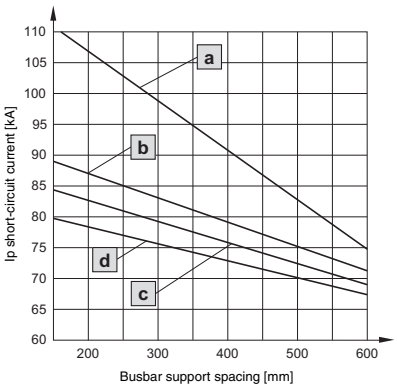

Busbar E-Cu mm	Rated current up to A	Curve
30 x 10	800	d
40 x 10	850	c
50 x 10	1000	b
60 x 10	1250	a

Busbar support

up to 1600 A, 3-pole
Catalogue 33, page 340

Model No. SV 3052.000

185 mm bar centre distance,
for busbars 50 x 10 – 80 x 10 mm.

Rated operating voltage:
up to 1000 V AC
Level of contamination: 3
Rated frequency: 50/60 Hz

Basis of test:
VDE 0660, part 500/IEC 60 439.

Test implemented:
Rated surge current resistance I_{pk}

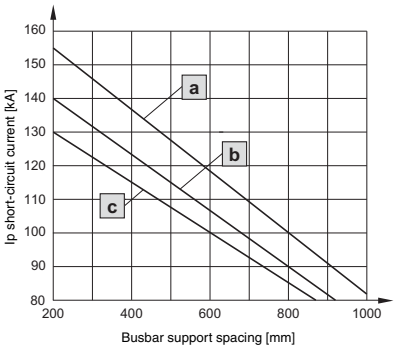

Busbar E-Cu mm	Rated current up to A	Curve
50 x 10	1000	c
60 x 10	1250	b
80 x 10	1600	a

Busbar support

up to 2500 A/3000 A, 3-pole
Catalogue 33, page 340

150 mm bar centre distance.

Rated operating voltage:
up to 1000 V AC
Level of contamination: 3
Rated frequency: 50/60 Hz

Basis of test:
VDE 0660, part 500/IEC 60 439.

Test implemented:
Rated surge current resistance I_{pk}

Model No. SV 3055.000 (2500 A),
bar accommodation
3 x 2 x 80 x 10 mm.

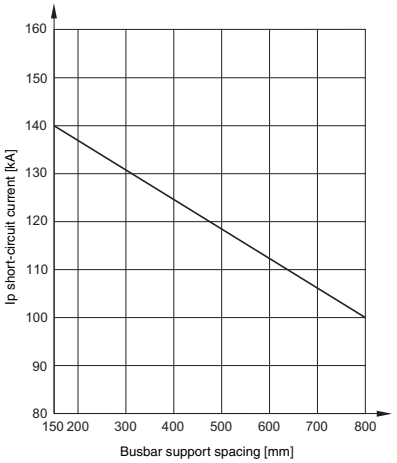

Model No. SV 3057.000 (3000 A),
bar accommodation
3 x 2 x 100 x 10 mm.

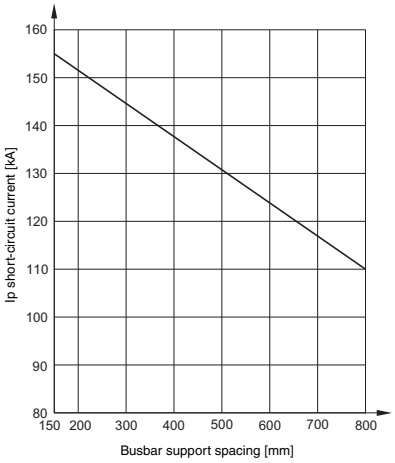

Busbar support Flat-PLS 60

1- to 4-pole
Catalogue 33, page 332

Model No. SV 9676.002/SV 9676.020

120 mm bar centre distance,
for busbars 40 x 10 – 60 x 10 mm.
Population: 2, 3 or 4 bars per support

Rated operating voltage: up to 690 V AC
Rated insulation voltage: 1000 V AC
Rated surge voltage: 8 kV

Overvoltage category: IV
Level of contamination: 3
Rated frequency: 50/60 Hz

Test implemented:
– Rated surge current resistance I_{pk}
– Rated short-time current resistance I_{cw}

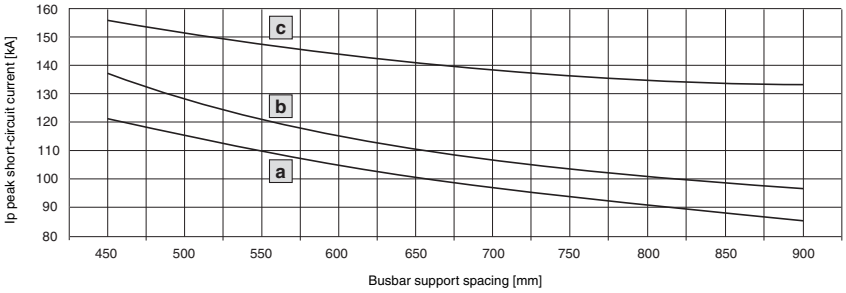

Busbar mm	l mm	I_{cw} kA/1 sec.	Curve
4 x 60 x 10	450	55.0	a
4 x 60 x 10	900	40.0	
4 x 60 x 10	450	60.0	b
4 x 60 x 10	900	45.0	
4 x 60 x 10	450	70.0	c
4 x 60 x 10	900	60.0	

l = Busbar support spacing

Curve	Design of busbar attachment
a	basic version[1)]
b	with busbar claws[2)]
c	with busbar stabilisers and busbar claws[2)]

[1)] Basic version consists of system attachment with fitted busbar support.
[2)] Version see page 161.

Busbar support Flat-PLS 100

1- to 4-pole
Catalogue 33, page 332

Model No. SV 9676.004/SV 9676.021

165 mm bar centre distance,
for busbars 80 x 10 – 100 x 10 mm.
Population: 2, 3 or 4 bars per support

Rated operating voltage: up to 690 V AC
Rated insulation voltage: 1000 V AC
Rated surge voltage: 8 kV

Overvoltage category: IV
Level of contamination: 3
Rated frequency: 50/60 Hz

Test implemented:
– Rated surge current resistance I_{pk}
– Rated short-time current resistance I_{cw}

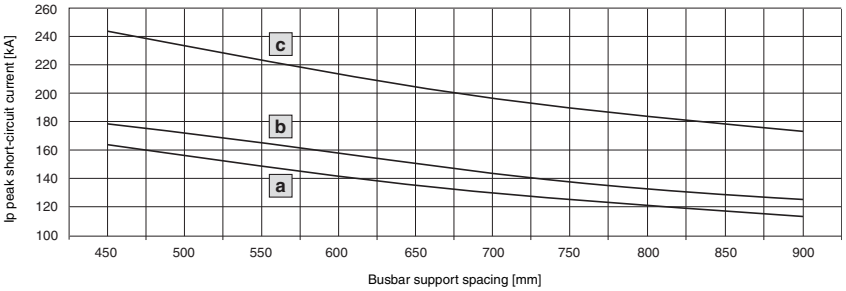

Busbar mm	l mm	I_{cw} kA/1 sec.	Curve
4 x 100 x 10	450	75.0	a
4 x 100 x 10	900	52.0	
4 x 100 x 10	450	81.6	b
4 x 100 x 10	900	55.9	
4 x 100 x 10	450	110.0	c
4 x 100 x 10	900	78.0	

l = Busbar support spacing

Curve	Design of busbar attachment
a	basic version[1)]
b	with busbar claws[2)]
c	with busbar stabilisers and busbar claws[2)]

[1)] Basic version consists of system attachment with fitted busbar support.
[2)] Version see page 161.

Busbar claws

2-, 3- or 4-way
Catalogue 33, page 333

Model No. SV 9676.017 to SV 9676.019

Supplementary information on Flat-PLS short-circuit protection diagrams
Mounting distance of busbar claws:
In order to achieve the cited short-circuit protection, the busbar claws must be fitted at a spacing of 300 mm. If there is a busbar support, a contact maker or a longitudinal connector located within this 300 mm, there is no need to fit a claw at this point.

Max. distance	mm
Busbar claw – Busbar claw	≤ 300
Busbar claw – Busbar support	≤ 300
Busbar claw – Contact maker	≤ 300
Busbar claw – Longitudinal connector	≤ 300

Short-circuit protection diagrams to IEC



Laminated copper bars

Catalogue 33, page 314

Configuration[1] mm	I_n for 70 K[2]	I_n for 50 K[2]	I_n for 30 K[2]	Curve (short-circuit resistance)	Installation type	**Model No. SV**
8 x 6 x 0.5	195 A	165 A	125 A	–	–	3565.015
6 x 9 x 0.8	285 A	240 A	180 A	–	–	3565.005
4 x 15.5 x 0.8	330 A	275 A	210 A	–	–	3567.005
6 x 15.5 x 0.8	415 A	350 A	265 A	a	1	3568.005
10 x 15.5 x 0.8	575 A	480 A	365 A	a	1	3569.005
5 x 20 x 1	525 A	435 A	330 A	a	1	3570.005
5 x 24 x 1	605 A	510 A	385 A	a	1	3571.005
10 x 24 x 1	920 A	770 A	585 A	b	1	3572.005
5 x 32 x 1	770 A	645 A	485 A	b	2/3	3573.005
10 x 32 x 1	1155 A	965 A	730 A	c	2/3	3574.005
5 x 40 x 1	930 A	780 A	590 A	b	2/3	3575.005
10 x 40 x 1	1370 A	1145 A	865 A	c	2/3	3576.005
5 x 50 x 1	1125 A	940 A	710 A	b	2/3	3577.005
10 x 50 x 1	1635 A	1365 A	1030 A	c	2/3	3578.005
10 x 63 x 1	1950 A	1610 A	1230 A	d	2/3	3579.005

[1] Number of lamina x lamina width x lamina thickness
[2] The conductor temperature of the laminated copper bar is derived by adding the ambient temperature and the temperature increase together.
Example:
SV 3565.005 carrying 180 A, i.e. the temperature increases by 30 K. At an ambient temperature of 35°C, this produces a resultant conductor temperature of 35°C + 30 K = 65°C.

Short-circuit resistance diagrams

Basis of test:
VDE 0660, part 500/IEC 60 439-1.
Test implemented:
Dynamic short-circuit resistance to IEC 60 439-1.

The dimensions for the support spacing (l) and for the centre-to-centre spacing (a) must be within the specified min./max. limits. The quotients of l/a can be used to determine the permissible short-circuit current I_p by using curves a to d. The prescribed installation type must be taken into account.

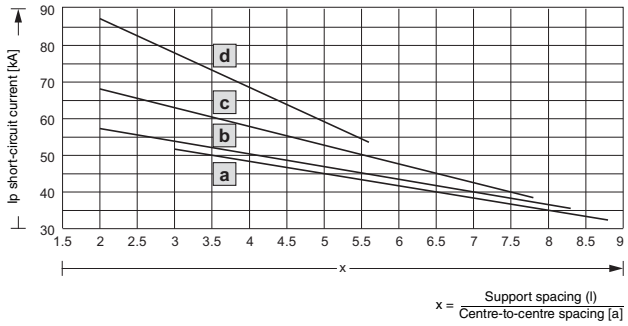

Curve	Support spacing (l) mm		Centre-to-centre spacing (a) mm	
	min.	max.	min.	max.
a	150	300	34	60
b	150	350	42	85
c	200	400	51	85
d	200	450	81	100

Type of assembly with universal support SV 3079.000

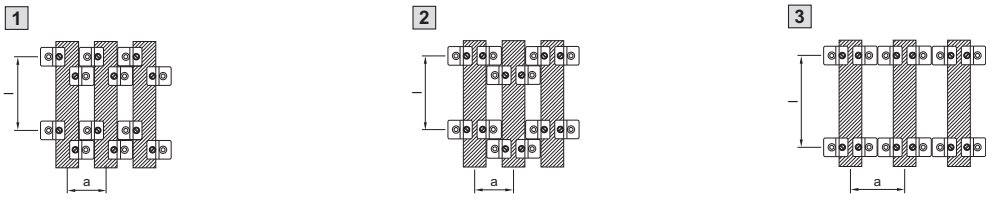

Short-circuit protection diagrams to UL 508

The short-circuit resistance of Rittal RiLine60 has been extensively tested. Short-circuit resistance to UL criteria is assessed via the root-mean-square value of the short-circuit current (I_{RMS}), which must be applied for at least 3 periods (60 ms).

During the course of testing, the test equipment has been adjusted to the respective root-mean-square values (I_{RMS}). The resultant peak short-circuit currents I_p are shown in the short-circuit protection diagrams below.

Busbar support

for feeder circuits 700 A, 3-pole
Catalogue 33, page 276

60 mm bar centre distance,
for busbars 15 x 5 – 30 x 10 mm.

Note:
SV 9340.050 with E-Cu 30 x 5/10 mm
With a pre-fuse, the following short-circuit value can be achieved:
– Support spacing: 350 mm
– Fuse: Class L 800 A
– I_{RMS}: 50 kA

Settings I_{RMS} ($I_{eff.}$) of the test equipment without pre-fuse:

Support spacing mm	I_{RMS} kA
250	35
500	25

Support spacing mm	I_{RMS} kA
250	30
500	22

SV 9340.050
with 30 x 5/10 mm

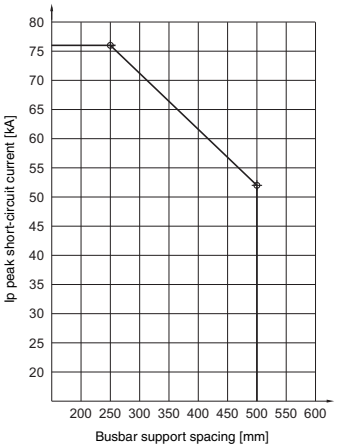

SV 9340.050
with 25 x 5 mm
20 x 5/10 mm
15 x 5/15 mm

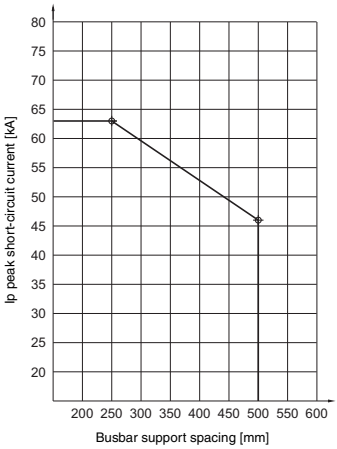

Busbar support

for feeder circuits
700 A (PLS 800)/1400 A (PLS 1600), 3-pole
Catalogue 33, page 278/279

60 mm bar centre distance,
for PLS special busbars.

Note:
SV 9342.050 (PLS 1600)
With a pre-fuse, the following short-circuit value can be achieved:
– Support spacing: 250 mm
– Fuse: Class L 1400 A
– I_{RMS}: 65 kA

Settings I_{RMS} ($I_{eff.}$) of the test equipment without pre-fuse:

Support spacing mm	I_{RMS} kA
200	22
500	14

Support spacing mm	I_{RMS} kA
150	35
500	25

SV 9341.050 (PLS 800)

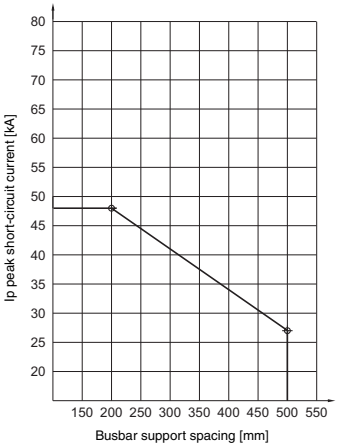

SV 9342.050 (PLS 1600)

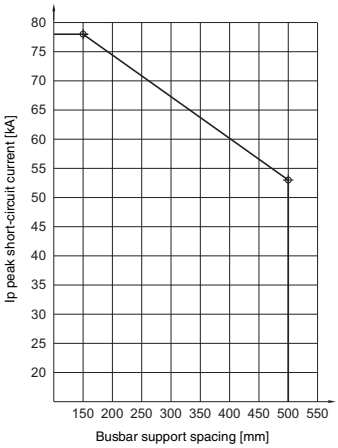

Short-circuit protection diagrams to UL 508/System data

Busbar support

for feeder circuits up to 700 A, 4-pole
Catalogue 33, page 277

Model No. SV 9340.004/SV 9342.014

60 mm bar centre distance.

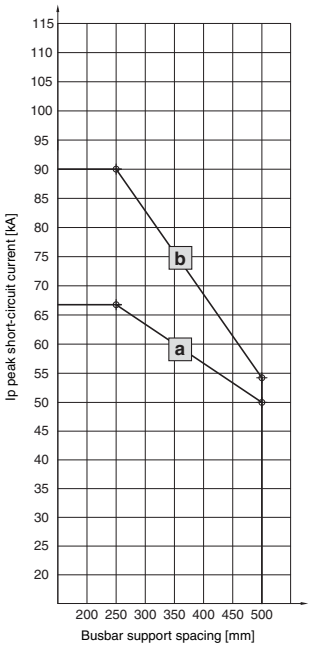

Settings I_{RMS} ($I_{eff.}$) of the test equipment without pre-fuse:

Model No. SV	Busbar mm	Support spacing mm	I_{RMS}
a 9340.004	15 x 5 – 30 x 10	250	30
		500	22
b 9342.014	30 x 10	250	42
		500	25

Busbar support

for feeder circuits up to 1400 A, 4-pole
Catalogue 33, page 279

Model No. SV 9342.004

60 mm bar centre distance,
for PLS special busbars.

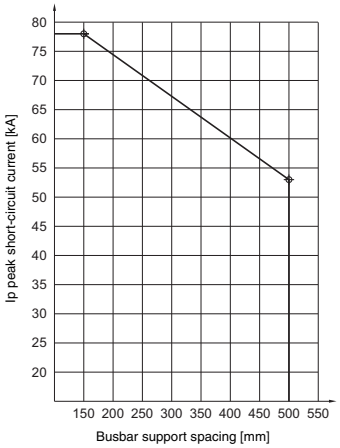

Settings I_{RMS} ($I_{eff.}$) of the test equipment without pre-fuse:

Busbar mm	Support spacing mm	RMS kA
PLS 1600	150	35
	500	25

Operating and ambient conditions for Ri4Power switchgear assemblies

Page 165 – 171

The siting conditions for Ri4Power systems are identical for all field types. Any requirements which deviate from this should be agreed with the product management team.

Operating and ambient conditions	Ambient temperature	Short-term peak	+40°C	EN 61 439-1 EN 61 439-2
		Maximum on a 24 h average	+35°C	
		Low	–5°C	
	Atmospheric conditions	Normal climatic stress		EN 61 439-1 EN 61 439-2
		Relative humidity	50% at 40°C 90% at 20°C (without condensation due to temperature fluctuations)	
			Operation up to 2000 m above sea level	

Additional field-specific technical data for the tested field types is listed in detail on the following pages. This data represents the maximum, tested figures.

For optimum adaptation of customer requirements to the possible system assemblies, we recommend use of the latest version of the Rittal Power Engineering software.

ISV-TS 8 enclosures

for distribution enclosures up to 1600 A

Catalogue 33, page 83

Busbar system			Maxi-PLS 1600	Flat copper 80 x 10 mm	
Electrical characteristics	Rated voltage	Rated insulation voltage U_i	1000 V		EN 61 439-1/-2
		Rated operating voltage U_e	690 V		
		Rated surge voltage resistance U_{imp}	8 kV		
		Overvoltage category	IV		
		Level of contamination	3		
		Rated frequency	50 Hz		
	Rated current (primary busbar)	Rated operating current I_e	1300 A	1200 A	For IP 55
			1600 A	1500 A	For IP 1X[1]
			1600 A	1600 A	For IP 54[2]
		Rated surge current resistance I_{pk}	105 kA		EN 61 439-1/-2
		Rated short-time current resistance I_{cw}	50 kA		
Mechanical characteristics	Dimensions	Enclosure width Enclosure height Enclosure depth	600/850 mm 2000 mm[3] 600 mm[3]		
		Pitch pattern	25 mm		
	Protection category		Max. IP 55		IEC 60 529
	Design		1		EN 61 439-1/-2
	Surface protection/ Material	Enclosure frame	Dipcoat-primed		
		Panels (roof plate, rear panel)	Dipcoat-primed, powder-coated in RAL 7035 on the outside		
		System attachment	Stainless steel		
		System rails and punched sections with mounting flanges	Sheet steel, zinc-plated		
	Busbar	Material	E-Cu, bare		
		External dimensions (cross-section)	45 x 45 mm (1000 mm²)	80 x 10 mm	
Operating and ambient conditions	Ambient temperature	Short-term peak	+40°C		EN 61 439-1/-2
		Maximum on a 24 h average	+35°C		
		Low	–5°C		
	Atmospheric conditions	Normal climatic stress			EN 61 439-1/-2
		Relative humidity	50% at 40°C		
			Operation up to 1000 m above sea level		

[1] Using spacer DK 7967.000 for raising the roof.
[2] Using fan-and-filter unit SK 3243.100 (500 m³/h) and outlet filter SK 3243.200.
[3] Other sizes available on request

System data

SV-TS 8 enclosures

for air circuit-breakers and moulded case circuit-breakers (ACB + MCCB)
Catalogue 33, page 84 – 88

Enclosures				
Mechanical characteristics	Dimensions	Enclosure width Enclosure height Enclosure depth	400/600/800 mm[3] 1800/2000/2200 mm[3] 600/800 mm[3]	
		Pitch pattern	25 mm	
	Protection category		Max. IP 54	IEC 60 529
	Design		1 – 4	EN 61 439-1/-2
	Surface protection/ Material	Enclosure frame	Dipcoat-primed	
		Panels (roof plate, rear panel)	Dipcoat-primed, powder-coated in RAL 7035 on the outside	
		System attachment	Stainless steel	
		System rails and punched sections with mounting flanges	Sheet steel, zinc-plated	

General ratings data				
Electrical characteristics	Rated voltage	Rated insulation voltage U_i	1000 V	EN 61 439-1/-2
		Rated operating voltage U_e	690 V	
		Rated surge voltage resistance U_{imp}	8 kV	
		Overvoltage category	IV	
		Level of contamination	3	
		Rated frequency	50 Hz	

Maxi-PLS busbar system			**Maxi-PLS 1600**	**Maxi-PLS 2000**	**Maxi-PLS 3200**	
Electrical characteristics	Rated current (primary busbar)	Rated operating current I_e[4]	1400 A	1800 A	2800 A	IP 54
			1600 A	2000 A	3000 A	IP 2X[1]
			1800 A	2500 A	4000 A	IP 2X[2]
		Rated surge current resistance I_{pk}	110 kA		220 kA	EN 61 439-1/-2
		Rated short-time current resistance I_{cw}	50 kA		100 kA	
	Testing under accidental arc conditions	Permissible prospective short-circuit current	50 kA		70 kA	EN 61 641
		Test voltage	420 V			
		Permissible arc duration	0.3 sec.			
Mechanical characteristics	Busbar	Material	E-Cu, bare			
		External dimensions (cross-section)	45 x 45 mm (1000 mm²)	45 x 45 mm (1380 mm²)	60 x 60 mm (2700 mm²)	

RiLine60 busbar system			**E-Cu 30 x 10 mm**	**PLS 1600**	
Electrical characteristics	Rated current (primary busbar)	Rated operating current I_e[4]	800 A	1150 A	IP 54
			860 A	1300 A	IP 43
			1000 A[5]	1600 A[2]	IP 2X
		Rated surge current resistance I_{pk}	68 kA	110 kA	EN 61 439-1/-2
		Rated short-time current resistance I_{cw}	32 kA, 1 sec.	50 kA, 1 sec./50 kA, 3 sec.	
	Testing under accidental arc conditions	Permissible prospective short-circuit current	30 kA	50 kA	EN 61 641
		Test voltage	690 V		
		Permissible arc duration	0.3 sec.		
Mechanical characteristics	Busbar	Material	E-Cu, bare		
		Version (cross-section)	30 x 10 mm (300 mm²)	PLS 1600 (900 mm²)	

Flat-PLS busbar system			**Flat-PLS 60**	**Flat-PLS 100**	
Electrical characteristics	Rated current (primary busbar)	Rated operating current I_e[4]	2360 A	3120 A	IP 54
			2540 A	3400 A	IP 43
			4100 A[2]	5500 A[2]	IP 2X
		Rated surge current resistance I_{pk}	154 kA	220 kA	EN 61 439-1/-2
		Rated short-time current resistance I_{cw}	70 kA, 1 sec.	100 kA, 1 sec.	
Mechanical characteristics	Busbar	Material	E-Cu, bare		
		Version (cross-section)	Up to 4 x 60 x 10 mm (max. 2400 mm²)	Up to 4 x 100 x 10 mm (max. 4000 mm²)	

[1] Using outlet filter SK 3243.600 and roof plate IP 2X.
[2] Using fan-and-filter unit SK 3244.100 (700 m³/h) and roof plate IP 2X.
[3] Other sizes available on request.
[4] Other rated currents for different protection categories on request.
[5] Using fan-and-filter unit SK 3241.100 (230 m³/h) and roof plate IP 2X.

SV-TS 8 enclosures

for coupling sections

Catalogue 33, page 84 – 88

Enclosures				
Mechanical characteristics	Dimensions	Enclosure width Enclosure height Enclosure depth	600/800/1000 mm[3] 2000/2200 mm[3] 600/800 mm[3]	
		Pitch pattern	25 mm	
	Protection category		Max. IP 54	IEC 60 529
	Design		1 – 4	EN 61 439-1/-2
	Surface protection/ Material	Enclosure frame	Dipcoat-primed	
		Panels (roof plate, rear panel)	Dipcoat-primed, powder-coated in RAL 7035 on the outside	
		System attachment	Stainless steel	
		System rails and punched sections with mounting flanges	Sheet steel, zinc-plated	

General ratings data				
Electrical characteristics	Rated voltage	Rated insulation voltage U_i	1000 V	EN 61 439-1/-2
		Rated operating voltage U_e	690 V	
		Rated surge voltage resistance U_{imp}	8 kV	
		Overvoltage category	IV	
		Level of contamination	3	
		Rated frequency	50 Hz	

Maxi-PLS busbar system			**Maxi-PLS 1600**	**Maxi-PLS 2000**	**Maxi-PLS 3200**	
Electrical characteristics	Rated current (primary busbar)	Rated operating current I_e[4]	1400 A	1800 A	2800 A	For IP 54
			1600 A	2000 A	3000 A	For IP 2X[1]
			1800 A	2500 A	4000 A	For IP 2X[2]
		Rated surge current resistance I_{pk}	110 kA		165 kA	EN 61 439-1/-2
		Rated short-time current resistance I_{cw}	50 kA		75 kA	
	Testing under accidental arc conditions	Permissible prospective short-circuit current	50 kA		70 kA	EN 61 641
		Test voltage	420 V			
		Permissible arc duration	0.3 sec.			
Mechanical characteristics	Busbar	Material	E-Cu, bare			
		External dimensions (cross-section)	45 x 45 mm (1000 mm²)	45 x 45 mm (1380 mm²)	60 x 60 mm (2700 mm²)	

RiLine60 busbar system			**E-Cu 30 x 10 mm**	**PLS 1600**	
Electrical characteristics	Rated current (primary busbar)	Rated operating current I_e[4]	800 A	1150 A	IP 54
			860 A	1300 A	IP 43
			1000 A[5]	1600 A[2]	IP 2X
		Rated surge current resistance I_{pk}	68 kA	110 kA	EN 61 439-1/-2
		Rated short-time current resistance I_{cw}	32 kA, 1 sec.	50 kA, 1 sec./50 kA, 3 sec.	
	Testing under accidental arc conditions	Permissible prospective short-circuit current	30 kA	50 kA	EN 61 641
		Test voltage	690 V		
		Permissible arc duration	0.3 sec.		
Mechanical characteristics	Busbar	Material	E-Cu, bare		
		Version (cross-section)	30 x 10 mm (300 mm²)	PLS 1600 (900 mm²)	

Flat-PLS busbar system			**Flat-PLS 60**	**Flat-PLS 100**	
Electrical characteristics	Rated current (primary busbar)	Rated operating current I_e[4]	2360 A	3120 A	IP 54
			2540 A	3400 A	IP 43
			4100 A[2]	5500 A[2]	IP 2X
		Rated surge current resistance I_{pk}	154 kA	220 kA	EN 61 439-1/-2
		Rated short-time current resistance I_{cw}	70 kA, 1 sec.	100 kA, 1 sec.	
Mechanical characteristics	Busbar	Material	E-Cu, bare		
		Version (cross-section)	Up to 4 x 60 x 10 mm (max. 2400 mm²)	Up to 4 x 100 x 10 mm (max. 4000 mm²)	

[1] Using outlet filter SK 3243.600 and roof plate IP 2X.
[2] Using fan-and-filter unit SK 3244.100 (700 m³/h) and roof plate IP 2X.
[3] Other sizes available on request.
[4] Other rated currents for different protection categories on request.
[5] Using fan-and-filter unit SK 3241.100 (230 m³/h) and roof plate IP 2X.

System data

SV-TS 8 enclosures

for modular outgoing sections

Catalogue 33, page 86 – 88

Enclosures				
Mechanical characteristics	Dimensions	Enclosure width Enclosure height Enclosure depth	400/600/800 mm[3] 1800/2000/2200 mm[3] 600/800 mm[3]	
		Pitch pattern	25 mm	
	Protection category		Max. IP 54	IEC 60 529
	Design		1 – 4	EN 61 439-1/-2
	Surface protection/ Material	Enclosure frame	Dipcoat-primed	
		Panels (roof plate, rear panel)	Dipcoat-primed, powder-coated in RAL 7035 on the outside	
		System attachment	Stainless steel	
		System rails and punched sections with mounting flanges	Sheet steel, zinc-plated	

General ratings data				
Electrical characteristics	Rated voltage	Rated insulation voltage U_i	1000 V	EN 61 439-1/-2
		Rated operating voltage U_e	690 V	
		Rated surge voltage resistance U_{imp}	8 kV	
		Overvoltage category	IV	
		Level of contamination	3	
		Rated frequency	50 Hz	

Maxi-PLS busbar system			**Maxi-PLS 1600**	**Maxi-PLS 2000**	**Maxi-PLS 3200**	
Electrical characteristics	Rated current (primary busbar)	Rated operating current I_e[4]	1400 A	1800 A	2800 A	For IP 54
			1600 A	2000 A	3000 A	For IP 2X[1]
			1800 A	2500 A	4000 A	For IP 2X[2]
		Rated surge current resistance I_{pk}	110 kA		220 kA	EN 61 439-1/-2
		Rated short-time current resistance I_{cw}	50 kA		100 kA	
	Testing under accidental arc conditions	Permissible prospective short-circuit current	50 kA		70 kA	EN 61 641
		Test voltage	690 V			
		Permissible arc duration	0.3 sec.			
Mechanical characteristics	Busbar	Material	E-Cu, bare			
		External dimensions (cross-section)	45 x 45 mm (1000 mm²)	45 x 45 mm (1380 mm²)	60 x 60 mm (2700 mm²)	

RiLine60 busbar system			**E-Cu 30 x 10 mm**	**PLS 1600**	
Electrical characteristics	Rated current (primary busbar)	Rated operating current I_e[4]	800 A	1150 A	IP 54
			860 A	1300 A	IP 43
			1000 A[5]	1600 A[2]	IP 2X
		Rated surge current resistance I_{pk}	68 kA	110 kA	EN 61 439-1/-2
		Rated short-time current resistance I_{cw}	32 kA, 1 sec.	50 kA, 1 sec./50 kA, 3 sec.	
	Rated current (distribution busbar)	Rated operating current I_e[4]	800 A	1600 A[6]	IP 54
			860 A	1600 A[6]	IP 43
			1000 A[5]	1600 A[2]	IP 2X
		Rated surge current resistance I_{pk}	68 kA	110 kA	EN 61 439-1/-2
		Rated short-time current resistance I_{cw}	32 kA, 1 sec.	50 kA, 1 sec./50 kA, 3 sec.	
	Testing under accidental arc conditions	Permissible prospective short-circuit current	30 kA	50 kA	EN 61 641
		Test voltage	690 V		
		Permissible arc duration	0.3 sec.		
Mechanical characteristics	Busbar	Material	E-Cu, bare		
		Version (cross-section)	30 x 10 mm (300 mm²)	PLS 1600 (900 mm²)	

Flat-PLS busbar system			**Flat-PLS 60**	**Flat-PLS 100**	
Electrical characteristics	Rated current (primary busbar)	Rated operating current I_e[4]	2360 A	3120 A	IP 54
			2540 A	3400 A	IP 43
			4100 A[2]	5500 A[2]	IP 2X
		Rated surge current resistance I_{pk}	154 kA	220 kA	
		Rated short-time current resistance I_{cw}	70 kA, 1 sec.	100 kA, 1 sec.	
Mechanical characteristics	Busbar	Material	E-Cu, bare		
		Version (cross-section)	Up to 4 x 60 x 10 mm (max. 2400 mm²)	Up to 4 x 100 x 10 mm (max. 4000 mm²)	

[1] Using outlet filter SK 3243.600 and roof plate IP 2X.
[2] Using fan-and-filter unit SK 3244.100 (700 m³/h) and roof plate IP 2X.
[3] Other sizes available on request.
[4] Other rated currents for different protection categories on request.
[5] Using fan-and-filter unit SK 3241.100 (230 m³/h) and roof plate IP 2X.
[6] In conjunction with RiLine60 as the main busbar system: Rated currents on request.

SV-TS 8 enclosures

for switch-disconnector-fuse sections

Catalogue 33, page 91/92

Enclosures				
Mechanical characteristics	Dimensions	Enclosure width Enclosure height Enclosure depth	1000/1200 mm[3] 2000/2200 mm[3] 600/800 mm[3]	
		Pitch pattern	25 mm	
	Protection category		Max. IP 31	IEC 60 529
	Design		1 – 4	EN 61 439-1/-2
	Surface protection/ Material	Enclosure frame	Dipcoat-primed	
		Panels (roof plate, rear panel)	Dipcoat-primed, powder-coated in RAL 7035 on the outside	
		System attachment	Stainless steel	
		System rails and punched sections with mounting flanges	Sheet steel, zinc-plated	

General ratings data				
Electrical characteristics	Rated voltage	Rated insulation voltage U_i	1000 V	EN 61 439-1/-2
		Rated operating voltage U_e	690 V	
		Rated surge voltage resistance U_{imp}	8 kV	
		Overvoltage category	IV	
		Level of contamination	3	
		Rated frequency	50 Hz	

Maxi-PLS busbar system			**Maxi-PLS 1600**	**Maxi-PLS 2000**	**Maxi-PLS 3200**	
Electrical characteristics	Rated current (primary busbar)	Rated operating current I_e[4]	1400 A	1800 A	2800 A	For IP 54
			1800 A	2500 A	4000 A	For IP 2X[1]
		Rated surge current resistance I_{pk}	110 kA		220 kA	EN 61 439-1/-2
		Rated short-time current resistance I_{cw}	50 kA		100 kA	
	Testing under accidental arc conditions	Permissible prospective short-circuit current	50 kA		70 kA	EN 61 641
		Test voltage	690 V			
		Permissible arc duration	0.3 sec.			
Mechanical characteristics	Busbar	Material	E-Cu, bare			
		External dimensions (cross-section)	45 x 45 mm (1000 mm²)	45 x 45 mm (1380 mm²)	60 x 60 mm (2700 mm²)	

Flat-PLS busbar system			**Flat-PLS 60**	**Flat-PLS 100**	
Electrical characteristics	Rated current (primary busbar)	Rated operating current I_e[4]	2360 A	3120 A	IP 54
			2540 A	3400 A	IP 43
			4100 A[2]	5500 A	IP 2X
		Rated surge current resistance I_{pk}	154 kA	220 kA	EN 61 439-1/-2
		Rated short-time current resistance I_{cw}	70 kA, 1 sec.	100 kA, 1 sec.	
Mechanical characteristics	Busbar	Material	E-Cu, bare		
		Version (cross-section)	Up to 4 x 60 x 10 mm (max. 2400 mm²)	Up to 4 x 100 x 10 mm (max. 4000 mm²)	

Flat-PLS distribution busbar system			**Flat-PLS**				
Electrical characteristics	Rated current (distribution busbar)	Rated operating current I_e[4]	1000 A	1250 A	1600 A	2100 A	IP 31
		Rated surge current resistance I_{pk}	154 kA	165 kA	187 kA	220 kA	EN 61 439-1/-2
		Rated short-time current resistance I_{cw}	70 kA, 1 sec.	75 kA, 1 sec.	85 kA, 1 sec.	100 kA, 1 sec.	
Mechanical characteristics	Busbar	Material	E-Cu, bare				
		Version (cross-section)	50 x 10 mm (500 mm²)	60 x 10 mm (600 mm²)	80 x 10 mm (800 mm²)	100 x 10 mm (1000 mm²)	

[1] Using roof plate IP 2X.
[2] Using fan-and-filter unit SK 3244.100 (700 m³/h) and roof plate IP 2X.
[3] Other sizes available on request.
[4] Other rated currents for different protection categories on request.

System data

SV-TS 8 enclosures

for cable chambers

Catalogue 33, page 89/90

Enclosures				
Mechanical characteristics	Dimensions	Enclosure width Enclosure height Enclosure depth	300/400/600 mm[3] 1800/2000/2200 mm[3] 600/800 mm[3]	
		Pitch pattern	25 mm	
	Protection category		Max. IP 54	IEC 60 529
	Design		1 – 4	EN 61 439-1/-2
	Surface protection/ Material	Enclosure frame	Dipcoat-primed	
		Panels (roof plate, rear panel)	Dipcoat-primed, powder-coated in RAL 7035 on the outside	
		System attachment	Stainless steel	
		System rails and punched sections with mounting flanges	Sheet steel, zinc-plated	

Maxi-PLS busbar system			**Maxi-PLS 1600**	**Maxi-PLS 2000**	**Maxi-PLS 3200**	
Electrical characteristics	Rated current (primary busbar)	Rated operating current I_e[4]	1400 A	1800 A	2800 A	For IP 54
			1600 A	2000 A	3000 A	For IP 2X[1]
			1800 A	2500 A	4000 A	For IP 2X[2]
		Rated surge current resistance I_{pk}	110 kA		220 kA	EN 61 439-1/-2
		Rated short-time current resistance I_{cw}	50 kA		100 kA	
	Testing under accidental arc conditions	Permissible prospective short-circuit current	50 kA		70 kA	EN 61 641
		Test voltage	420 V			
		Permissible arc duration	0.3 sec.			
Mechanical characteristics	Busbar	Material	E-Cu, bare			
		External dimensions (cross-section)	45 x 45 mm (1000 mm²)	45 x 45 mm (1380 mm²)	60 x 60 mm (2700 mm²)	

RiLine60 busbar system			**E-Cu 30 x 10 mm**	**PLS 1600**	
Electrical characteristics	Rated current (primary busbar)	Rated operating current I_e[4]	800 A	1150 A	IP 54
			860 A	1300 A	IP 43
			1000 A[5]	1600 A[2]	IP 2X
		Rated surge current resistance I_{pk}	68 kA	110 kA	EN 61 439-1/-2
		Rated short-time current resistance I_{cw}	32 kA, 1 sec.	50 kA, 1 sec./50 kA, 3 sec.	
	Testing under accidental arc conditions	Permissible prospective short-circuit current	30 kA	50 kA	EN 61 641
		Test voltage	690 V		
		Permissible arc duration	0.3 sec.		
Mechanical characteristics	Busbar	Material	E-Cu, bare		
		Version (cross-section)	30 x 10 mm (300 mm²)	PLS 1600 (900 mm²)	

Flat-PLS busbar system			**Flat-PLS 60**	**Flat-PLS 100**	
Electrical characteristics	Rated current (primary busbar)	Rated operating current I_e[4]	2360 A	3120 A	IP 54
			2540 A	3400 A	IP 43
			4100 A[2]	5500 A[2]	IP 2X
		Rated surge current resistance I_{pk}	154 kA	220 kA	EN 61 439-1/-2
		Rated short-time current resistance I_{cw}	70 kA, 1 sec.	100 kA, 1 sec.	
Mechanical characteristics	Busbar	Material	E-Cu, bare		
		Version (cross-section)	Up to 4 x 60 x 10 mm (max. 2400 mm²)	Up to 4 x 100 x 10 mm (max. 4000 mm²)	

[1] Using outlet filter SK 3243.600 and roof plate IP 2X.
[2] Using fan-and-filter unit SK 3244.100 (700 m³/h) and roof plate IP 2X.
[3] Other sizes available on request.
[4] Other rated currents for different protection categories on request.
[5] Using fan-and-filter unit SK 3241.100 (230 m³/h) and roof plate IP 2X.

SV-TS 8 enclosures

for busbar sections

Catalogue 33, page 89/90, 93

Enclosures				
Mechanical characteristics	Dimensions	Enclosure width Enclosure height Enclosure depth	200/300/400 mm[3] 1800/2000/2200 mm[3] 600/800 mm[3]	
		Pitch pattern	25 mm	
	Protection category		Max. IP 54	IEC 60 529
	Design		1 – 4	EN 61 439-1/-2
	Surface protection/ Material	Enclosure frame	Dipcoat-primed	
		Panels (roof plate, rear panel)	Dipcoat-primed, powder-coated in RAL 7035 on the outside	
		System attachment	Stainless steel	
		System rails and punched sections with mounting flanges	Sheet steel, zinc-plated	

General ratings data				
Electrical characteristics	Rated voltage	Rated insulation voltage U_i	1000 V	EN 61 439-1/-2
		Rated operating voltage U_e	690 V	
		Rated surge voltage resistance U_{imp}	8 kV	
		Overvoltage category	IV	
		Level of contamination	3	
		Rated frequency	50 Hz	

Maxi-PLS busbar system[6]			**Maxi-PLS 1600**	**Maxi-PLS 2000**	**Maxi-PLS 3200**	
Electrical characteristics	Rated current (primary busbar)	Rated operating current I_e[4]	1400 A	1800 A	2800 A	For IP 54
			1600 A	2000 A	3000 A	For IP 2X[1]
			1800 A	2500 A	4000 A	For IP 2X[2]
		Rated surge current resistance I_{pk}	110 kA		165 kA	EN 61 439-1/-2
		Rated short-time current resistance I_{cw}	50 kA		75 kA	
	Testing under accidental arc conditions	Permissible prospective short-circuit current	50 kA		70 kA	EN 61 641
		Test voltage	420 V			
		Permissible arc duration	0.3 sec.			
Mechanical characteristics	Busbar	Material	E-Cu, bare			
		External dimensions (cross-section)	45 x 45 mm (1000 mm²)	45 x 45 mm (1380 mm²)	60 x 60 mm (2700 mm²)	

RiLine60 busbar system[6]			**E-Cu 30 x 10 mm**	**PLS 1600**	
Electrical characteristics	Rated current (primary busbar)	Rated operating current I_e[4]	800 A	1150 A	IP 54
			860 A	1300 A	IP 43
			1000 A[5]	1600 A[2]	IP 2X
		Rated surge current resistance I_{pk}	68 kA	110 kA	EN 61 439-1/-2
		Rated short-time current resistance I_{cw}	32 kA, 1 sec.	50 kA, 1 sec./50 kA, 3 sec.	
	Testing under accidental arc conditions	Permissible prospective short-circuit current	30 kA	50 kA	EN 61 641
		Test voltage	690 V		
		Permissible arc duration	0.3 sec.		
Mechanical characteristics	Busbar	Material	E-Cu, bare		
		Version (cross-section)	30 x 10 mm (300 mm²)	PLS 1600 (900 mm²)	

Flat-PLS busbar system[6]			**Flat-PLS 60**	**Flat-PLS 100**	
Electrical characteristics	Rated current (primary busbar)	Rated operating current I_e[4]	2360 A	3120 A	IP 54
			2540 A	3400 A	IP 43
			4100 A[2]	5500 A[2]	IP 2X
		Rated surge current resistance I_{pk}	154 kA	220 kA	
		Rated short-time current resistance I_{cw}	70 kA, 1 sec.	100 kA, 1 sec.	
Mechanical characteristics	Busbar	Material	E-Cu, bare		
		Version (cross-section)	Up to 4 x 60 x 10 mm (max. 2400 mm²)	Up to 4 x 100 x 10 mm (max. 4000 mm²)	

[1] Using outlet filter SK 3243.600 and roof plate IP 2X.
[2] Using fan-and-filter unit SK 3244.100 (700 m³/h) and roof plate IP 2X.
[3] Other sizes available on request.
[4] Other rated currents for different protection categories on request.
[5] Using fan-and-filter unit SK 3241.100 (230 m³/h) and roof plate IP 2X.
[6] Usability of the various busbar systems depends on the enclosure width.

Overview of approvals and assembly data for applications to UL (RiLine60)

Model No. SV	c UL us LISTED	c UL us LISTED				Rated current	Rated voltage	Connection cross-sections	Tightening torque		
	E191125	E235931	E191125	E235931	E195144				Round conductors	Laminated copper bar	Others
3086.000			■								
3087.000			■								
3088.000			■								
3090.000			■								
3091.000			■								
3092.000			■								
3450.500			■					1 – 4 mm²			
3451.500			■					2.5 – 16 mm²			
3452.500			■					16 – 50 mm²			
3453.500			■					35 – 70 mm²			
3454.500			■					70 – 185 mm²			
3455.500			■					1 – 4 mm²			
3456.500			■					2.5 – 16 mm²			
3457.500			■					16 – 50 mm²			
3458.500			■					35 – 70 mm²			
3459.500			■					70 – 185 mm²			
3460.500			■								
3504.000			■								CMS 15 Nm
3505.000			■								CMS 15 Nm
3509.000			■			700 A					
3514.000			■								CMS 20 Nm
3515.000			■								CMS 20 Nm
3516.000			■			1400 A					
3524.000			■			700 A					
3525.000			■			700 A					
3525.010			■			700 A					
3526.000			■			700 A					
3527.000			■			1400 A					
3528.000			■			1400 A					
3528.010			■			1400 A					
3529.000			■			1400 A					
3548.000			■								
3549.000			■								
3550.000			■					1 – 4 mm²			
3555.000			■					1 – 4 mm²			
3563.000			■								
3580.000			■			140 A					
3580.100			■			280 A					
3581.000			■			175 A					
3581.100			■			350 A					
3582.000			■			230 A					
3583.000			■			290 A					
3584.000			■			350 A					
3585.000			■			465 A					
3586.000			■			700 A					
9320.020			■								
9320.030			■								
9320.040			■								
9320.050			■								
9320.060			■								
9320.070			■								
9320.090			■								
9320.120			■								
9320.150			■								
9340.004	■										BMS 3 Nm CMS 5 Nm
9340.050	■										BMS 3 Nm CMS 5 Nm
9340.070	■										
9340.074	■										
9340.100	■										
9340.110	■										

Listed components for feeder-circuits up to 600 V AC **TS** = terminal screw **CCC** = Conductor connection clamp
CMS = Component mounting screw **BMS** = Busbar mounting screw
Conversion factor: 1 Nm = 8.851 in-lbs **s** = stranded **sol** = solid **Lam. Cu** = Laminated copper bar (Flexibar)

Overview of approvals and assembly data for applications to UL (RiLine60)

Model No. SV	E191125	E235931	E191125	E235931	E195144	Rated current	Rated voltage	Connection cross-sections	Tightening torque		
									Round conductors	Laminated copper bar	Others
9340.120	■										
9340.130	■										
9340.134	■										
9340.140	■										
9340.200	■										
9340.210	■										
9340.214	■										
9340.220	■										
9340.224	■										
9340.260	■										
9340.270	■										
9340.280	■										
9340.290	■										
9340.310	■					25 A	600 V AC	AWG 12			
9340.340	■					25 A	600 V AC	AWG 12			
9340.350	■					30 A	600 V AC	AWG 10			
9340.370	■					25 A	600 V AC	AWG 12			
9340.380	■					30 A	600 V AC	AWG 10			
9340.410	■					60 A	600 V AC	AWG 6			
9340.430	■					60 A	600 V AC	AWG 6			
9340.450	■					60 A	600 V AC	AWG 6			
9340.460	■					30 A	600 V AC	AWG 10			
9340.470	■					30 A	600 V AC	AWG 10			
9340.700	■					60 A	600 V AC	AWG 6			
9340.710	■					40 A	600 V AC	AWG 8			
9341.050	■										BMS 0.7 Nm CMS 5 Nm
9341.070	■										
9341.100	■										
9341.110	■										
9341.120	■										
9341.130	■										
9341.140	■										
9342.004	■										BMS 7 Nm CMS 5 Nm
9342.014	■										BMS 7 Nm CMS 5 Nm
9342.050	■										BMS 0.7 Nm
9342.070	■										
9342.074	■										
9342.100	■										
9342.110	■										
9342.120	■										
9342.130	■										
9342.134	■										
9342.140	■										
9342.200	■					60 A	600 V AC	AWG 6 – 10	5 Nm		
9342.210	■					60 A	600 V AC	AWG 6 – 10	5 Nm		
9342.220			■			125 A	600 V AC	AWG 2 – 6	5 Nm		
9342.224	■					125 A	600 V AC	AWG 2 – 6	5 Nm		
9342.230	■					125 A	600 V AC	AWG 2 – 6	5 Nm		
9342.234	■					125 A	600 V AC	AWG 2 – 6	5 Nm		
9342.240	■					125 A	600 V AC	AWG 2 – 6	5 Nm		
9342.244	■					125 A	600 V AC	AWG 2 – 6	5 Nm		
9342.250	■					250 A	600 V AC	AWG 2 – MCM 250	12 Nm	12 Nm	
9342.254	■					250 A	600 V AC	AWG 2 – MCM 250	12 Nm	12 Nm	
9342.260	■					250 A	600 V AC	AWG 2 – MCM 250	12 Nm	12 Nm	
9342.270	■					250 A	600 V AC	AWG 2 – MCM 250	12 Nm	12 Nm	
9342.274	■					250 A	600 V AC	AWG 2 – MCM 250	12 Nm	12 Nm	
9342.280			■			600 A	600 V AC	AWG 4/0 – MCM 600	18 Nm	18 Nm	
9342.290	■					600 A	600 V AC	AWG 4/0 – MCM 600	18 Nm	18 Nm	

Listed components for feeder-circuits up to 600 V AC **TS** = terminal screw **CCC** = Conductor connection clamp
CMS = Component mounting screw **BMS** = Busbar mounting screw
Conversion factor: 1 Nm = 8.851 in-lbs **s** = stranded **sol** = solid **Lam. Cu** = Laminated copper bar (Flexibar)

Overview of approvals and assembly data for applications to UL (RiLine60)

Model No. SV	E191125	E235931	E191125	E235931	E195144	Rated current	Rated voltage	Connection cross-sections	Tightening torque		
									Round conductors	Laminated copper bar	Others
9342.300	■					600 A	600 V AC	AWG 4/0 – MCM 600 Lam. E-Cu 10 x 32 x 1	18 Nm	18 Nm	
9342.310	■					700 A	600 V AC	AWG 4/0 – MCM 600 Lam. E-Cu 10 x 32 x 1	16.5 Nm	16.5 Nm	
9342.314	■					700 A	600 V AC	AWG 4/0 – MCM 600 Lam. E-Cu 10 x 32 x 1	16.5 Nm	16.5 Nm	
9342.320	■					1400 A	600 V AC	Lam. Cu 10 x 63 x 1 mm	–	22 Nm	
9342.324	■					1400 A	600 V AC		–	22 Nm	
9342.400	■					100 A	600 V AC	AWG 2 – 6	5 Nm	–	
9342.410	■					100 A	600 V AC	AWG 2 – 6	5 Nm	–	
9342.504	■					125 A	600 V AC	AWG 2 – MCM 250 Lam. Cu 10 x 15.5 x 0.8 mm	12 Nm	12 Nm	
9342.514	■					125 A	600 V AC	AWG 2 – MCM 250 Lam. Cu 10 x 15.5 x 0.8 mm	12 Nm	12 Nm	
9342.540	■					125 A	600 V AC	AWG 2 – MCM 250 Lam. Cu 10 x 15.5 x 0.8 mm	12 Nm	12 Nm	
9342.550	■					125 A	600 V AC	AWG 2 – MCM 250 Lam. Cu 10 x 15.5 x 0.8 mm	12 Nm	12 Nm	
9342.600	■					250 A	600 V AC	AWG 2 – MCM 250 Lam. Cu 10 x 15.5 x 0.8 mm	12 Nm	12 Nm	
9342.604	■					250 A	600 V AC	AWG 2 – MCM 250 Lam. Cu 10 x 15.5 x 0.8 mm	12 Nm	12 Nm	
9342.610	■					250 A	600 V AC	AWG 2 – MCM 250 Lam. Cu 10 x 15.5 x 0.8 mm	12 Nm	12 Nm	
9342.614	■					250 A	600 V AC	AWG 2 – MCM 250 Lam. Cu 10 x 15.5 x 0.8 mm	12 Nm	12 Nm	
9342.700	■					600 A	600 V AC	Lam. Cu 10 x 32 x 1 mm	30 Nm	30 Nm	
9342.710	■					600 A	600 V AC	Lam. Cu 10 x 32 x 1 mm	30 Nm	30 Nm	
9342.720	■										
9343.000				■ [1]		160 A	600 V AC		CCC: 4.5 Nm	CCC: 4.5 Nm	CMS 6 Nm
9343.010				■ [1]		160 A	600 V AC		TS: 12 Nm	TS: 12 Nm	CMS 6 Nm
9343.100				■ [1]		250 A	600 V AC		CCC: 12 Nm	CCC: 12 Nm	CMS 6 Nm
9343.110				■ [1]		250 A	600 V AC		TS: 20 Nm	TS: 20 Nm	CMS 6 Nm
9343.200				■ [1]		400 A	600 V AC		CCC: 20 Nm	CCC: 20 Nm	CMS 8 Nm
9343.210				■ [1]		400 A	600 V AC		TS: 20 Nm	TS: 20 Nm	CMS 8 Nm
9343.300				■ [1]		630 A	600 V AC		CCC: 20 Nm	CCC: 20 Nm	CMS 8 Nm
9343.310				■ [1]		630 A	600 V AC		TS: 20 Nm	TS: 20 Nm	CMS 8 Nm
9344.000				■ [1]		160 A	600 V AC		CCC: 4.5 Nm	CCC: 4.5 Nm	
9344.010				■ [1]		160 A	600 V AC		TS: 12 Nm	TS: 12 Nm	
9344.100				■ [1]		250 A	600 V AC		CCC: 12 Nm	CCC: 12 Nm	
9344.110				■ [1]		250 A	600 V AC		TS: 20 Nm	TS: 20 Nm	
9344.200				■ [1]		400 A	600 V AC		CCC: 20 Nm	CCC: 20 Nm	
9344.210				■ [1]		400 A	600 V AC		TS: 20 Nm	TS: 20 Nm	
9344.300				■ [1]		630 A	600 V AC		CCC: 20 Nm	CCC: 20 Nm	
9344.310				■ [1]		630 A	600 V AC		TS: 20 Nm	TS: 20 Nm	
9345.000		■				30 A	600 V AC	AWG 6 – 14	2 Nm		
9345.010		■				30 A	600 V AC	AWG 2 – 14	4 Nm		
9345.030		■				60 A	600 V AC	AWG 2 – 14	5 Nm		
9345.100				■		61 – 100	600 V AC		CCC: 12 Nm		CMS 6 Nm
9345.110				■		61 – 100	600 V AC		CCC: 12 Nm		
9345.200				■		101 – 200	600 V AC		CCC: 20 Nm		CMS 8 Nm
9345.210				■		101 – 200	600 V AC		CCC: 20 Nm		
9345.400				■		201 – 400 A	600 V AC		CCC: 20 Nm		CMS 8 Nm
9345.410				■		201 – 400 A	600 V AC		CCC: 20 Nm		

Listed components for feeder-circuits up to 600 V AC **TS** = terminal screw **CCC** = Conductor connection clamp
CMS = Component mounting screw **BMS** = Busbar mounting screw
Conversion factor: 1 Nm = 8.851 in-lbs **s** = stranded **sol** = solid **Lam. Cu** = Laminated copper bar (Flexibar)
[1] For the use of "Special Purpose Fuses"

Mini-PLS busbar supports (3-pole)

Catalogue 33, page 270

40 mm bar centre distance **Approvals:** E191125	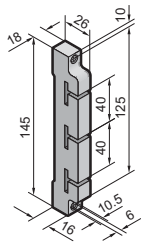
Model No. SV	**9600.000**

Mini-PLS special busbars E-Cu and busbar connectors

Catalogue 33, page 270

Approvals: E191125	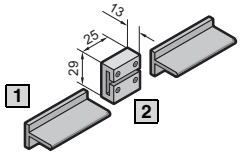				
	1 Busbar (bar cross-section 120 mm², bar thickness 3 mm)				2 Busbar connectors
Model No. SV	**9601.000**	**9602.000**	**9603.000**	**9624.000**	**9611.000**
Length mm	500	700	1100	1500	–
Tightening torque Nm	–				max. 2

Mini-PLS contact hazard protection

Catalogue 33, page 270

Approvals: E191125	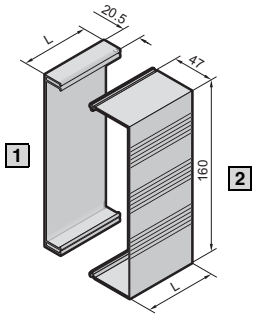				
	1 Base tray			2 Cover section	
Model No. SV	**9605.000**	**9606.000**	**9607.000**	**9608.000**	**9609.000**
Length (L) mm	500	700	1100	250	500

Mini-PLS busbar system (40 mm)

Mini-PLS busbar connection adaptors (3-pole)

Catalogue 33, page 270

Cable outlet top/bottom **Note:** Technical information on conductor connections, see page 149. **Approvals:** E191125		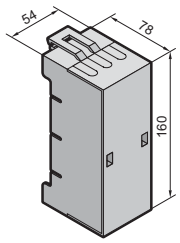	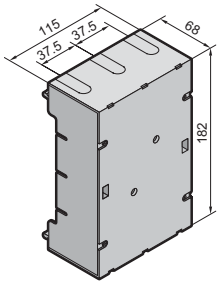
Rated current up to		63 A	250 A
Rated operating voltage	IEC	690 V AC	690 V AC
	UL	600 V AC	600 V AC
Model No. SV		**9613.000**	**9612.000**
Assembly data			
Tightening torque Nm Terminal screw		3	6
Connection of round conductors mm²		1.5 – 35	10 – 120
Clamping area for laminated copper bars W x H mm		10 x 8	17 x 15

Mini-PLS fuse elements (3-pole)

Catalogue 33, page 271

Note: Further technical information on SV 3431.000, see page 193.	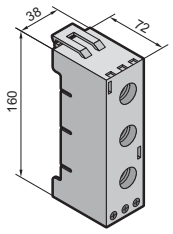	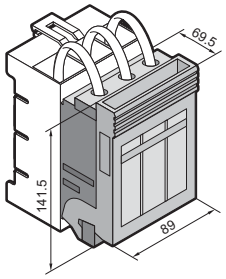	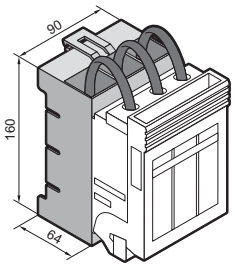
Components	Bus-mounting fuse base	NH fuse-switch disconnector	Busbar adaptor for disconnector
Fuse insert	D 02-E 18	–	–
Rated current	63 A	100 A	–
Rated operating voltage	400 V AC	690 V AC	–
Model No. SV	**9630.000**	**3431.000**	**9629.100**
Assembly data			
Tightening torque Nm Box terminal	2.5	3	–
Connection of round conductors mm²	1.5 – 16[1)]	1.5 – 50	–
With connection cables mm²	–	–	35
Clamping area for laminated copper bars W x H mm	–	10 x 10	–

[1)] Wire end ferrules should be used with fine and extra-fine wire conductors (f).

Mini-PLS component adaptors 12 A/25 A (3-pole)

Catalogue 33, page 272

Note:
Technical information on current carrying capacity of connection cables, see page 150.

Approvals:
E191125

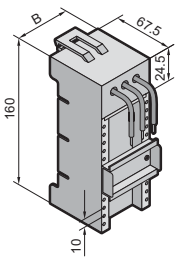

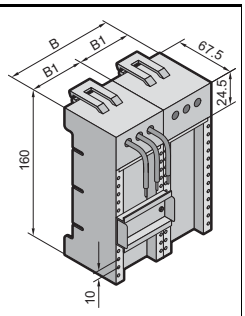

Width (B) mm		45	45	45	54	54	72	72	90	108
Width (B1) mm		–	–	–	–	–	–	–	45	54
Rated current up to		12 A	25 A	25 A	25 A	25 A	25 A	25 A	25 A	25 A
Rated operating voltage	IEC	690 V AC	690 V AC	690 V AC	690 V AC	690 V AC	690 V AC	690 V AC	690 V AC	690 V AC
	UL	–	–	–	600 V AC	600 V AC	600 V AC	600 V AC	–	–
Connection cables		AWG 14	AWG 12	AWG 12	AWG 12	AWG 12	AWG 12	AWG 12	AWG 12	AWG 12
Support rails height mm		7.5	7.5	15	7.5	15	7.5	15	7.5	7.5
Model No. SV		**9614.110**	**9614.100**	**9615.100**	**9614.000**	**9615.000**	**9625.000**	**9626.000**	**9629.010**	**9629.030**

Mini-PLS component adaptors 40 A/100 A (3-pole)

Catalogue 33, page 273

Note:
Technical information on current carrying capacity of connection cables, see page 150.

Approvals:
E191125

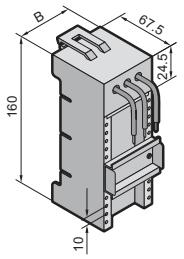

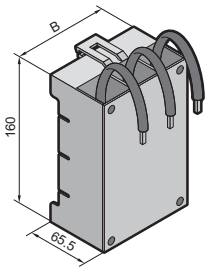

Width (B) mm		54	54	72	72	90
Rated current up to		40 A	40 A	40 A	40 A	100 A
Rated operating voltage	IEC	690 V AC	690 V AC	690 V AC	690 V AC	690 V AC
	UL	600 V AC	600 V AC	600 V AC	600 V AC	–
Connection cables		AWG 10	AWG 10	AWG 10	AWG 10	35 mm²
Support rails height mm		7.5	15	7.5	15	–
Model No. SV		**9616.000**	**9617.000**	**9627.000**	**9628.000**	**9629.000**

RiLine60 busbar systems 800 A (60 mm)

Flat copper bar systems

Catalogue 33, page 276/277

Technical information
for the calculation
of rated currents
to DIN 43 671,
see page 152/153.

Approvals:

c UL us LISTED
E191125

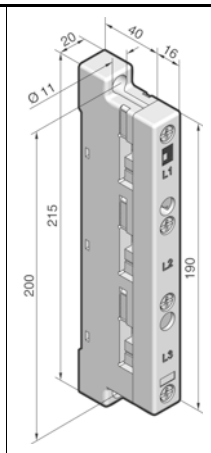

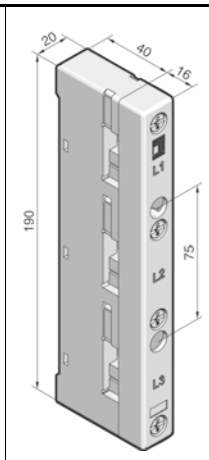

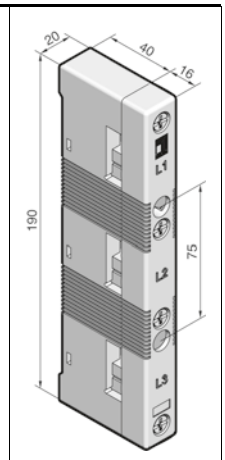

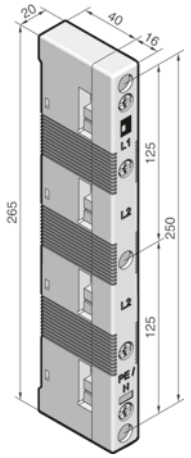

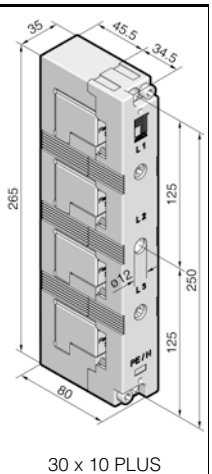

30 x 10 PLUS

Number of poles		3-pole			4-pole	
Bar centre distance mm		60			60	
For busbars mm	12 x 5/10[1]	■	■	–	■	–
	15 x 5 – 25 x 10, 30 x 5	■	■	■	■	–
	30 x 10	■	■	■	■	■
For application		IEC	IEC	UL	IEC/UL	IEC/UL
Model No. SV		**9340.010**	**9340.000**	**9340.050[2]** (UL)	**9340.004[2]** (UL)	**9342.014[2]** (UL)
Assembly data for applications to IEC (EN)/UL						
Tightening torque Nm						
– Assembly screw						
M5 x 16		5	5	5	–	–
M5 x 25		–	–	–	5	–
M6 x 25		–	–	–	–	5
– Cover attachment		3	3	3	3	7

[1] If 12 x 5/10 mm busbars are used, the spacer SV 9340.090 is additionally required.
[2] The use of a base tray is required for UL applications.

PLS busbar systems

Catalogue 33, page 278/279

Technical information
for the calculation
of rated currents
to DIN 43 671,
see page 152/153.

Approvals:

c UL us LISTED
E191125

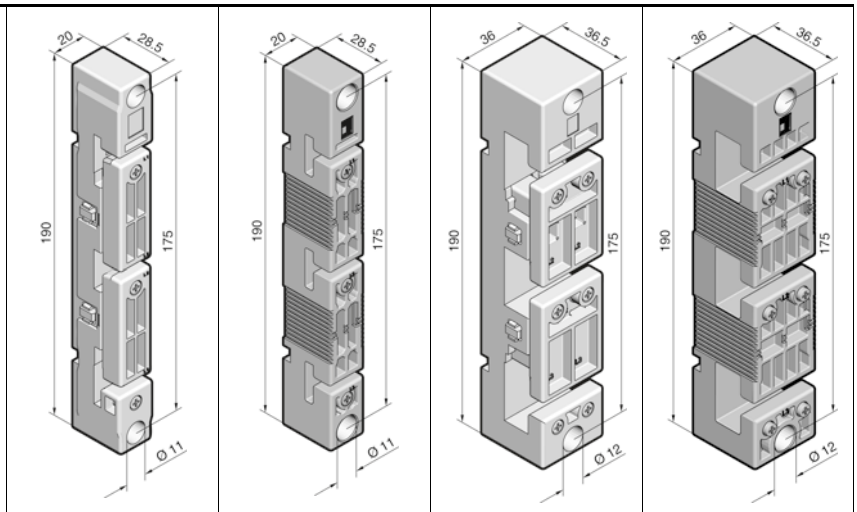

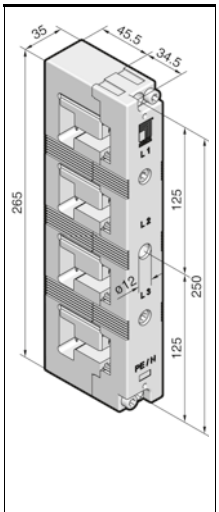

For Rittal system	PLS 800		PLS 1600		PLS 1600 PLUS
Number of poles	3-pole		3-pole		4-pole
Bar centre distance mm	60		60		60
For application	IEC	UL	IEC	UL	IEC/UL
Model No. SV	**9341.000**	**9341.050[1)]** (UL)	**9342.000**	**9342.050[1)]** (UL)	**9342.004[1)]** (UL)
Tightening torque Nm					
– Assembly screw					
M6 x 16	5	5	–	–	–
M6 x 25	–	–	5	5	5
– Busbar anti-slip guard	0.7	0.7	0.7	0.7	–
– Cover attachment	–	–	–	–	7

[1)] The use of a base tray is required for UL applications.

RiLine60 connection system

Connection adaptors

Catalogue 33, page 280/281

For 60 mm busbar systems

Note:
Technical information on conductor connections, see page 149.

Approvals:

c UL us LISTED E191125

E191125

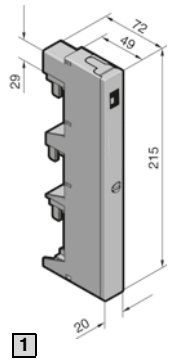

1

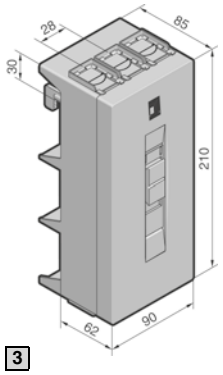

3

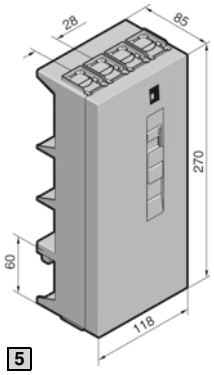

5

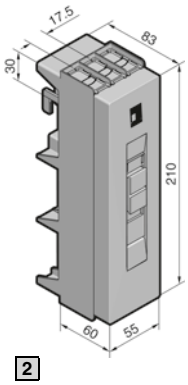

2

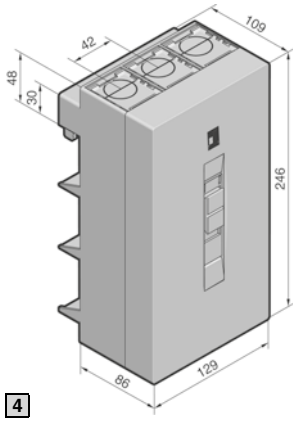

4

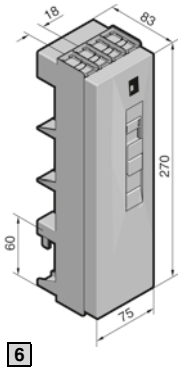

6

Design		3-pole				4-pole	
		1	2	3	4	5	6
Rated current max.	IEC	63 A	125 A[1]	250 A[1]	800 A	125 A	250 A
	UL	60 A	125 A	250 A	600 A	125 A	250 A
Rated operating voltage	IEC	690 V AC	690 V AC	690 V AC	690 V AC	690 V AC	690 V AC
	UL	600 V AC	600 V AC	600 V AC	600 V AC	600 V AC	600 V AC
		Model No. SV				**Model No. SV**	
Cable outlet	Top/bottom	**–**	**9342.220**	**9342.250**	**9342.280**	**9342.224**	**9342.254**
	Top	**9342.200**	**9342.230**	**9342.260**	**9342.290**	**–**	**–**
	Bottom	**9342.210**	**9342.240**	**9342.270**	**9342.300**	**9342.244**	**9342.274**
Assembly data for applications to IEC (EN)							
Tightening torque Nm – Rail attachment – Terminal screw		2 2.5	2 3	6 12	6 14	2 3	6 12
Conductor connection mm² – f with wire end ferrule – re – rm		2.5 – 10 2.5 – 10 2.5 – 10	10 – 25 – 16 – 35	35 – 120 – 35 – 120	95 – 185 – 95 – 300	10 – 25 – 16 – 35	35 – 120 – 35 – 120
Clamping area for laminated copper bars W x H mm		–	10 x 7.8	18.5 x 15.5	33 x 20	10 x 7.8	18.5 x 15.5
Assembly data for applications to UL							
Tightening torque Nm – Rail attachment – Terminal screw		2 5	2 5	6 12	6 18	2 5	6 12
Conductor connection Cu		AWG 6 – 10	AWG 2 – 6	AWG 2 – MCM 250	AWG 4/0 – MCM 600	AWG 2 – 6	AWG 2 – MCM 250
Connection of laminated copper bars mm		–	–	–	10 x 32 x 1[2]	–	–
Material specifications							
Contact track: E-Cu, nickel-plated		■	■	■	■	■	■
Conductor connection clamp	Sheet steel, zinc-plated	■	■	–	–	■	–
	Cast brass, nickel-plated	–	–	■	■	–	■

[1] Higher rated currents for laminated copper bars available on request.
[2] Number of membranes x membrane width x membrane thickness

Connection adaptors

Catalogue 33, page 282

For 60 mm busbar systems

Note:
Technical information on conductor connections, see page 149.

SV 3439.010
When connecting round conductors 300 mm² with ring terminals, the terminal clamps fitted as standard in the busbar connection adaptors must be replaced with screws and/or bolts M10 (tightening torque 20 Nm).

Approvals:

c UL us LISTED E191125

E191125

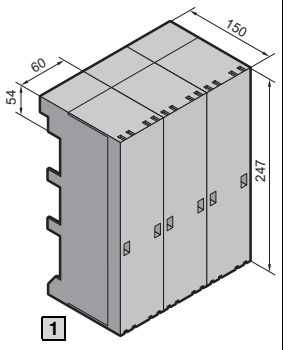

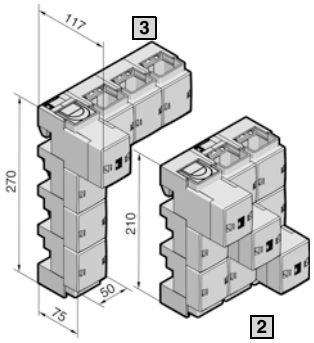

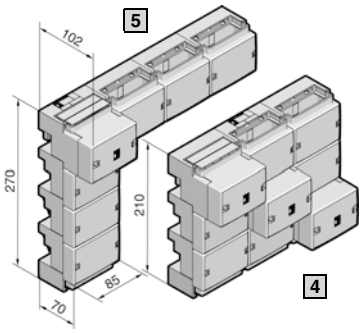

		1	2	3	4	5
Design		3-pole	3-pole	Expansion set for 4-pole configuration	3-pole	Expansion set for 4-pole configuration
Rated current max.	IEC	600 A	800 A	800 A	1600 A	1600 A
	UL	–	700 A	700 A	1400 A	1400 A
Rated operating voltage	IEC	690 V AC	690 V AC	690 V AC	690 V AC	690 V AC
	UL	–	600 V AC	600 V AC	600 V AC	600 V AC
		Model No. SV	**Model No. SV**		**Model No. SV**	
Cable outlet top/bottom		**3439.010**	**9342.310** (UL)	**9342.314** (UL)	**9342.320** (UL)	**9342.324** (UL)
Assembly data for applications to IEC (EN)						
Tightening torque Nm – Rail attachment – Terminal screw		 20 15	 – 14		 – 20	
Conductor connectionCu mm² – f with wire end ferrule – rm		 35 – 240 35 – 240	 95 – 185[1)] 95 – 300		 – –	
Clamping area for laminated copper bars W x H mm – For 5 mm bar thickness – For 10 mm bar thickness		 24 x 21 24 x 21	 33 x 26 33 x 21		 65 x 27 65 x 22	
Assembly data for applications to UL						
Tightening torque Nm – Terminal screw		 –	 16.5		 22	
Conductor connection Cu		–	AWG 4/0 – MCM 600		–	
Connection of laminated copper bars mm		–	10 x 32 x 1[2)]		10 x 63 x 1[2)]	
Material specifications						
Contact track: E-Cu, silver-plated		■	■		■	
Conductor connection clamp	Cast brass, nickel-plated	■	■		–	
	Stainless steel	–	–		■	

[1)] Fine-wire without wire end ferrule up to 240 mm². Tightening torque 20 Nm.
[2)] Number of membranes x membrane width x membrane thickness.

RiLine60 component adaptors

OM adaptors 25 A/32 A with connection cables (3-pole)

Catalogue 33, page 283

For 60 mm busbar systems

Note:
– Technical information on current carrying capacity of connection cables, see page 150.
– Maximum continuous operating temperature of the connection cables of the adaptor: 105°C.

Approvals:

c UL us LISTED
E191125

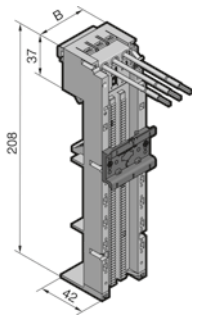

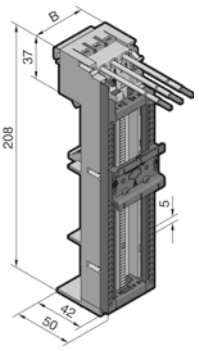

Width (B) mm		45	45	45	55
Rated current max.	IEC	25 A	25 A	32 A	32 A
	UL	25 A	25 A	30 A	30 A
Rated operating voltage	IEC	690 V AC	690 V AC	690 V AC	690 V AC
	UL	600 V AC	600 V AC	600 V AC	600 V AC
Connection cables Length (mm)		AWG 12 (130)	AWG 12 (130)	AWG 10 (130)	AWG 10 (130)
Support rails height mm		10	10	10	10
Model No. SV		**9340.310**	**9340.340**	**9340.350**	**9340.460**

For 60 mm busbar systems

Note:
– Technical information on current carrying capacity of connection cables, see page 150.
– Maximum continuous operating temperature of the connection cables of the adaptor: 105°C.

Approvals:

c UL us LISTED
E191125

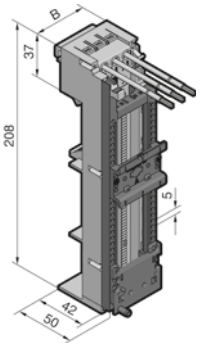

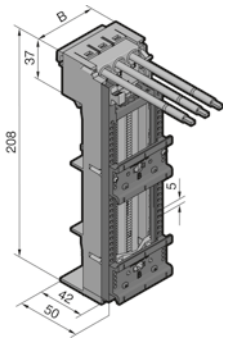

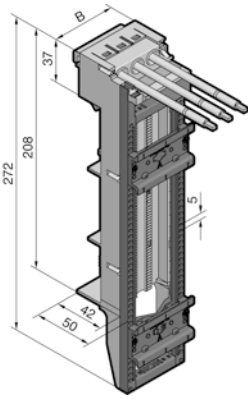

Width (B) mm		45	45	55	45
Rated current max.	IEC	25 A	32 A	32 A	32 A
	UL	25 A	30 A	30 A	30 A
Rated operating voltage	IEC	690 V AC	690 V AC	690 V AC	690 V AC
	UL	600 V AC	600 V AC	600 V AC	600 V AC
Connection cables Length (mm)		AWG 12 (130)	AWG 10 (130)	AWG 10 (130)	AWG 10 (130)
Support rails height mm		10	10	10	10
Model No. SV		**9340.370**	**9340.380**	**9340.470**	**9340.390**

OM adaptors 40 A/65 A with connection cables (3-pole)

Catalogue 33, page 284

For 60 mm busbar systems **Note:** – Technical information on current carrying capacity of connection cables, see page 150. – Maximum continuous operating temperature of the connection cables of the adaptor: 105°C. **Approvals:** c UL us LISTED E191125		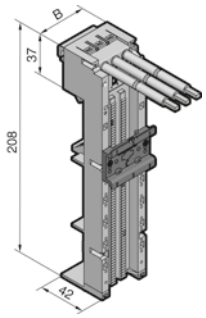	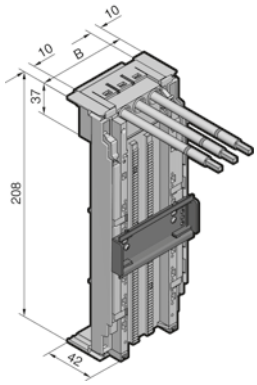	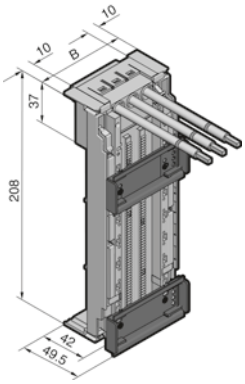
Width (B) mm		55	75	75
With insert strips		–	■	■
Rated current max.	IEC	65 A[1)]	65 A[1)]	40 A
	UL	60 A	60 A	40 A
Rated operating voltage	IEC	690 V AC	690 V AC	690 V AC
	UL	600 V AC	600 V AC	600 V AC
Connection cables Length (mm)		AWG 6 (130)	AWG 6 (130)	AWG 8 (130)
Support rails height mm		10	7.5	7.5
Model No. SV		**9340.410**	**9340.700**	**9340.710**

[1)] According to a heat dissipation test to IEC 61 439-1, a current carrying capacity of up to 80 A is supported.

For 60 mm busbar systems **Note:** – Technical information on current carrying capacity of connection cables, see page 150. – Maximum continuous operating temperature of the connection cables of the adaptor: 105°C. **Approvals:** c UL us LISTED E191125		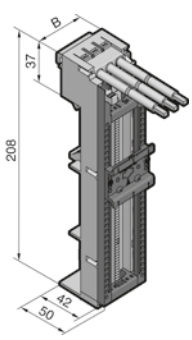		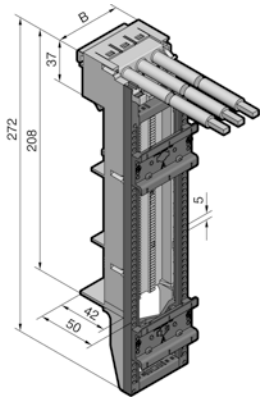	
Width (B) mm		55	55	55	55
With insert strips		–	–	–	–
Rated current max.	IEC	40 A	65 A[1)]	40 A	65 A[1)]
	UL	40 A	60 A	40 A	60 A
Rated operating voltage	IEC	690 V AC	690 V AC	690 V AC	690 V AC
	UL	600 V AC	600 V AC	600 V AC	600 V AC
Connection cables Length (mm)		AWG 8 (130)	AWG 6 (130)	AWG 8 (130)	AWG 6 (130)
Support rails height mm		10	10	10	10
Model No. SV		**9340.720**	**9340.430**	**9340.730**	**9340.450**

[1)] According to a heat dissipation test to IEC 61 439-1, a current carrying capacity of up to 80 A is supported.

RiLine60 component adaptors

OM adaptors 32 A with tension spring clamp (3-pole)

Catalogue 33, page 285

For 60 mm busbar systems **Note:** Technical information on conductor connections, see page 149.	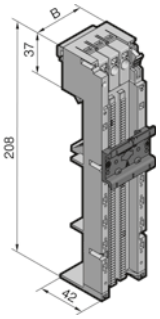	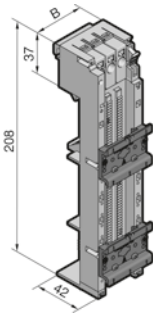	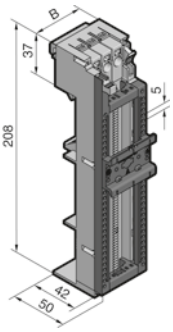		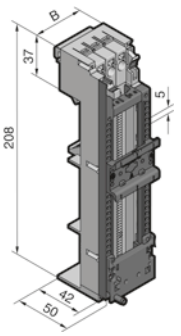	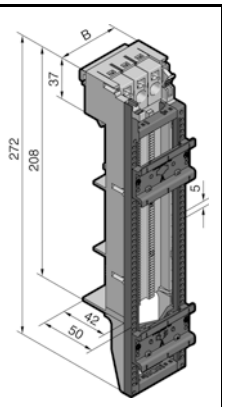
Width (B) mm	45	45	45	55	45	45
Rated current max.	32 A	32 A	32 A	32 A	32 A	32 A
Rated operating voltage	690 V AC	690 V AC	690 V AC	690 V AC	690 V AC	690 V AC
Connection of round conductors mm²	1.5 – 6	1.5 – 6	1.5 – 6	1.5 – 6	1.5 – 6	1.5 – 6
Support rails height mm	10	10	10	10	10	10
Model No. SV	**9340.510**	**9340.520**	**9340.530**	**9340.660**	**9340.550**	**9340.560**

OM Premium adaptors 25 A with tension spring clamp (3-pole)

Catalogue 33, page 285

For 60 mm busbar systems **Note:** Technical information on conductor connections, see page 149.	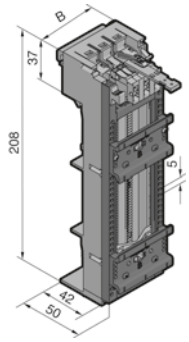		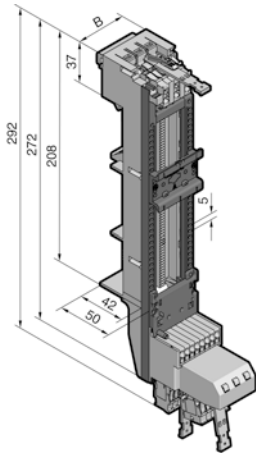
Width (B) mm	45	55	45
Rated current max.	25 A	25 A	25 A
Rated operating voltage	690 V AC	690 V AC	690 V AC
Connection of round conductors mm²	1.5 – 4	1.5 – 4	1.5 – 4
Support rails height mm	10	10	10
With connector outlet	[1]	[1]	[1] [2]
Model No. SV	**9340.910**	**9340.930**	**9340.900**

[1] Connector at the top with connection facility for 3 main contacts (1.5 – 4 mm²).
[2] Sub-unit with connection facilities for 3 main contacts (1.5 – 4 mm²) and 8 auxiliary contacts (0.5 – 2.5 mm²) including connectors.

OM adaptors 65 A with tension spring clamp (3-pole)

Catalogue 33, page 286

For 60 mm busbar systems **Note:** Technical information on conductor connections, see page 149.	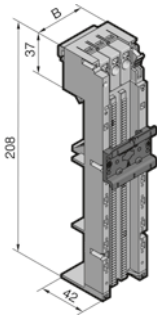	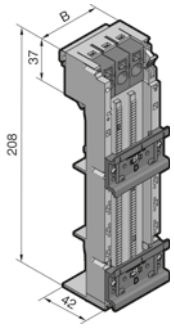	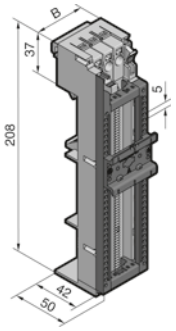	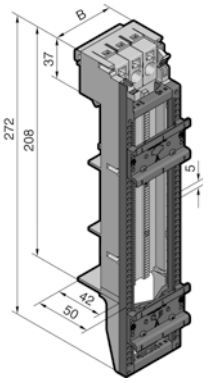
Width (B) mm	55	55	55	55
Rated current max.	65 A[1)]	65 A[1)]	65 A[1)]	65 A[1)]
Rated operating voltage	690 V AC	690 V AC	690 V AC	690 V AC
Connection of round conductors mm²	2.5 – 16	2.5 – 16	2.5 – 16	2.5 – 16
Support rails height mm	10	10	10	10
Model No. SV	**9340.610**	**9340.620**	**9340.630**	**9340.650**

[1)] According to a heat dissipation test to IEC 61 439-1, a current carrying capacity of up to 80 A is supported.

OM supports without contact system (3-pole)

Catalogue 33, page 286

For 60 mm busbar systems **Approvals:** c UL us LISTED E191125	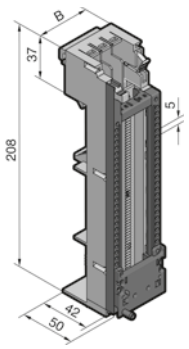	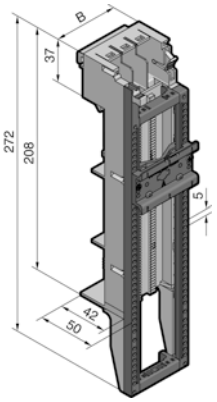	
Width (B) mm	45	45	55
Support rails height mm	–	10	10
Model No. SV	**9340.260** UL	**9340.250** UL	**9340.270** UL

RiLine60 component adaptors

Circuit-breaker component adaptors 100 A/125 A (3-pole)

Catalogue 33, page 287

For 60 mm busbar systems

Note:
– Mounting positions for universal component configuration, see page 190.
– Technical information on conductor connections, see page 149.

Approvals:

c UL us LISTED
E191125

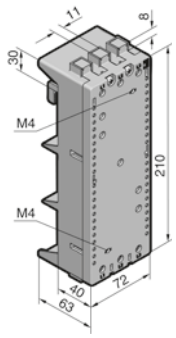

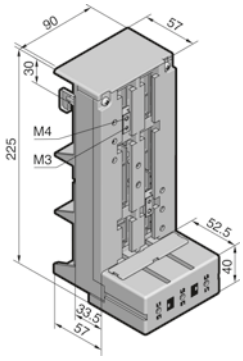

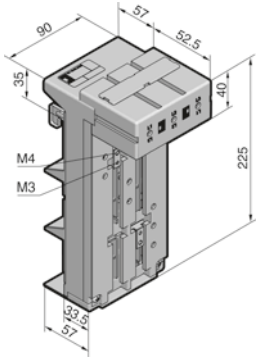

Rated current max.	IEC	100 A	100 A	125 A	125 A
	UL	100 A	100 A	125 A	125 A
Rated operating voltage	IEC	690 V AC	690 V AC	690 V AC	690 V AC
	UL	600 V AC	600 V AC	600 V AC	600 V AC
Cable outlet		Top	Bottom	Top	Bottom
Model No. SV		**9342.400** (UL)	**9342.410** (UL)	**9342.540** (UL)	**9342.550** (UL)
Assembly data for applications to IEC (EN)					
Tightening torque Nm – Rail attachment – Terminal screw – Switchgear attachment		2 3 1.5	2 3 1.5	6 12 1.5	6 12 1.5
Connection of round conductors mm²		10 – 35	10 – 35	35 – 120	35 – 120
Clamping area for laminated copper bars W x H mm		10 x 7.8	10 x 7.8	18.5 x 15.5	18.5 x 15.5
Assembly data for applications to UL					
Tightening torque Nm – Rail attachment – Terminal screw – Switchgear attachment		2 5 1.5	2 5 1.5	6 12 1.5	6 12 1.5
Connection of round conductors		AWG 2 – 6	AWG 2 – 6	AWG 2 – MCM 250	AWG 2 – MCM 250
Connection of laminated copper bars mm		–	–	10 x 15.5 x 0.8[1)]	10 x 15.5 x 0.8[1)]
Material specifications					
Contact track	E-Cu, nickel-plated	■	■	■	■
Conductor connection clamp	Sheet steel, zinc-plated	■	■	–	–
	Cast brass, nickel-plated	–	–	■	■

[1)] Number of membranes x membrane width x membrane thickness

Circuit-breaker component adaptors 160 A (3-pole)

Catalogue 33, page 287

For 60 mm busbar systems **Note:** – Mounting positions for universal component configuration, see page 190. – Technical information on conductor connections, see page 149.	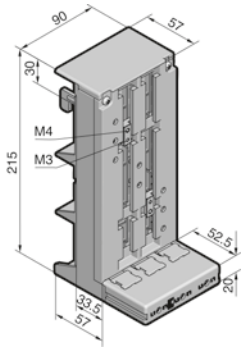	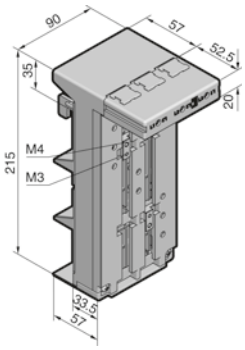
Rated current max.	160 A	160 A
Rated operating voltage	690 V AC	690 V AC
Cable outlet	Top	Bottom
Model No. SV	**9342.500**	**9342.510**
Assembly data for applications to IEC (EN)		
Tightening torque Nm – Rail attachment – Terminal screw – Switchgear attachment	 6 12 1.5	 6 12 1.5
Connection of round conductors mm²	35 – 120	35 – 120
Clamping area for laminated copper bars W x H mm	18.5 x 15.5	18.5 x 15.5
Material specifications		
Contact track: E-Cu, nickel-plated	■	■
Conductor connection clamp: Cast brass, nickel-plated	■	■

RiLine60 component adaptors

Circuit-breaker component adaptors 250 A/360 A (3-pole)

Catalogue 33, page 288

For 60 mm busbar systems **Note:** – Mounting positions for universal component configuration, see page 190. – Technical information on conductor connections, see page 149. **Approvals:** c UL us LISTED E191125		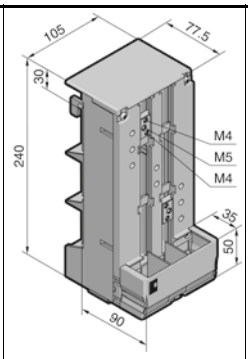	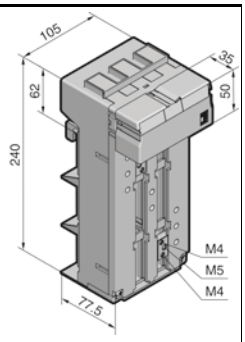	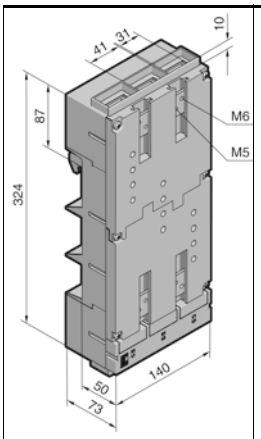	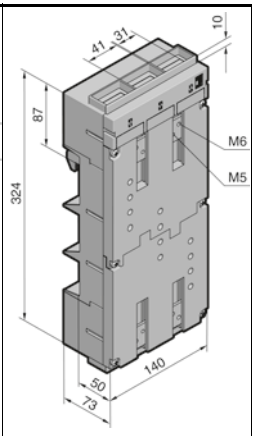
Rated current max.	IEC	250 A	250 A	630 A	630 A
	UL	250 A	250 A	600 A	600 A
Rated operating voltage	IEC	690 V AC	690 V AC	690 V AC	690 V AC
	UL	600 V AC	600 V AC	600 V AC	600 V AC
Cable outlet		Top	Bottom	Top	Bottom
Model No. SV		**9342.600** (UL)	**9342.610** (UL)	**9342.700** (UL)	**9342.710** (UL)
Assembly data for applications to IEC (EN)					
Tightening torque Nm – Rail attachment – Terminal screw – Switchgear attachment		6 12 1.5	6 12 1.5	14 32 2.5	14 32 2.5
Connection of round conductors mm²		35 – 120	35 – 120	max. 150 (with ring terminal M10)	max. 150 (with ring terminal M10)
Clamping area for laminated copper bars W x H mm		18.5 x 15.5	18.5 x 15.5	32 x 10	32 x 10
Assembly data for applications to UL					
Tightening torque Nm – Rail attachment – Terminal screw – Switchgear attachment		6 12 1.5	6 12 1.5	14 30 2.5	14 30 2.5
Connection of round conductors		AWG 2 – MCM 250	AWG 2 – MCM 250	–	–
Connection of laminated copper bars mm		10 x 15.5 x 0.8[1)]	10 x 15.5 x 0.8[1)]	10 x 32 x 1[1)]	10 x 32 x 1[1)]
Material specifications					
Contact track: E-Cu, nickel-plated		■	■	■	■
Conductor connection clamp: Cast brass, nickel-plated		■	■	–	–
Bolts M10		–	–	■	■

[1)] Number of membranes x membrane width x membrane thickness

Circuit-breaker component adaptors 160 A/250 A (4-pole)

Catalogue 33, page 289

For 60 mm busbar systems **Note:** Technical information on conductor connections, see page 149. **Approvals:** c UL us LISTED E191125		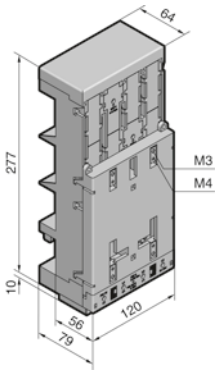	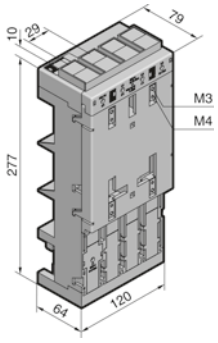	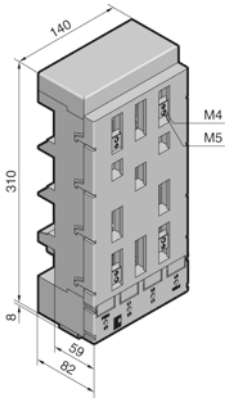	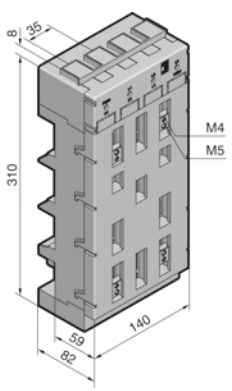
Rated current up to	IEC	160 A	160 A	250 A	250 A
	UL	125 A	125 A	250 A	250 A
Rated operating voltage	IEC	690 V AC	690 V AC	690 V AC	690 V AC
	UL	600 V AC	600 V AC	600 V AC	600 V AC
Cable outlet		Top	Bottom	Top	Bottom
Model No. SV		**9342.504** (UL)	**9342.514** (UL)	**9342.604** (UL)	**9342.614** (UL)
Assembly data for applications to IEC (EN)					
Tightening torque Nm – Rail attachment – Terminal screw – Switchgear attachment		6 12 1.5	6 12 1.5	6 12 1.5	6 12 1.5
Connection of round conductors mm²		35 – 120	35 – 120	35 – 120	35 – 120
Clamping area for laminated copper bars W x H mm		18.5 x 15.5	18.5 x 15.5	18.5 x 15.5	18.5 x 15.5
Assembly data for applications to UL					
Tightening torque Nm – Rail attachment – Terminal screw – Switchgear attachment		6 12 1.5	6 12 1.5	6 12 1.5	6 12 1.5
Connection of round conductors		AWG 2 – MCM 250	AWG 2 – MCM 250	AWG 2 – MCM 250	AWG 2 – MCM 250
Connection of laminated copper bars mm		10 x 15.5 x 0.8[1)]	10 x 15.5 x 0.8[1)]	10 x 15.5 x 0.8[1)]	10 x 15.5 x 0.8[1)]
Material specifications					
Contact track: E-Cu, nickel-plated		■	■	■	■
Conductor connection clamp: Cast brass, nickel-plated		■	■	■	■

[1)] Number of membranes x membrane width x membrane thickness

RiLine60 component adaptors

Circuit-breaker component adaptors

In addition to direct population of circuit-breaker component adaptors with the circuit-breakers specified in Catalogue 33 on page 287/288, the circuit-breaker component adaptors may also be individually populated with switchgear.

In this regard, care should be taken to ensure that

- the mounting points of the switchgear are within the setting range of the sliding blocks,
- the switchgear may be mounted on the adaptor with respect to the external dimensions and connection range.

The detailed drawings below should serve as templates for checking the required mounting position.

SV 9342.400/.410

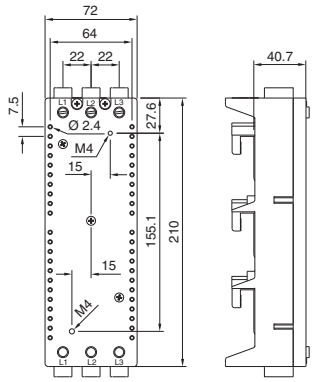

SV 9342.500/.510

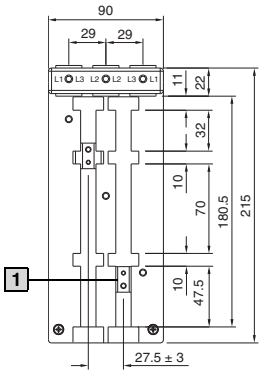

SV 9342.540/.550
Comparable with SV 9342.500/.510

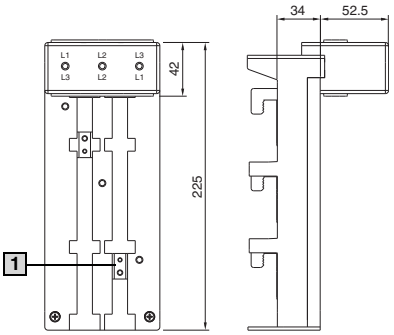

1 Sliding block
SV 9342.560

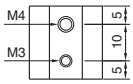

SV 9342.600/.610

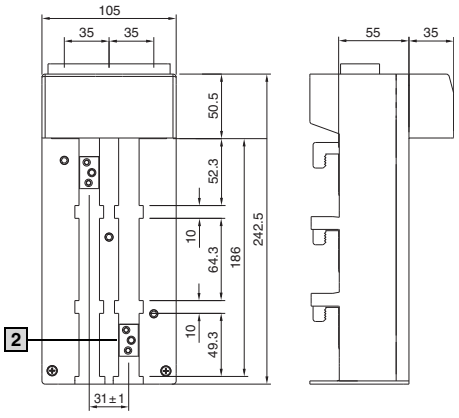

SV 9342.700/.710

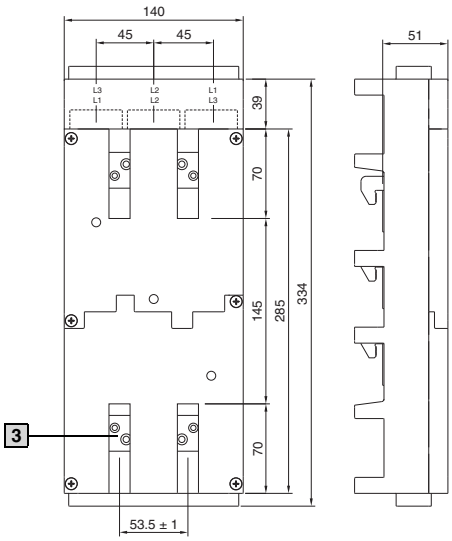

2 Sliding block
SV 9342.640

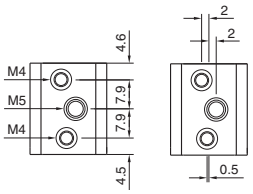

3 Sliding block

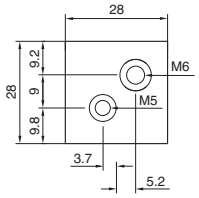

Bus-mounting fuse bases (3-pole)

Catalogue 33, page 294

For 60 mm busbar systems

Note:
– For the use of fuse inserts to EN 60 269-3 (VDE 0636-301).
– Load factor, see page 149.
– Current carrying capacity of connection cables, see page 150.
– Use of semi-conductor fuses, see page 156.

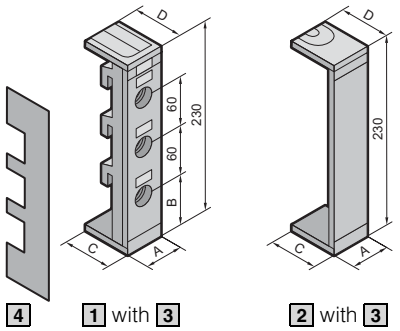

4 | 1 with 3 | 2 with 3

Design		Clamping screw fastening			Snap-on mounting		
Fuse inserts		D 02-E 18 (adaptor sleeve)	D II-E 27 (adaptor screw)	D III-E 33 (adaptor screw)	D 02-E 18 (adaptor sleeve)	D II-E 27 (gauge ring)	D III-E 33 (gauge ring)
Rated current		63 A	25 A	63 A	63 A	25 A	63 A
Rated operating voltage		400 V AC	500 V AC	690 V AC	400 V AC	500 V AC	690 V AC
Model No. SV For bar thickness	5 mm	**3418.000**	**3427.000**	**3433.000**	**3422.000**	**3520.000**	**3530.000**
	10 mm				**3423.000**	**3521.000**	**3531.000**
Assembly data for applications to IEC (EN)							
Tightening torque Nm – Rail attachment – Terminal screw		 2 2.5	 2 2.5	 2 2.5	 – 2.5	 – 2.5	 – 2.5
Connection of round conductors[1] mm²		1.5 – 16	1.5 – 16	1.5 – 16	1.5 – 16	1.5 – 16	1.5 – 16
Contact hazard protection							
Design		**Model No. SV**			**Model No. SV**		
1 Contact hazard protection cover		3419.000	3428.000	3434.000	3424.000	3428.000	3434.000
2 Extension cover		3421.000	3430.000	3436.000	–	3430.000	3436.000
3 End caps for bar system with base tray		3420.010	3429.010	3435.010	3425.010	3429.010	3435.010
3 End caps for bar system without base tray		3420.000	3429.000	3435.000	3425.000	3429.000	3435.000
4 Side cover		3093.000	3093.000	3093.000	3093.000	3093.000	3093.000
Width (A) mm		27	42	57	36	42	57
Spacing (B) mm		57	40	40	57	40	40
Depth (C) mm[2]		67	71.5	71.5	67	71.5	71.5
Depth (D) mm[3] for bar system	with base tray	47	51.5	51.5	47	51.5	51.5
	without base tray	67	71.5	71.5	67	71.5	71.5

[1] Wire end ferrules should be used with fine and extra-fine wire conductors.
[2] Bottom end cap
[3] Top end cap

RiLine60 fuse elements

Bus-mounting fuse base D-Switch (3-pole, switchable)

Catalogue 33, page 295

For 60 mm busbar systems **Note:** – For the use of fuse inserts to EN 60 269-3 (VDE 0636-301). – When using 10 x 38 mm fuses, reducing retaining springs must be used. – Load factor, see page 149. – Current carrying capacity of connection cables, see page 150. – Use of semi-conductor fuses, see page 156.	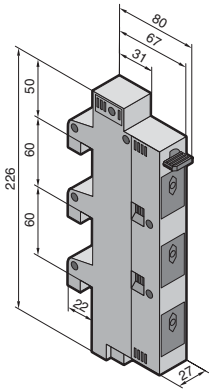

Design	Snap-on mounting
Fuse insert	D 01 (with retaining spring)[1] D 02 (with Neozed adaptor sleeve) 10 x 38 mm (with retaining spring)
Rated operating current	63 A
Rated operating voltage	400 V AC
Service short-circuit breaking capacity	50 kA
Level of contamination	3
Overvoltage category	IV
Min. voltage, indicator light	100 – 400 V AC
Switching category	AC-22B
Contact hazard protection	IP 20
Fuse monitoring display	LED “off” = operational LED “flashing” = error message
Model No. SV	**9340.950**

Assembly data for applications to IEC (EN)

Tightening torque Nm Terminal screw		4
Conductor connection[2] Cu mm²	f with wire end ferrule	1.5 – 25
	re/rm	1.5 – 25

[1] Use of D 01 fuses optionally possible with adaptor sleeve for D 02 base/plinths.
[2] Additional, integral cable routing for conductors up to 6 mm².

NH fuse-switch disconnectors, size 000 (3-pole)

Catalogue 33, page 296

Design		NH fuse-switch disconnectors for mounting plate assembly	Busbar adaptor for SV 3431.000	
Note: – For the use of fuse inserts to EN 60 269-2. – Technical specifications to IEC/EN 60 947-3, see page 199. – Load factor, see page 149. – Current carrying capacity of connection cables, see page 150. – Use of semi-conductor fuses, see page 156.		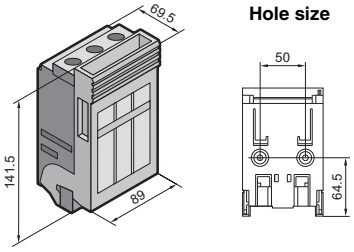	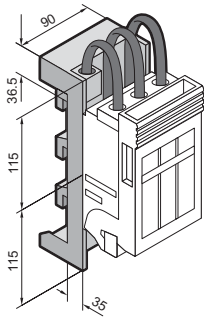	
Rated operating current		100 A	–	–
Rated operating voltage		690 V AC	–	–
With connection cables mm²		–	35	35
For bar systems mm		–	60	60
For bar thickness mm		–	5	10
Model No. SV		**3431.000**	**9320.040**	**9320.050**
Assembly data for applications to IEC (EN)				
Tightening torque Nm – Terminal screw		3	–	–
Type of connection		Box terminal	–	–
Conductor connection Cu mm²	f with wire end ferrule	1.5 – 50	–	–
	re/rm	1.5 – 50	–	–
Clamping area for laminated copper bars W x H mm		10 x 10	–	–
Minimum distance to conductive earthed parts mm	Side	30	–	–
	Top	80	–	–
	Rear	0	–	–
Material specifications				
Contact track	E-Cu, silver-plated	■	–	–
	E-Cu, nickel-plated	–	■	■

RiLine NH fuse elements

NH bus-mounting fuse-switch disconnectors, size 000 (3-pole)

Catalogue 33, page 297

For 60 mm busbar systems

Note:
- For the use of fuse inserts to EN 60 269-2.
- Technical specifications to IEC/EN 60 947-3, see page 199.
- Load factor, see page 149.
- Current carrying capacity of connection cables, see page 150.
- Use of semi-conductor fuses, see page 156.

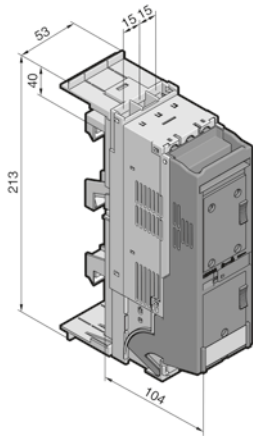

Rated operating current		100 A	
Rated operating voltage		690 V AC	
Cable outlet		Top	Bottom
Model No. SV		**3431.020**	**3431.030**
Assembly data for applications to IEC (EN)			
Tightening torque Nm – Rail attachment – Terminal screw		 4.5 4.5	 4.5 4.5
Type of connection		Box terminal	Box terminal
Conductor connection Cu mm²	f with wire end ferrule	2.5 – 50	2.5 – 50
	re/rm	2.5 – 50	2.5 – 50
Material specifications			
Contact track: E-Cu, silver-plated		■	■

NH fuse-switch disconnectors, size 00 (3-pole)

Catalogue 33, page 298/299

Design		NH fuse-switch disconnectors for mounting plate assembly		NH bus-mounting fuse-switch disconnectors for 60 mm busbar systems	
Cable outlet top/bottom. **Note:** – For the use of fuse inserts to EN 60 269-2. – Technical specifications to IEC/EN 60 947-3, see page 199/200. – Load factor, see page 149. – Current carrying capacity of connection cables, see page 150. – Use of semi-conductor fuses, see page 156/157. **Approvals:** SV 9344.000/.010 SV 9343.000/.010 E235931 Applications to RU only in conjunction with "Special Purpose Fuses".		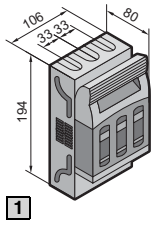 1 **Hole size** 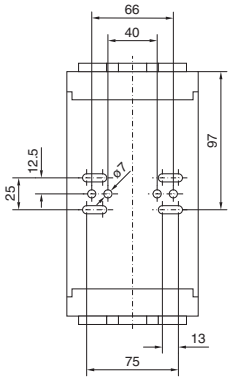 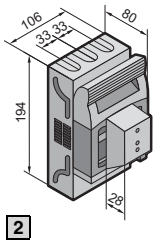 2 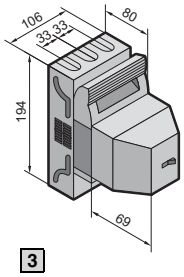 3		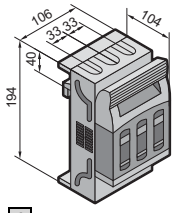 1 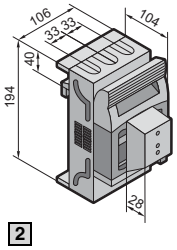 2 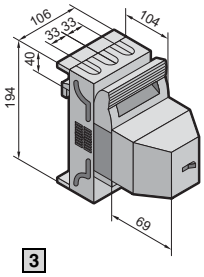 3	
Rated operating current	IEC	160 A		160 A	
	UL	160 A		160 A	
Rated operating voltage	IEC	690 V AC/400 – 690 V AC[1]		690 V AC/400 – 690 V AC[1]	
	UL	600 V~		600 V~	
1 **Model No. SV**		**9344.000**	**9344.010**	**9343.000**	**9343.010**
2 With electronic fuse monitoring		**9344.020**	**9344.030**	**9343.020**	**9343.030**
3 With electromechanical fuse monitoring		**9344.040**	**9344.050**	**9343.040**	**9343.050**
Assembly data for applications to IEC (EN)/UL					
Tightening torque Nm – Rail attachment – Terminal screw		– 4.5	– 12	6 4.5	6 12
Type of connection		Box terminal	Screw M8	Box terminal	Screw M8
Conductor connection Cu/Al mm²	re/rm	4 – 95	–	4 – 95	–
	se/sm	–	–	–	–
Conductor connection with ring terminal mm²		–	up to 95	–	up to 95
Clamping area for laminated copper bars W x H mm		13 x 13	20 x 5	13 x 13	20 x 5
Minimum distance to conductive earthed parts mm	Side	40	40	40	40
	Top	100	100	100	100
	Rear	0	0	0	0
Material specifications					
Contact track: E-Cu, silver-plated		■	■	■	■
Terminal: Cast brass, nickel-plated		■	–	■	–

[1] Rated operating voltage 400 – 690 V~ for NH disconnectors with electronic fuse monitoring.

RiLine NH fuse elements

NH fuse-switch disconnectors size 1 (3-pole)

Catalogue 33, page 300/301

Design		NH fuse-switch disconnectors for mounting plate assembly		NH bus-mounting fuse-switch disconnectors for 60 mm busbar systems	
Cable outlet top/bottom. **Note:** – For the use of fuse inserts to EN 60 269-2. – Technical specifications to IEC/EN 60 947-3, see page 199/200. – Load factor, see page 149. – Current carrying capacity of connection cables, see page 150. – Use of semi-conductor fuses, see page 156/157. **Approvals:** SV 9344.100/.110 SV 9343.100/.110 E235931 Applications to RU only in conjunction with "Special Purpose Fuses".		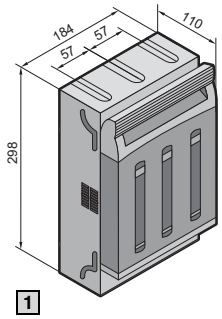 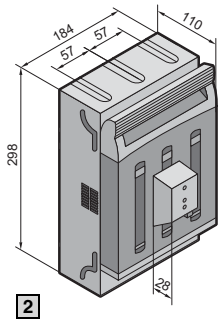 **Hole size** 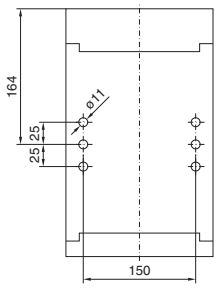 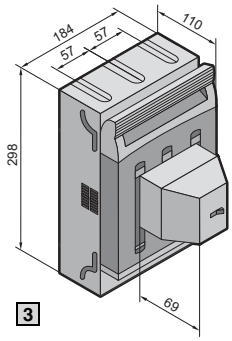		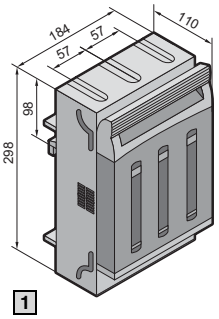 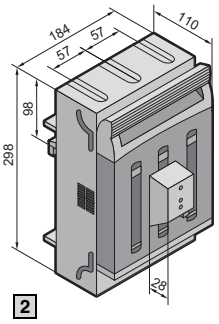 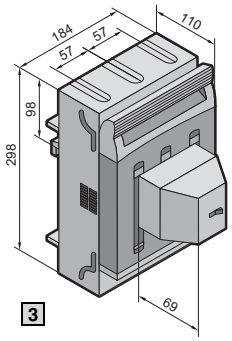	
Rated operating current	IEC	250 A		250 A	
	UL	250 A		250 A	
Rated operating voltage	IEC	690 V AC/400 – 690 V AC[1]		690 V AC/400 – 690 V AC[1]	
	UL	600 V~		600 V~	
1 **Model No. SV**		**9344.100**	**9344.110**	**9343.100**	**9343.110**
2 With electronic fuse monitoring		**–**	**9344.130**	**9343.120**	**9343.130**
3 With electromechanical fuse monitoring		**–**	**9344.150**	**9343.140**	**9343.150**
Assembly data for applications to IEC (EN)/UL					
Tightening torque Nm – Rail attachment – Terminal screw		– 12	– 20	6 12	6 20
Type of connection		Box terminal	Screw M10	Box terminal	Screw M10
Conductor connection Cu/Al mm²	re/rm	35 – 150	–	35 – 150	–
	se/sm	50 – 150	–	50 – 150	–
Conductor connection with ring terminal mm²		–	up to 150	–	up to 150
Clamping area for laminated copper bars W x H mm		20 x 3 – 14	32 x 10	20 x 3 – 14	32 x 10
Minimum distance to conductive earthed parts mm	Side	40	40	40	40
	Top	100	100	100	100
	Rear	0	0	0	0
Material specifications					
Contact track: E-Cu, silver-plated		■	■	■	■
Terminal: Cast brass, nickel-plated		■	–	■	–

[1] Rated operating voltage 400 – 690 V~ for NH disconnectors with electronic fuse monitoring.

NH fuse-switch disconnectors size 2 (3-pole)

Catalogue 33, page 302/303

Design	NH fuse-switch disconnectors for mounting plate assembly	NH bus-mounting fuse-switch disconnectors for 60 mm busbar systems

Cable outlet top/bottom.

Note:
- For the use of fuse inserts to EN 60 269-2.
- Technical specifications to IEC/EN 60 947-3, see page 199/200.
- Load factor, see page 149.
- Current carrying capacity of connection cables, see page 150.
- Use of semi-conductor fuses, see page 156/157.

Approvals:

SV 9344.200/.210
SV 9343.200/.210

E235931

Applications to RU only in conjunction with "Special Purpose Fuses".

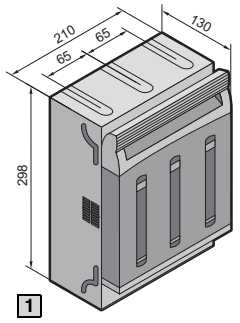

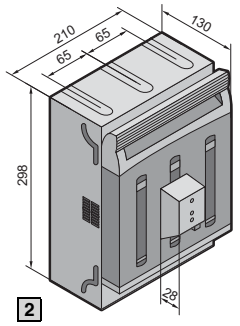

Hole size

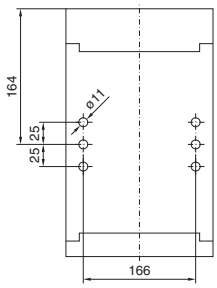

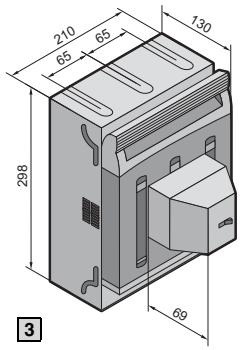

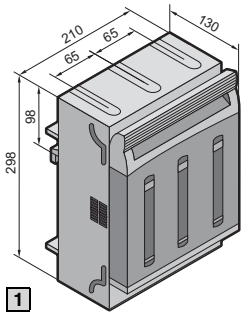

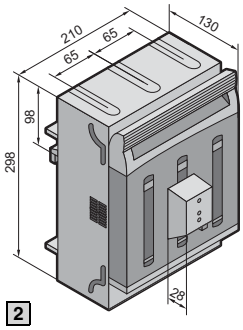

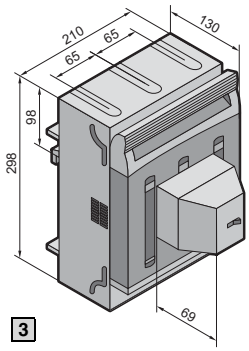

Rated operating current	IEC	400 A		400 A	
	UL	400 A		400 A	
Rated operating voltage	IEC	690 V AC/400 – 690 V AC[1]		690 V AC/400 – 690 V AC[1]	
	UL	600 V~		600 V~	
1 **Model No. SV**		**9344.200**	**9344.210**	**9343.200**	**9343.210**
2 With electronic fuse monitoring		**–**	**9344.230**	**9343.220**	**9343.230**
3 With electromechanical fuse monitoring		**–**	**9344.250**	**9343.240**	**9343.250**
Assembly data for applications to IEC (EN)/UL					
Tightening torque Nm – Rail attachment – Terminal screw		– 20	– 20	8 20	8 20
Type of connection		Box terminal	Screw M10	Box terminal	Screw M10
Conductor connection Cu/Al mm²	re/rm	95 – 300	–	95 – 300	–
	se/sm	120 – 300	–	120 – 300	–
Conductor connection with ring terminal mm²		–	up to 240	–	up to 240
Clamping area for laminated copper bars W x H mm		32 x 10 – 20	50 x 10	32 x 10 – 20	50 x 10
Minimum distance to conductive earthed parts mm	Side	50	50	50	50
	Top	120	120	120	120
	Rear	0	0	0	0
Material specifications					
Contact track: E-Cu, silver-plated		■	■	■	■
Terminal: Cast brass, nickel-plated		■	–	■	–

[1] Rated operating voltage 400 – 690 V~ for NH disconnectors with electronic fuse monitoring.

RiLine NH fuse elements

NH fuse-switch disconnectors size 3 (3-pole)

Catalogue 33, page 304/305

Design	NH fuse-switch disconnectors for mounting plate assembly		NH bus-mounting fuse-switch disconnectors for 60 mm busbar systems	
Cable outlet top/bottom. **Note:** – For the use of fuse inserts to EN 60 269-2. – Technical specifications to IEC/EN 60 947-3, see page 199/200. – Load factor, see page 149. – Current carrying capacity of connection cables, see page 150. – Use of semi-conductor fuses, see page 156/157. **Approvals:** SV 9344.300/.310 SV 9343.300/.310 E235931 Applications to RU only in conjunction with "Special Purpose Fuses".	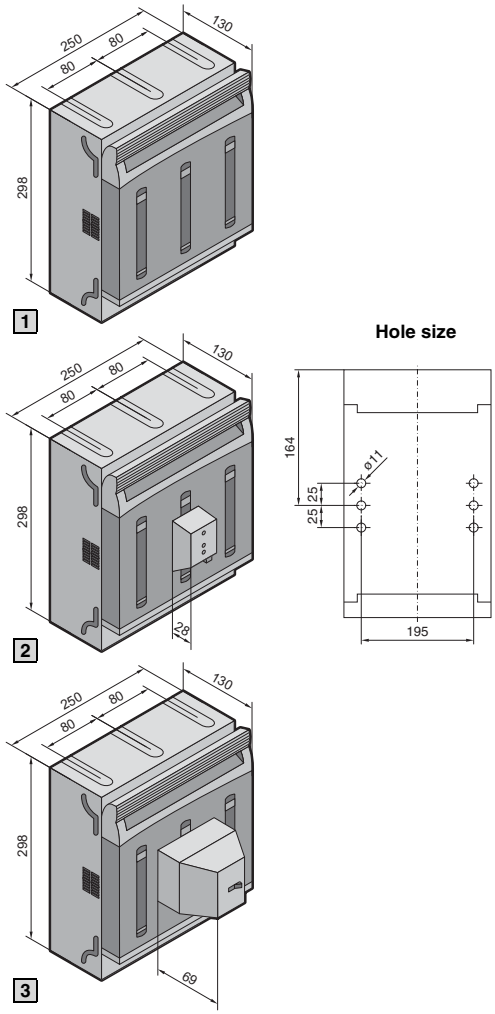		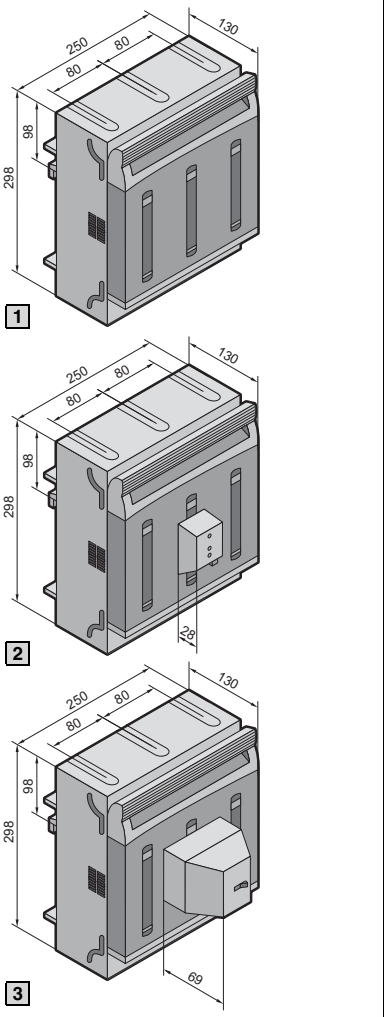	
Rated operating current IEC	630 A		630 A	
Rated operating current UL	630 A		630 A	
Rated operating voltage IEC	690 V AC/400 – 690 V AC[1]		690 V AC/400 – 690 V AC[1]	
Rated operating voltage UL	600 V~		600 V~	
1 **Model No. SV**	**9344.300**	**9344.310**	**9343.300**	**9343.310**
2 With electronic fuse monitoring	**–**	**9344.330**	**9343.320**	**9343.330**
3 With electromechanical fuse monitoring	**–**	**9344.350**	**9343.340**	**9343.350**
Assembly data for applications to IEC (EN)/UL				
Tightening torque Nm – Rail attachment	–	–	8	8
– Terminal screw	20	20	20	20
Type of connection	Box terminal	Screw M10	Box terminal	Screw M10
Conductor connection Cu/Al mm² re/rm	95 – 300	–	95 – 300	–
Conductor connection Cu/Al mm² se/sm	120 – 300	–	120 – 300	–
Conductor connection with ring terminal mm²	–	up to 300	–	up to 300
Clamping area for laminated copper bars W x H mm	32 x 10 – 20	50 x 10	32 x 10 – 20	50 x 10
Minimum distance to conductive earthed parts mm Side	60	60	60	60
Minimum distance to conductive earthed parts mm Top	140	140	140	140
Minimum distance to conductive earthed parts mm Rear	0	0	0	0
Material specifications				
Contact track: E-Cu, silver-plated	■	■	■	■
Terminal: Cast brass, nickel-plated	■	–	■	–

[1] Rated operating voltage 400 – 690 V~ for NH disconnectors with electronic fuse monitoring.

NH disconnectors, size 000 – 3

Catalogue 33, page 296 – 305

Technical specifications IEC/EN 60 947-3						
Size (NH fuse inserts to IEC/EN 60 269-1)		Size 000	Size 00	Size 1	Size 2	Size 3
Rated operating current I_e		100 A	160 A	250 A	400 A	630 A
Rated operating voltage U_e		690 V AC	690 V AC[1)]	690 V AC[1)]	690 V AC[1)]	690 V AC[1)]
Rated insulation voltage U_i		690 V AC	1000 V	1000 V	1000 V	1000 V
Rated surge voltage resistance U_{imp}		6 kV	8 kV[1)]	8 kV[1)]	8 kV[1)]	8 kV[1)]
Level of contamination		3	3	3	3	3
Overvoltage category		III	III	III	III	III
Rated frequency		50/60 Hz	50/60 Hz	50/60 Hz	50/60 Hz	50/60 Hz
Conditional rated short-circuit current (when protected with fuses)	at 690 V AC	80 kA	80 kA	80 kA	50 kA	80 kA
	at 500 V AC	80 kA	80 kA	80 kA	80 kA	80 kA
Utilisation category	400 V AC	AC-22B (I_e = 100 A)	AC-23B	AC-23B	AC-23B	AC-23B
	500 V AC	AC-22B (I_e = 100 A)	AC-22B	AC-23B	AC-22B (AC-23B[2)])	AC-22B (AC-23B[2)])
	690 V AC	AC-21B (I_e = 100 A)	AC-21B	AC-22B (AC-23B[2)])	AC-21B (AC-23B[2)])	AC-21B (AC-23B[2)])
	220 V DC[3)]	–	DC-22B	DC-21B (DC-22B[2)])	DC-21B (DC-22B[2)])	DC-21B (DC-22B[2)])
	440 V DC[3)]	DC-21B (I_e = 100 A)	–	DC-22B[2)]	DC-22B[2)]	DC-22B[2)]
	1000 V DC[3)4)]	–	DC-20B	DC-20B	DC-20B	DC-20B
Mechanical life (switching cycles)		2000	1400	1400	800	800
Electrical life (switching cycles)		200	200	200	200	200
Siting conditions		Interior siting: Relative humidity 50% at 40°C or 90% at 20°C (without condensation due to temperature fluctuations)				
Permissible ambient temperature		–25°C to +55°C	–20°C to +55°C			
$P_{v\ max.}$/fuse insert		7.5 W	12 W	23 W	34 W	48 W

[1)] Reduction of the rated values for electronic fuse monitoring: Rated surge voltage resistance 3.5 kV, rated voltage 400 – 690 V AC.
Reduction of rated values for electromechanical fuse monitoring: Rated surge voltage resistance 6 kV.
[2)] With arc chamber set (Model No. SV 9344.680) for increased switching capacity.
[3)] DC application with component mounting of phase L_1 and L_3 in series, electronic fuse monitoring function not supported.
[4)] For use as disconnector or fuse-switch disconnector.
The required creepage distances and clearances should be observed in the cable connection area.

NH disconnectors, size 00 – 3

Conductor connection of several ring terminals

Catalogue 33, page 298 – 305

Size	Size 00	Size 1	Size 2	Size 3
Conductor cross-section (mm²)	Number of ring terminals to DIN 46 235			
16	2	2	–	–
25	2	2	–	–
35	2	2	–	–
50	2	2	–	–
70	–	2	–	–
95	–	2	–	–
120	–	2	–	–
150	–	2	2	2
185	–	2	2	2
240	–	–	2	2
300	–	–	2	2

Note:
The creepage distances and clearances to EN 60 664-1 should be checked and insulating plates be installed if necessary.
Fine-wire with wire end ferrule.

RiLine NH fuse elements

NH disconnectors, size 00 – 3

Electronic and electromechanical fuse monitoring
Catalogue 33, page 299 – 305

Technical specifications	Electronic fuse monitoring	Electromechanical fuse monitoring
Rated operating voltage U_e	400 V AC to 690 V AC	24 V AC to 690 V AC 24 V AC to 250 V DC
Tolerance	±10% (400/500 V AC) +5%/–10% (690 V AC)	±10%
Rated insulation voltage U_i	1000 V AC	690 V AC
Rated surge voltage resistance U_{imp}	8 kV	6 kV
Rated frequency	50 – 60 Hz	50 – 60 Hz
Response time	Max. 1.5 s	Max. 0,5 s
Auxiliary contacts	1 NO, 1 NC 250 V AC, 30 V DC, 5 A	1 NO, 1 NC 24 V AC, 2 A/ 230 V AC, 0.5 A/ 24 V DC, 1 A/ 60 V DC, 0.15 A
Load capacity of auxiliary contacts	5 A	4 A
Permissible ambient temperature	–20°C to +55°C (400/500 V AC), –20°C to +45°C (690 V AC)	–20°C to +55°C
Display	LED flashing green (operational) 13/14: Open 21/22: Closed	Rocker switch position “1” (operational) 13/14: Closed 21/22: Open
	LED flashing red (error message) 13/14: Closed 21/22: Open	Rocker switch position “0” (error message) 13/14: Open 21/22: Closed
Connection of auxiliary contacts	Terminal up to 1.5 mm²	Terminal up to 1.5 mm²
NH fuse inserts to IEC/EN 60 269-3	With contacted, live puller lugs	
Material	Insulation-displacement contacts: E-Cu, tin-plated	
Function	Differential voltage	

Wiring diagram

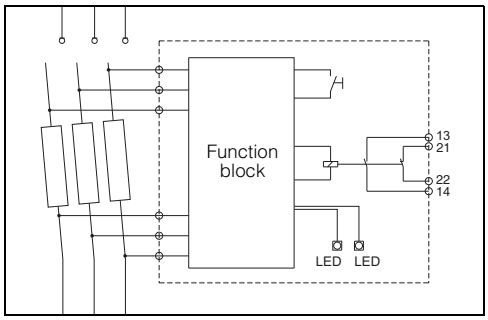

Electronic fuse monitoring

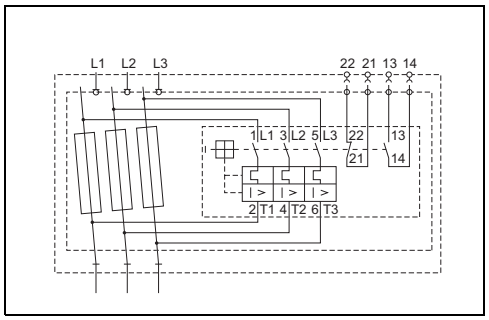

Electromechanical fuse monitoring

NH fused isolators

Size 00 (3-pole) Catalogue 33, page 306

Size 1/size 2/size 3 (3-pole) Catalogue 33, page 307

Note:
- For the use of fuse inserts to EN 60 269-2.
- Technical specifications to IEC/EN 60 947-3, see page 202.
- Load factor, see page 149.
- Current carrying capacity of connection cables, see page 150.
- Use of semi-conductor fuses, see page 156.

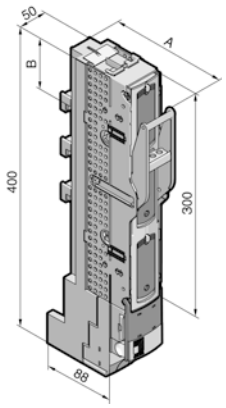

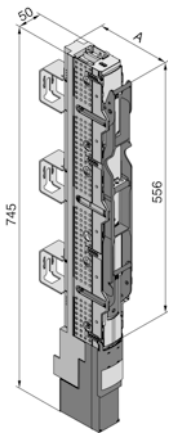

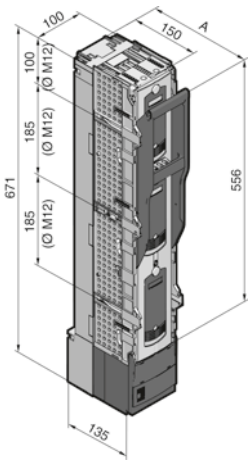

Size		Size 00					Size 00		Size 1	Size 2	Size 3
Rated operating current		160 A					160 A		250 A	400 A	630 A
Rated operating voltage		690 V AC					690 V AC		690 V AC	690 V AC	690 V AC
For bar centre distance mm		60	100	60	100	100	185	185	185	185	185
Cover position (A) mm	Closed	123					180		199	199	199
	Off-load position	183					239		260	260	260
Contact point (L1) B mm		84	30	84	30	30	–	–	–	–	–
For converter installation		–	–	–	–	■	–	■	■	■	■
Model No. SV		**9346.000**	**9346.020[1)]**	**9346.010**	**9346.030[1)]**	**9346.060**	**9346.040**	**9346.050**	**9346.110**	**9346.210**	**9346.310**
Assembly data for applications to IEC (EN)											
Tightening torque Nm – Rail attachment – Terminal screw		6 4.5		6 14			12 14	12 14	40 32	40 32	40 32
Type of connection		Box terminal		Screw M8			Screw M8	Screw M8	Bolts M12	Bolts M12	Bolts M12
Conductor connection re/rm Cu mm^2		2.5 – 95		–			–	–	–	–	–
Conductor connection with ring terminal mm^2		–		up to 95			up to 95	up to 95	up to 240	up to 240	up to 240
Minimum distance to conductive earthed parts mm	Side	50		50			50	50	10	10	10
	Top	100		100			100	100	50	50	50
	Rear	0		0			0	0	0	0	0
Material specifications											
Contact track: E-Cu, silver-plated		■		■			■	■	■	■	■
Terminal: Sheet steel, zinc-plated		■		–			–	–	–	–	–

[1)] When using busbar adaptor SV 9346.410/SV 9346.420 – see Catalogue 33, page 325 – also suitable for mounting on 185 mm busbar systems.

RiLine NH fuse elements

NH fused isolators, size 00 – 3

Catalogue 33, page 306/307

Technical specifications to IEC/EN 60 947-3					
Size (NH fuse inserts to IEC/EN 60 269-2)		00	1	2	3
Rated operating current I_e		160 A	250 A	400 A	630 A
Rated operating voltage U_e		690 V AC	690 V AC	690 V AC	690 V AC
Rated insulation voltage U_i		1000 V	1000 V	1000 V	1000 V
Rated surge voltage resistance U_{imp}		8 kV	8 kV	8 kV	8 kV
Level of contamination		3	3	3	3
Overvoltage category		III	III	III	III
Rated frequency		50/60 Hz	50/60 Hz	50/60 Hz	50/60 Hz
Conditional rated short-circuit current (when protected with fuse inserts)	at 500 V AC	100 kA	120 kA	120 kA	120 kA
	at 690 V AC	100 kA	100 kA (with 200 A)	100 kA (with 315 A)	100 kA (with 500 A)
Utilisation category	400 V AC	AC-23B with 160 A	AC-23B with 250 A	AC-23B with 400 A	AC-23B with 630 A
	500 V AC	AC-22B with 160 A	AC-22B with 250 A	AC-22B with 400 A	AC-22B with 630 A
	690 V AC	AC-22B with 160 A	AC-21B with 250 A	AC-21B with 400 A	AC-21B with 630 A
	1000 V DC[1)2)]	DC -20B	DC -20B	DC -20B	DC -20B
Rated short-time current resistance I_{cw}		5 kA	10 kA	15 kA	20 kA
Mechanical life (switching cycles)		1400	1400	800	800
Contact hazard protection – operating area		IP 3X	IP 2X	IP 2X	IP 2X
Siting conditions		Interior siting: Relative humidity 50% at 40°C or 90% at 20°C (without condensation due to temperature fluctuations)			
Permissible ambient temperature		–20°C to +60°C			
$P_{v\,max.}$/fuse insert		12 W	23 W	34 W	48 W

[1)] DC applications with component mounting of phase L1 and L3 in series.
[2)] For use as disconnector or fuse-switch disconnector. The required creepage distances and clearances should be observed in the cable connection area.

Notes:
– Vertical installation is the typical position of use.
– When using semi-conductor fuses, reduction factors should be taken into account.

NH slimline fuse-switch disconnectors, size 00 – 3

Conductor connection of several ring terminals

Catalogue 33, page 306/307

Size	Size 00	Size 1	Size 2	Size 3
Conductor cross-section (mm^2)	Number of ring terminals to DIN 46 235			
16	2	–	–	–
25	2	–	–	–
35	2	–	–	–
50	–	–	–	–
70	–	–	–	–
95	–	–	–	–
120	–	2	2	2
150	–	2	2	2
185	–	2	2	2
240	–	2	2	2
300	–	–	–	–

Note:
The creepage distances and clearances to EN 60 664-1 should be checked and, where necessary, insulating plates be installed.
Fine-wire with wire end ferrule.

Fuse holder up to 60 A (3-pole)

Catalogue 33, page 308

Design	Fuse holder for top-hat rail mounting to DIN EN 60 715		
For use of fuses – SV 9345.000: Class CC (UL 4248-4) – SV 9345.010/.030: Class J (UL 4248-8) **Note:** **SV 9345.010** May also be used for cylindrical fuses 22 x 58 mm to French standards without UL licensing. **Approvals:** c UL us LISTED E235931 **Standards:** UL 512, C 22.2 No. 39	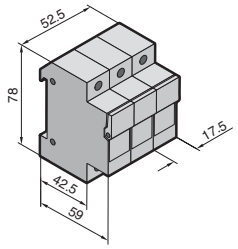	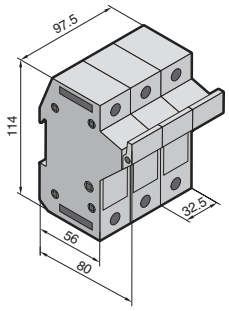	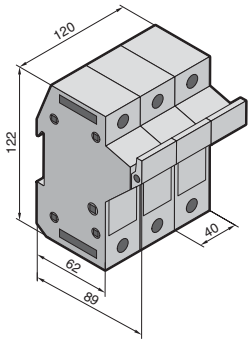
Fuse type (class)	CC	J	J
Rated operating current	30 A	30 A	60 A
Rated operating voltage	600 V AC	600 V AC	600 V AC
Fuse size mm	10 x 38	21 x 57	27 x 60
Switching capacity RMS Sym. Rating	200 kA	200 kA	200 kA
Min. voltage, indicator light	115 V≃	115 V≃	115 V≃
Contact hazard protection	IP 20[1)]	IP 20[1)]	IP 20[1)]
Model No. SV	**9345.000** Ⓤ	**9345.010** Ⓤ	**9345.030** Ⓤ
Assembly data for applications to UL			
Tightening torque – Terminal screw	2 Nm 14.75 in-lbs solid/stranded Cu	4 Nm 35 in-lbs solid/stranded Cu	5 Nm 45 in-lbs solid/stranded Cu
Conductor connection	AWG 6 – 14	AWG 2 – 14	AWG 2 – 14

[1)] In the operating area.

RiLine Class fuse elements

Fuse holder 61 – 400 A (3-pole)

Catalogue 33, page 309

Design	Fuse holder for mounting plate assembly	Fuse holder for 60 mm busbar systems
For use of J-Class fuses to UL 4248-8. **Approvals:** E235931 **Standards:** UL 4248-1/UL 4248-8 CSA C22.2 No. 4248.107 CSA C22.2 No. 4248.8-07	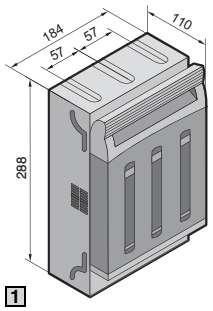 1 **Hole size** 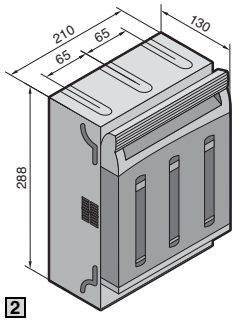 2 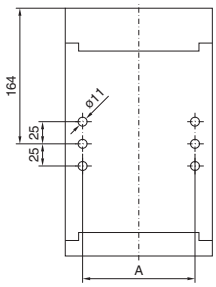 Model No. SV / A 1 SV 9345.110 / 150 2 SV 9345.210 / 166 3 SV 9345.410 / 195 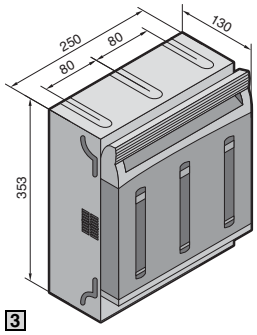 3	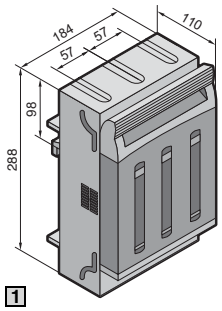 1 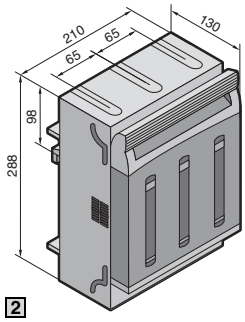 2 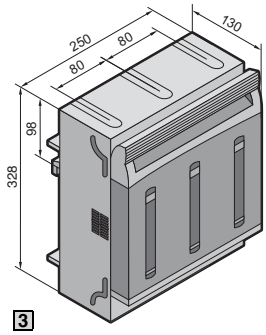 3

Design	1	2	3	1	2	3
Rated operating current	61 – 100 A	101 – 200 A	201 – 400 A	61 – 100 A	101 – 200 A	201 – 400 A
Rated operating voltage	600 V AC	600 V AC	600 V AC	600 V AC	600 V AC	600 V AC
Fuse size mm	29 x 118	41 x 146	54 x 181	29 x 118	41 x 146	54 x 181
Contact hazard protection	IP 10	IP 10	IP 10	IP 10	IP 10	IP 10
Model No. SV	**9345.110**	**9345.210**	**9345.410**	**9345.100**	**9345.200**	**9345.400**
Assembly data for applications to UL						
Tightening torque Nm – Rail attachment – Terminal screw	 – 12	 – 20	 – 20	 6 12	 8 20	 8 20
Type of connection	Box terminal	Box terminal	Box terminal	Box terminal	Box terminal	Box terminal
Conductor connection	AWG 2 – MCM 300	AWG 4/0 – MCM 600	AWG 4/0 – MCM 600	AWG 2 – MCM 300	AWG 4/0 – MCM 600	AWG 4/0 – MCM 600
Material specifications						
Contact track: E-Cu, silver-plated	■	■	■	■	■	■
Terminal: Cast brass, nickel-plated	■	■	■	■	■	■

Busbar supports 1- and 2-pole

Catalogue 33, page 310

Note: **SV 9340.030/SV 9342.030** The busbar supports may be bayed with 60 mm bar centre distance for the configuration of multi-pole systems. **Approvals:** c UL us LISTED E191125	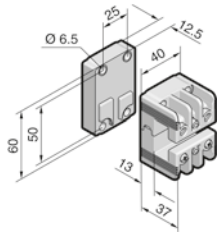	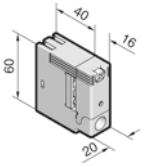	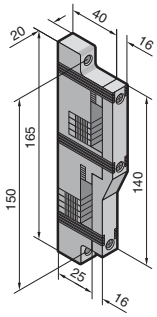
Number of poles	1-pole	1-pole	2-pole
Bar centre distance mm	–	–	60
For busbars E-Cu	PLS 1600	–	–
	–	12 x 5/10[1], 15 x 5 – 30 x 10 mm	12 x 5 – 30 x 10 mm
PEN/N/PE support	■	■	■
N/PE support	–	–	■
Model No. SV	**9342.030**	**9340.030** Ⓤ	**9340.040** Ⓤ
Assembly data for applications to IEC (EN)			
Tightening torque – Assembly screw – Lid attachment	M6 x 20/35 mm[2] 5 0.7	M5 x 25 5 3	M5 x 16 5 3

[1] If 12 x 5/10 mm busbars are used, the spacer SV 9340.090 is additionally required.
[2] 35 mm when using the additional raised section.

Base isolators

Catalogue 33, page 310

	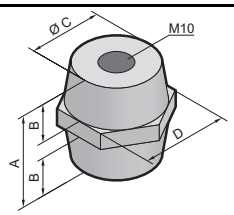	
Rated operating voltage kV	1	1
Power frequency withstand voltage kV	20	37
Impulse withstand voltage kV	12	12
Creep resistance	EN 60 112, CTI 600	EN 60 112, CTI 600
Tensile strength kN	12	13
Torsional strength Nm	75	90
Bending strength kN	6	6
Tightening torque Nm	40	40
A mm	40	50
B mm	15	19
Ø C mm	32	42
D mm	SW 36	SW 50
Model No. SV	**3031.000**	**3032.000**

Busbar cover sections

Catalogue 33, page 311

Approvals: RU E191125	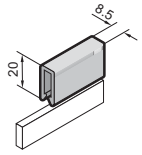	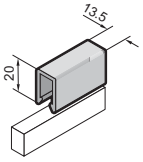	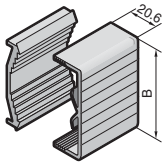	
For busbars mm	12/15 x 5	12/15 x 10	12 x 5 – 30 x 10	40 – 60 x 10
Width (B) mm	–	–	40.6	70.6
Model No. SV	**9350.010**	**9350.060**	**3092.000** RU	**3085.000** RU

RiLine accessories: Busbars

Busbar connectors

Catalogue 33, page 313

Approvals: E191125	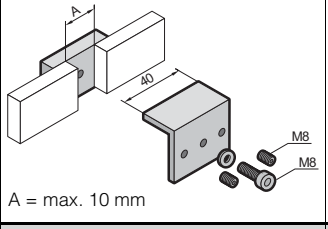 A = max. 10 mm	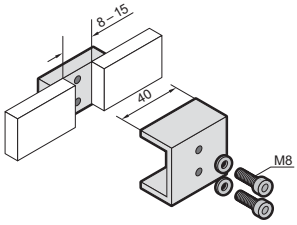	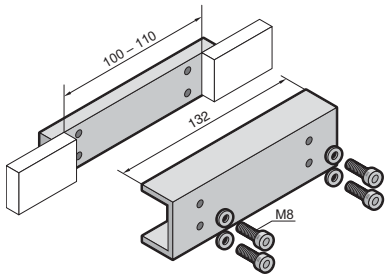
For busbars mm	12 x 5 – 15 x 10	20 x 5 – 30 x 10	20 x 5 – 30 x 10
For application	Single connection	Single connection	Baying connection[1]
Model No. SV	**9350.075**	**9320.020**	**9320.030**
Assembly data for applications to IEC (EN)/UL			
Tightening torque Nm – Screw M8 – Grub screw M8	 5 15	 20 –	 20 –
Max. busbar offset	–	4	5

[1] From enclosure to enclosure (TS 8)

PLS busbar connectors

Catalogue 33, page 313

Approvals: E191125	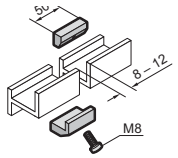		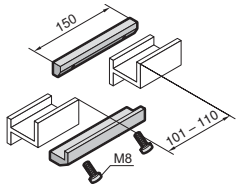	
For application	Single connection		Baying connection[1]	
For system	PLS 800	PLS 1600	PLS 800	PLS 1600
Model No. SV	**3504.000**	**3514.000**	**3505.000**	**3515.000**
Assembly data for applications to IEC (EN)/UL				
Tightening torque Nm – Screw M8	15	20	15	20
Max. busbar offset	4	5	4	5

[1] From enclosure to enclosure (TS 8)

PLS expansion connectors

Catalogue 33, page 313

Note: With a temperature increase of 30 K, the busbars will expand in length by around 0.5 mm/m. Consequently, the use of an expansion connector is recommended for busbar systems with lengths > 3600 mm for thermal compensation. **Approvals:** E191125	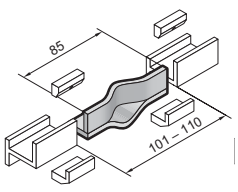	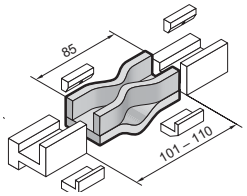
For system	PLS 800	PLS 1600
Model No. SV	**9320.060**	**9320.070**
Also required		
PLS busbar connectors[1]	3504.000	3514.000

[1] Two busbar connectors are needed to fit one expansion connector.

Universal holder

Catalogue 33, page 314

For the attachment of laminated copper bars	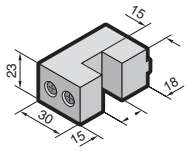
For laminated copper bars mm	5 x 20 x 1 – 10 x 63 x 1[1)]
Model No. SV	**3079.000**

[1)] Number of membranes x membrane width x membrane thickness.

Base tray

Catalogue 33, page 315

For 60 mm busbar systems

Approvals:

c UL us LISTED

E191125

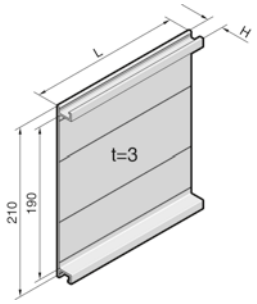

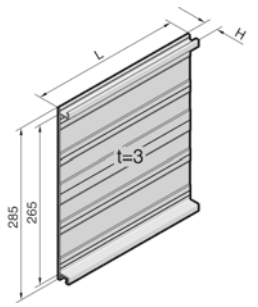

For RiLine60 busbar systems		3-pole			4-pole		
		Flat bars	PLS 800	PLS 1600	Flat bars	30 x 10 PLUS	PLS 1600 PLUS
Height (H) mm		19.5	32	43	19.5	43	43
		Model No. SV			**Model No. SV**		
Length (L) mm	500	**9340.100**	**9341.100**	**9342.100**	–	–	–
	700	**9340.110**	**9341.110**	**9342.110**	–	–	–
	900	**9340.120**	**9341.120**	**9342.120**	–	–	–
	1100	**9340.130**	**9341.130**	**9342.130**	**9340.134**	**9342.134**	**9342.134**
	2400	**9340.170**	**9341.170**	**9342.170**	–	–	–

Base tray infill

Catalogue 33, page 315

For 60 mm busbar systems

Approvals:

c UL us LISTED

E191125

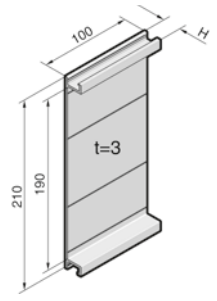

For RiLine60 busbar systems	3-pole		
	Flat bars	PLS 800	PLS 1600
Height (H) mm	19.5	32	43
Model No. SV	**9340.140**	**9341.140**	**9342.140**

RiLine accessories: Contact hazard protection

Cover sections

Catalogue 33, page 315

For 60 mm busbar systems **Note:** If the cover section is loaded from the front, the support panel is needed for stability. **Approvals:** c UL us LISTED E191125	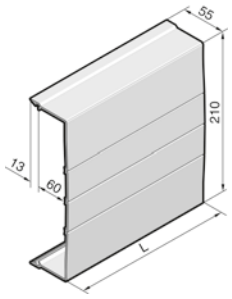	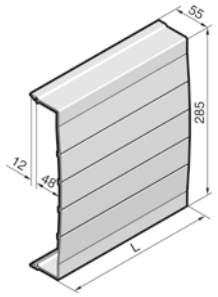

For RiLine60 busbar systems	3-pole			4-pole		
	Flat bars	PLS 800	PLS 1600	Flat bars	30 x 10 PLUS	PLS 1600 PLUS
Length (L) mm	**Model No. SV**			**Model No. SV**		
700	**9340.200** UL			**–**		
1100	**9340.210** UL			**9340.214** UL		

Support panel

for cover section

Catalogue 33, page 315

For 60 mm busbar systems **Approvals:** c UL us LISTED E191125	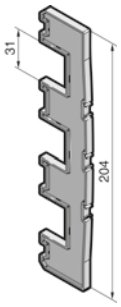	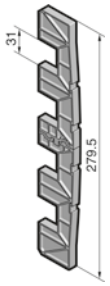

For RiLine60 busbar systems	3-pole			4-pole		
	Flat bars	PLS 800	PLS 1600	Flat bars	30 x 10 PLUS	PLS 1600 PLUS
Model No. SV	**9340.220** UL			**9340.224** UL		

Cross members

Catalogue 33, page 315

For 60 mm busbar systems **Approvals:** c UL us LISTED E191125	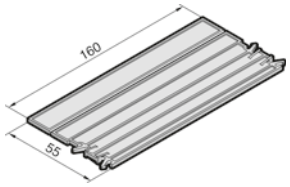
Model No. SV	**9340.230** UL

Conductor connection clamps

Catalogue 33, page 316

Note:
– Current carrying capacity of connection cables, see page 150.
– Technical information on conductor connections, see page 149.

Approvals:

E191125

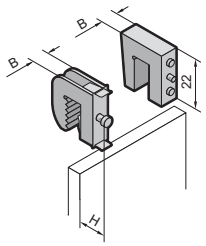

For bar thickness mm	Connection of round conductors[1] mm²	Clamping area for laminated copper bars W x H mm	Tightening torque Nm	Width (B) mm	Height (H) mm		Model No. SV
					min.	max.	
3 – 5	1 – 4	–	2	8.0	–	–	**3550.000**
5	1 – 4	–	2	11.0	17	23	**3450.500**
5	2.5 – 16	8 x 8	3	14.0	22	29	**3451.500**
5	16 – 50	10.5 x 11	8	18.5	26	39	**3452.500**
5	35 – 70	16.5 x 15	12	24.5	39	57	**3453.500**
5	70 – 185	22.5 x 20	15	30.5	44	66	**3454.500**
6 – 10	1 – 4	–	2	8.0	–	–	**3555.000**
10	1 – 4	–	2	11.0	17	23	**3455.500**
10	2.5 – 16	8 x 8	3	14.0	22	29	**3456.500**
10	16 – 50	10.5 x 11	8	18.5	26	39	**3457.500**
10	35 – 70	16.5 x 15	12	24.5	39	57	**3458.500**
10	70 – 185	22.5 x 20	15	30.5	44	66	**3459.500**

[1] Wire end ferrules should be used with fine and extra-fine wire conductors.

Plate clamps

Catalogue 33, page 316

For the electromechanical connection of laminated copper bars with E-Cu busbars.

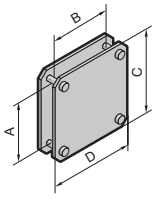

For busbars mm	Clamping area for laminated copper bars W x H mm	Tightening torque Nm	Clearance opening		C mm	D mm	Model No. SV
			A mm	B mm			
12 x 5 – 30 x 10	34 x 10	8	34	34	55	55	**3554.000**
40 x 10	34 x 10	8	44	34	65	55	**3559.000**
50 x 10	34 x 10	8	54	34	75	55	**3560.000**
50 x 10	54 x 10	8	54	54	75	75	**3562.000**
60 x 10	34 x 10	8	64	34	85	55	**3561.000**
60 x 10	54 x 10	8	64	54	85	75	**3563.000**
80 x 10	65 x 10	8	84	65	105	86	**3460.500**

RiLine accessories: Connection system

System covers

Catalogue 33, page 316

For 60 and 100 mm busbar systems (3-pole)

Approvals:

E191125

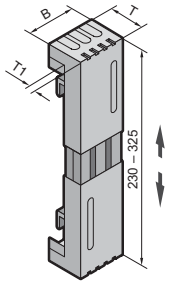

Width (B) mm	Depth (T) mm	Depth (T1) mm	Model No. SV
50	80	40	**3086.000**
100	80	40	**3087.000**
100	110	70	**3090.000**
200	80	40	**3088.000**
200	110	70	**3091.000**

Connection block

Catalogue 33, page 317

Note:
- When using the terminal on 2-pole busbar systems (SV 9340.040, see page 205), the terminal must be rotated through 180° for connection to the PE busbar.
- Technical information on conductor connections, see page 149.
- Current carrying capacity of connection cables, see page 150.

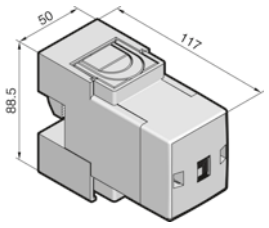

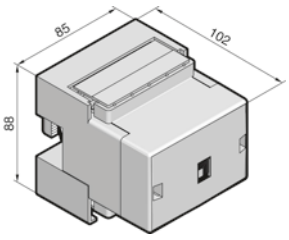

Model No. SV	9342.311	9342.321
Assembly data for applications to IEC (EN)		
Conductor connection Cu mm²		
– f with wire end ferrule	95 – 185[1)]	–
– rm	95 – 300	–
Clamping area for laminated copper bars W x H mm		
– For 5 mm bar thickness	33 x 27	65 x 27
– For 10 mm bar thickness	33 x 22	65 x 22
Tightening torque Nm	14	20
Material specifications		
Contact track: E-Cu, silver-plated	■	■
Conductor connection clamp: Cast brass, nickel-plated	■	–
Conductor connection clamp: Stainless steel	–	■

[1)] Connection up to 240 mm², fine-wire without wire end ferrule with a tightening torque of 20 Nm.

Support frame

Catalogue 33, page 320

For OM adaptor and OM support	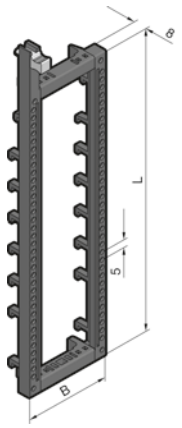			
Width (B) mm	45	45	55	55
Length (L) mm	170	237	170	237
Model No. SV	**9341.800**	**9341.820**	**9341.830**	**9341.850**

Connection bracket

Catalogue 33, page 322

For circuit-breaker component adaptor	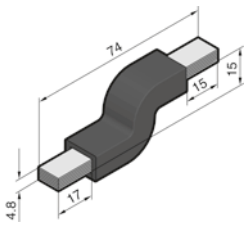	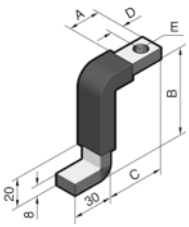			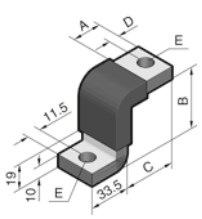		
Dimensions[1] mm	6 x 9 x 0.8	10 x 15.5 x 0.8			10 x 32 x 1		
A mm	–	26	19	23	19	26	29	28
B mm	–	65	66	71	67	51	57	62
C mm	–	43	36	40	36	62	46	38
D mm	–	9	10	9	7	9	12	14
E mm	–	Ø 11	Ø 11	Ø 11	Ø 8	Ø 12	Ø 12	Ø 12
Model No. SV	**9342.570**	**9342.660**	**9342.670**	**9342.680**	**9342.690**	**9342.770**	**9342.780**	**9342.790**

[1] Number of membranes x membrane width x membrane thickness.

RiLine accessories: For RiLine NH fuse elements

Busbar adaptor 100 mm

for NH fuse-switch disconnectors sizes 1 to 3, for mounting plate assembly
Catalogue 33, page 324

Note:
For mounting NH fuse-switch disconnectors size 1 to 3 on busbar systems with 100 mm bar centre distance, an additional mounting hole (d = 5.5 mm) must be drilled in the respective disconnector chassis as shown in the assembly instructions, stage **1** opposite. The busbar adaptor is then mounted on the busbar using M10 screws, see stages **2** and **3**, and the disconnector is secured onto the adaptor as shown in stages **4** to **6**.

Assembly instructions

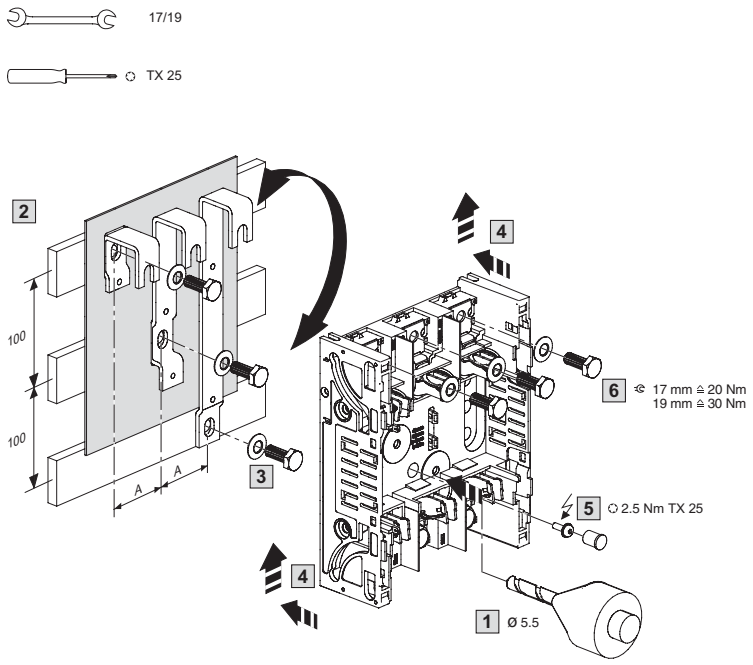

For NH disconnectors		Distance (A) mm	**Model No. SV**
Size	Model No. SV		
1	9344.110 9344.130 9344.150	57	**9344.810**
2	9344.210 9344.230 9344.250	65	**9344.820**
3	9344.310 9344.330 9344.350	80	**9344.830**

Prism terminal

for NH disconnectors size 00 with screw terminal
Catalogue 33, page 323

Connection		Tightening torque Nm	**Model No. SV**
Round conductor mm^2	Sector-shaped conductor mm^2		
10 – 70	10 – 70	3	**9344.600**

Box terminals

for NH disconnectors sizes 1 to 3 with screw terminal
Catalogue 33, page 323

For NH disconnectors	Clamping area for laminated copper bars W x H mm	Connection		Tightening torque Nm	**Model No. SV**
		Round conductor mm^2	Sector-shaped conductor mm^2		
Size 1	20 x 14	35 – 150	50 – 150	12	**9344.610**
Size 2/3	32 x 20	95 – 300	120 – 300	20	**9344.620**

Connection space cover

Catalogue 33, page 323

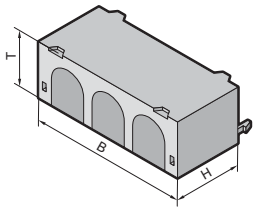

For NH disconnectors	Width (B) mm	Height (H) mm	Depth (T) mm	Model No. SV
Size 00	106	46	37	**9344.520**
Size 1	184	70	42	**9344.530**
Size 2	210	70	42	**9344.540**
Size 3	250	70	42	**9344.550**

Lug terminal connection parts

for NH slimline fuse-switch disconnectors, size 00

Catalogue 33, page 324

Connection of round conductors mm^2	Clamping area for laminated copper bars W x H mm	Tightening torque Nm	Model No. SV
1.5 – 25	16 x 10	4	**3592.020**

Clamp-type terminal connection

for NH slimline fuse-switch disconnectors, size 00

Catalogue 33, page 325

Connection of round conductors mm^2	Tightening torque Nm	Model No. SV
1.5 – 95	4	**3592.010**

Busbar systems (100/185/150 mm)

Busbar supports (3-pole)

Catalogue 33, page 340

Note:
SV 3052.000
The base component of the busbar support may also be used as a single-pole support.

Technical information
for the calculation of rated currents to DIN 43 671, see page 152/153.

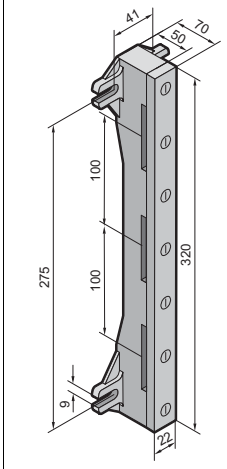

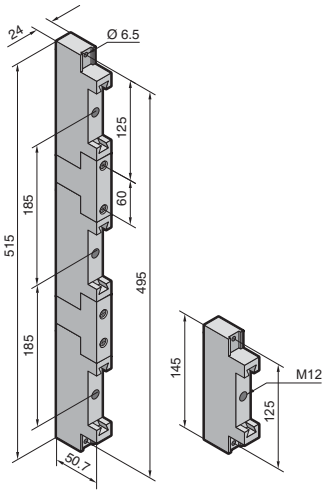

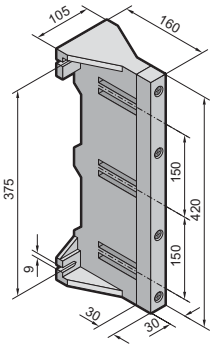

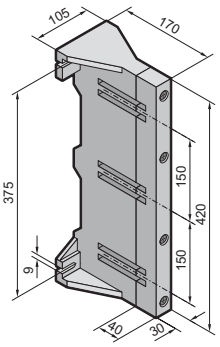

For bar systems	1250 A	1600 A	2500 A	3000 A
Bar centre distance mm	100	185	150	150
Max. bar accommodation without inserts mm	60 x 10	80 x 10	2 x 80 x 10	2 x 100 x 10
Inserts for – Reducing the cross-section to mm – Reducing the bar width in 10 mm increments	30 x 10 bis 50 x 10 –	50/60 x 10 –	– ■	– ■
Model No. SV	**3073.000**	**3052.000**	**3055.000**	**3057.000**
Assembly data for applications to IEC (EN)				
Tightening torque Nm – Assembly screw – Lid attachment – Bar fastening screw	 10 3 –	 5 – 40	 10 10 –	 10 10 –

Connection plates

for busbar supports SV 3055.000/SV 3057.000

Catalogue 33, page 341

[1] **Note:**
When using 100 x 10 mm busbars, one connection plate per teminal connection is omitted.

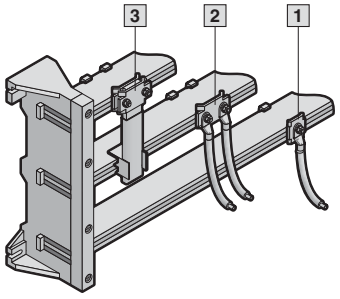

Connection for	For busbar supports	T-head screw	Tightening torque Nm	**Model No. SV**
1 Ring terminal M10 up to 240 mm²	SV 3055.000	M10 x 100 mm	15	**3058.000**
2 2 x ring terminals M10 up to 240 mm²	SV 3055.000	M10 x 100 mm	15	**3059.000**
3 Laminated flat copper up to 40 x 10 mm	SV 3055.000	M10 x 120 mm	15	**3061.000**
3 2 x ring terminals M10[1] up to 240 mm²	SV 3057.000	M10 x 120 mm	15	**3061.000**

Maxi-PLS 1600/2000

Catalogue 33, page 328

Busbar support
Model No. SV 9649.000

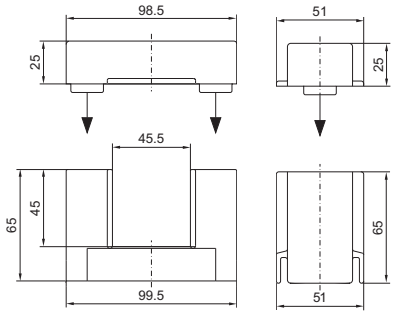

Busbar support, suitable for top mounting
Model No. SV 9649.160

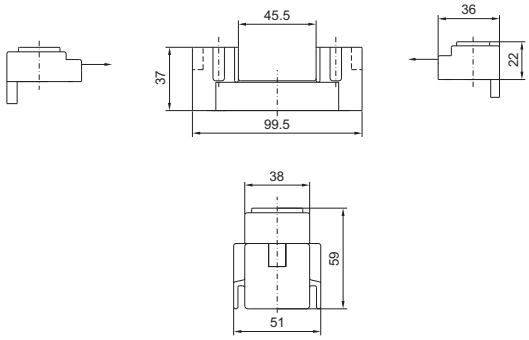

End supports
Model No. SV 9649.010

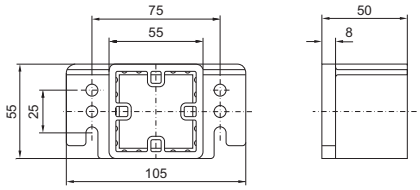

Maxi-PLS 3200

Catalogue 33, page 328

Busbar support
Model No. SV 9659.000

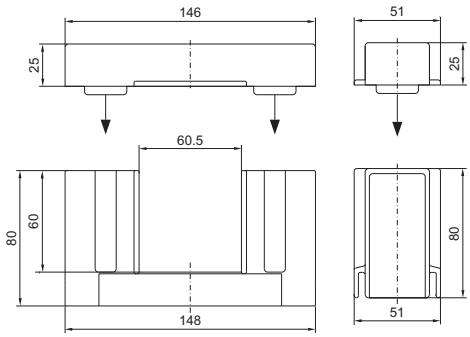

Busbar support, suitable for top mounting
Model No. SV 9659.160

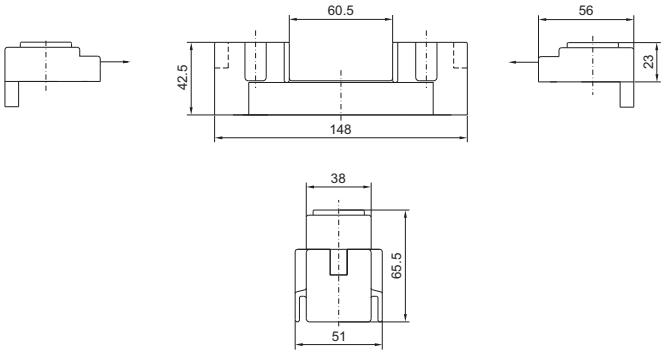

End supports
Model No. SV 9659.010

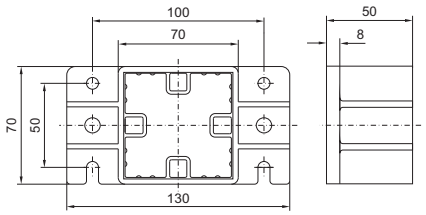

Stabiliser
Model No. SV 9650.140

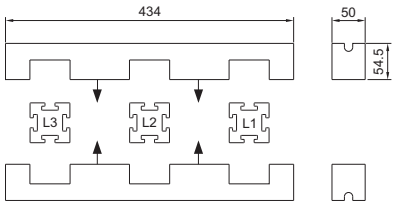

Maxi-PLS system components

Maxi-PLS 1600/2000/3200

Catalogue 33, page 329

Isolator chassis

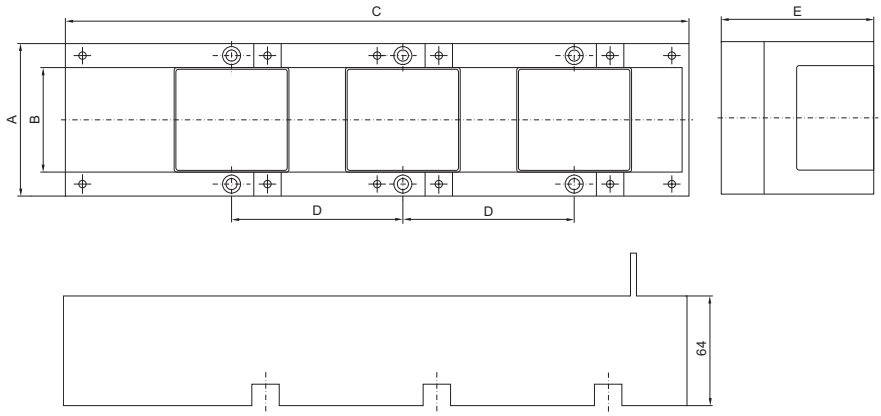

Model No. SV	A	B	C	D	E
9640.021	89	61	346	100	89
9650.021	89	61	479	150	94
9650.031	129	101	479	150	94

Connection clamp
Model No.
SV 9640.325
SV 9650.325

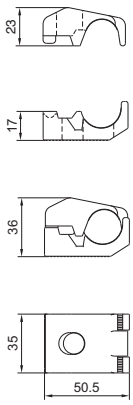

Connection plates

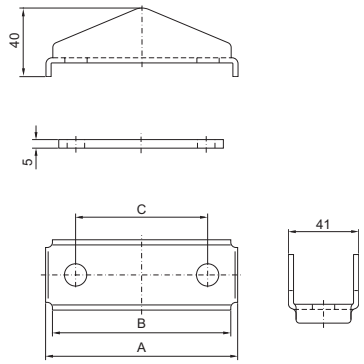

Model No. SV	Size	A mm	B mm	C mm	T-head screws	Tightening torque
9640.330	1	81	73	46	M10	20 Nm
9640.340	2	112	104	77	M10	25 Nm
9640.350	3	149	141	114	M10	30 Nm
9650.330	1	81	73	46	M12	25 Nm
9650.340	2	112	104	77	M12	30 Nm
9650.350	3	149	141	114	M12	35 Nm

Terminal studs (1600/2000)

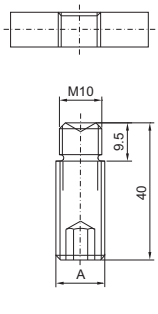

Terminal studs (3200)

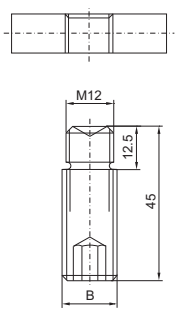

Model No. SV	A	B
9640.370	M12	–
9640.380	M16	–
9650.370	–	M12
9650.380	–	M16

Sliding nuts (1600/2000)

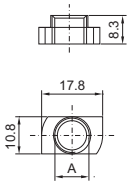

Sliding nuts (3200)

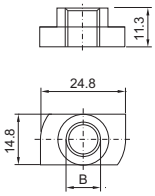

Model No. SV	A	B
9640.900	M6	–
9640.910	M8	–
9640.920	M10	–
9650.900	–	M6
9650.905	–	M8
9650.910	–	M10
9650.920	–	M12

Divider panel

Catalogue 33, page 331

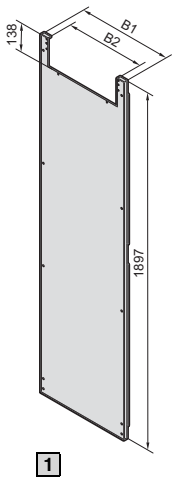

1

Model No. SV	For enclosure height mm	W (B1) mm	W (B2) mm
9660.620	2000	502	418
9659.590	2000	702	618

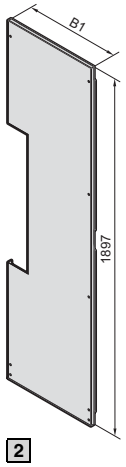

2

Model No. SV	For enclosure height mm	W (B1) mm
9660.610	2000	502
9659.580	2000	702

Flat-PLS system components

Flat-PLS 60/100

Catalogue 33, see page 332

Model No.
SV 9676.002
SV 9676.004

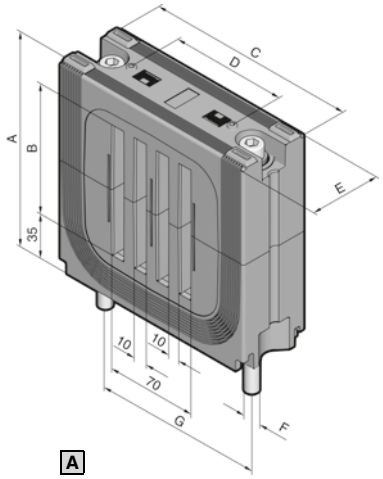

A

Model No.
SV 9676.020
SV 9676.021

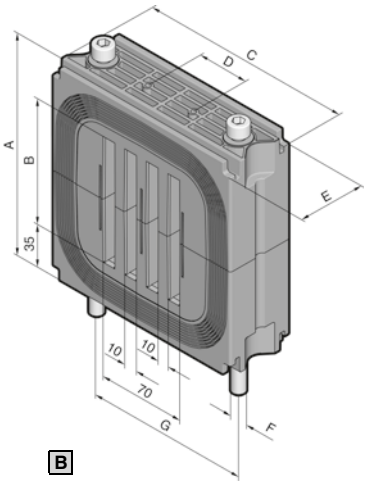

B

A Busbar support Flat-PLS

System	For busbars up to mm	A mm	B mm	C mm	D mm	E mm	F	Tightening torque	G mm	**Model No. SV**
Flat-PLS 60	4 x 60 x 10	127.5	60	120	70	50	M8	8 Nm	100	**9676.002**
Flat-PLS 100	4 x 100 x 10	162.5	100	165	90	55	M10	9 Nm	125	**9676.004**

B Busbar support Flat-PLS for stabiliser bar

System	For busbars up to mm	A mm	B mm	C mm	D mm	E mm	F	Tightening torque	G mm	**Model No. SV**
Flat-PLS 60	4 x 60 x 10	130	60	120	70	50	M8	10 Nm	100	**9676.020**
Flat-PLS 100	4 x 100 x 10	170	100	165	90	55	M10	12 Nm	125	**9676.021**

Flat-PLS 60/100

Busbar claws

Catalogue 33, page 333

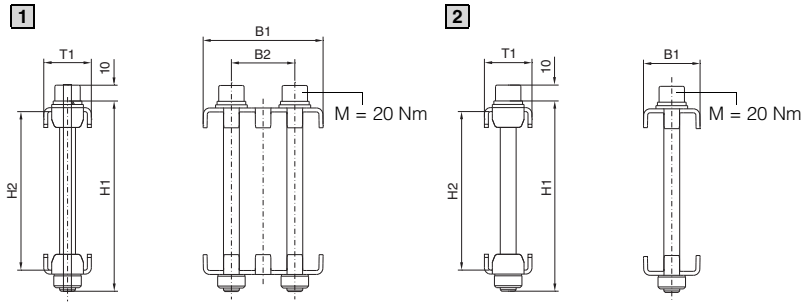

Model No. SV	W (B1) mm	W (B2) mm	H1	H2	D (T1) mm
9676.017 2	35.7	–	1)	+2/–3 2)	30
9676.018 1	55.7	20	1)	+2/–3 2)	30
9676.019 1	75.7	40	1)	+2/–3 2)	30

1) Length of screw (to be ordered separately).
2) With reference to the required screw H2 = H1 – 20 (H1 ≙ length of screw).

Contact makers

Catalogue 33, page 334

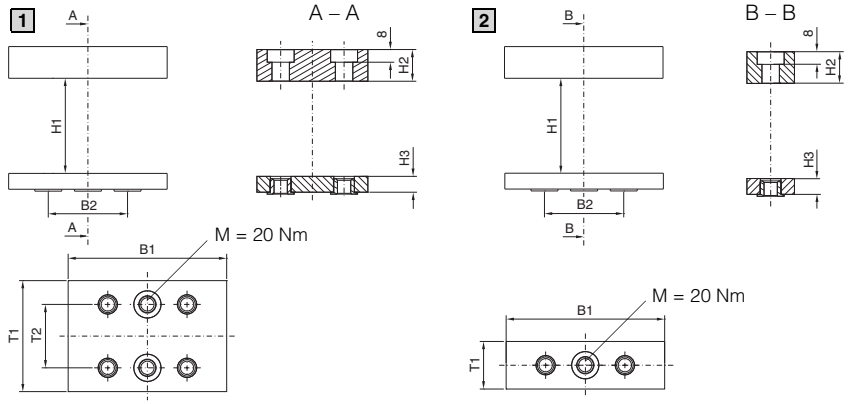

Model No. SV	W (B1) mm	W (B2) mm	H1 mm	H2 mm	H3 mm	D (T1) mm	D (T2) mm
9676.526 2	60	36	40 – 100	20	10	30	–
9676.546 1	60	36	40 – 100	20	10	70	40
9676.528 2	80	50	40 – 100	20	10	30	–
9676.548 1	80	50	40 – 100	20	10	70	40
9676.520 2	100	50	40 – 100	20	10	30	–
9676.540 1	100	50	40 – 100	20	10	70	40

Longitudinal connectors

Catalogue 33, page 333

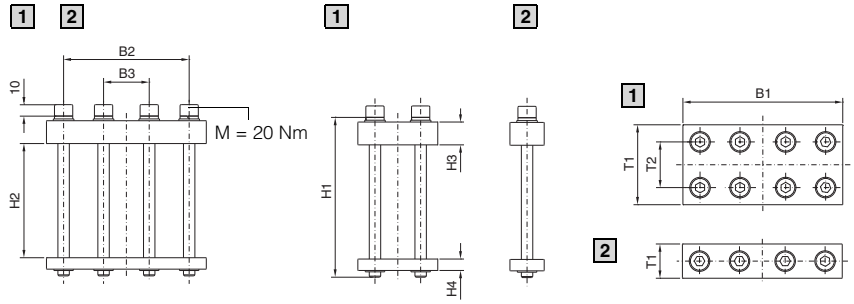

Model No. SV	W (B1) mm	W (B2) mm	W (B3) mm	H1 mm	H2 mm	H3 mm	H4 mm	D (T1) mm	D (T2) mm
9676.621 2	140	110	40	1)	H1 – 40	20	10	30	–
9676.641 1	140	110	40	1)	H1 – 40	20	10	70	40

1) Length of screw (to be ordered separately).

Edge cover section without spacer

Catalogue 33, page 333

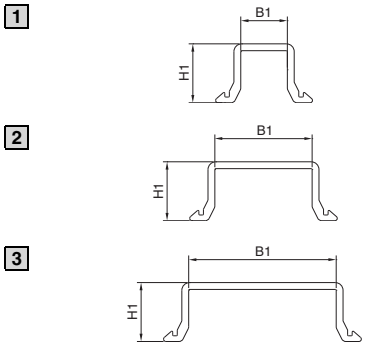

Model No. SV	W (B1) mm	H1 mm
9676.041 1	10.2	12.9
9676.042 2	21.3	12.9
9676.043 3	32.3	12.9

Edge cover section with spacer

Catalogue 33, page 333

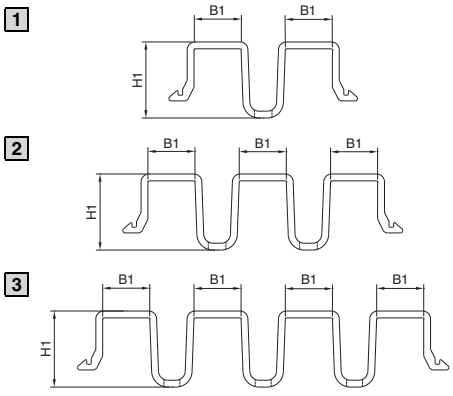

Model No. SV	W (B1) mm	H1 mm
9676.052 1	10.3	16.6
9676.053 2	10.3	16.6
9676.054 3	10.3	16.6

Side cover section

Catalogue 33, page 333

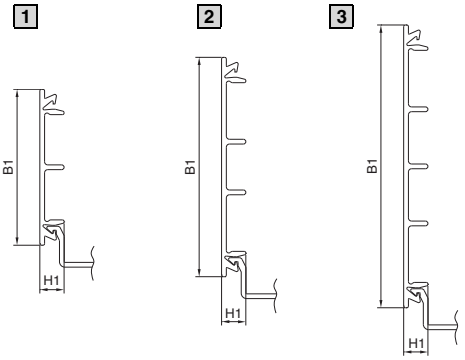

Model No. SV	W (B1) mm	H1 mm
9676.056 1	49.2	7.6
9676.058 2	69.2	7.6
9676.059 3	89.2	7.6

Flat-PLS system components

Flat-PLS 60/100

Connection plates with bolts M12/M16
Catalogue 33, page 335

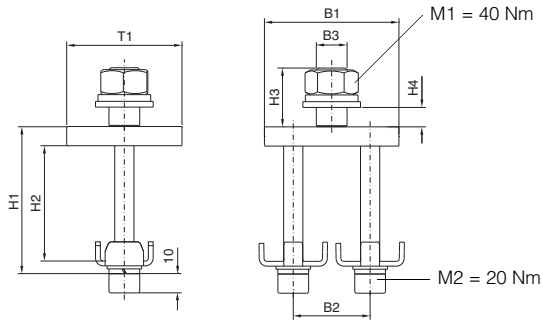

Model No. SV	W (B1) mm	W (B2) mm	W (B3) mm	H1	H2 mm	H3 mm	H4 mm	D (T1) mm
9676.700	70	40	M12	1)	H1 – 21.5	30.6	15.6	60
9676.704	70	40	M16	1)	H1 – 21.5	30.6	11.1	60

1) Length of screw (to be ordered separately).

Direct connection terminals
Catalogue 33, page 335

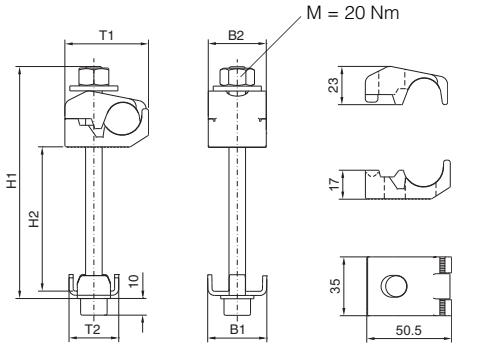

Model No. SV	W (B1) mm	W (B2) mm	H1	H2 mm	D (T1) mm	D (T2) mm
9676.730	35.7	35	1)	H1 – 60	50.5	30

1) Length of screw (to be ordered separately).

Connection plates with bolts M10
Catalogue 33, page 335

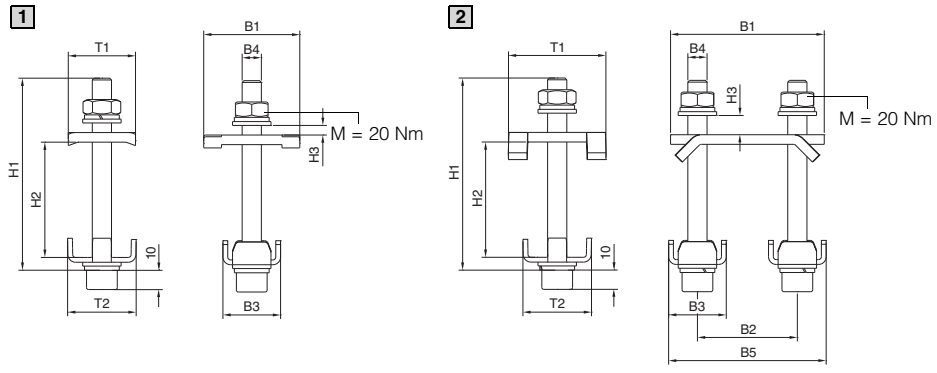

Model No. SV	W (B1) mm	W (B2) mm	W (B3) mm	W (B4) mm	W (B5) mm	H1	H2 mm	H3 mm	D (T1) mm	D (T2) mm
9676.710 1	50	–	30	M10	–	1)	H1 – 40	5	35	35.7
9676.714 2	80	52	30	M10	82	1)	H1 – 40	10	50	35.7

1) Length of screw (to be ordered separately).

Connection plates for laminated copper bars
Catalogue 33, page 335

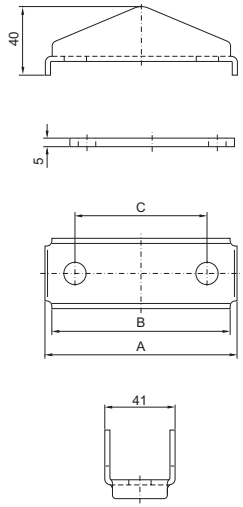

Model No. SV	Size	A mm	B mm	C mm	Tightening torque
9676.747	1	81	73	46	20 Nm
9676.748	2	112	104	77	25 Nm
9676.749	3	149	141	114	30 Nm

Terminal block, distribution busbar
Catalogue 33, page 358

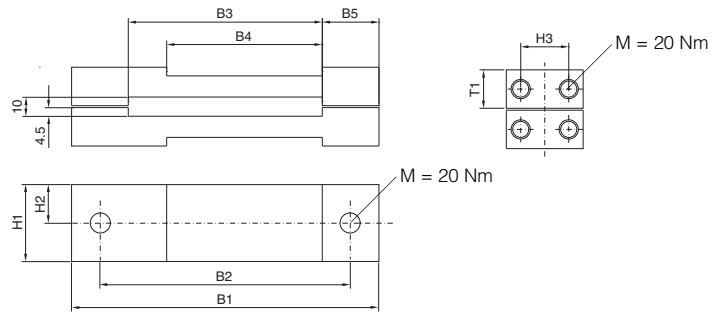

Model No. SV	W (B1) mm	W (B2) mm	W (B3) mm	W (B4) mm	W (B5) mm	H1 mm	H2 mm	H3 mm	D (T1) mm
9674.485	160	130	61	51	29.5	40	20	25	20
9674.488	160	130	101	81	29.5	40	20	25	20

Claw with threaded insert M10
Catalogue 33, page 335

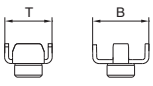

Model No. SV	W (B) mm	D (T) mm	Tightening torque
9676.832	37.5	30	20 Nm

Stacking insulator

Catalogue 33, page 337

	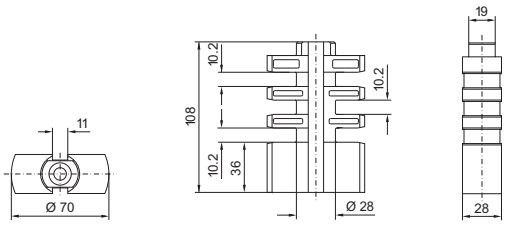
Model No. SV	**9660.200**

Cover systems: Form 1

Device modules

Catalogue 33, see page 342

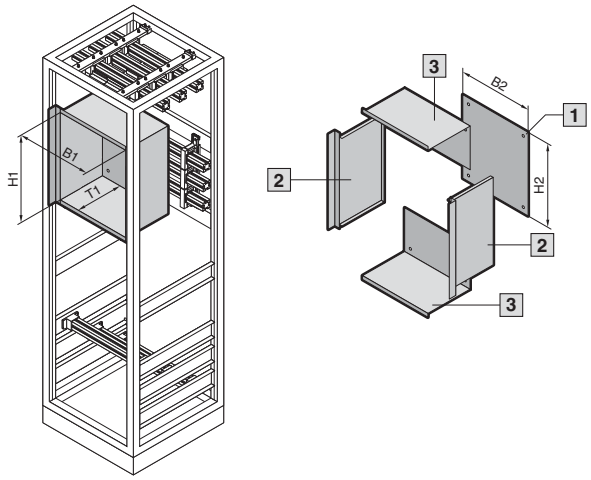

Enclosure width mm	Internal dimensions			Mounting plate		Model No. SV
	W (B1) mm	H1 mm	D (T1) mm	W (B2) mm	H2 mm	
600	432	263	245.5	420	250	**9660.700**
						9660.760
800	632	263	245.5	620	250	**9660.710**
						9660.770

Contact hazard protection cover

Catalogue 33, page 342/343

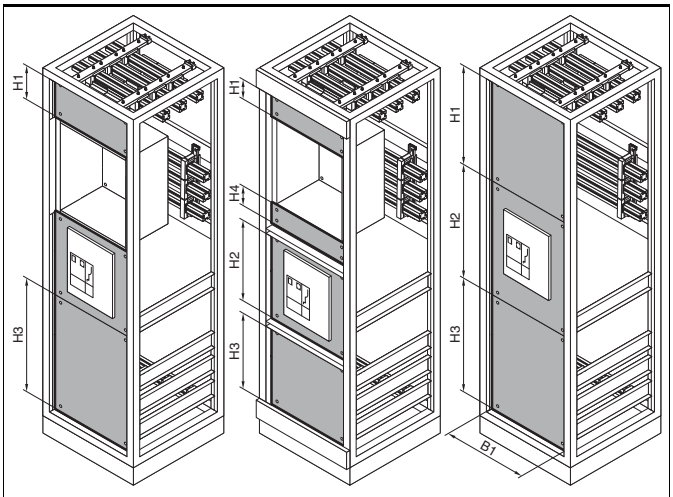

With device module single-door

With device module 3-door

With device module single-/3-door

Width B1 mm	Height mm				Model No. SV
	Top H1	Centre H2	Bottom H3	Trim panel H4	
506	204	656	721	–	**9660.280**
506	246.5	567	567	20	**9660.290**
706	204	656	721	–	**9660.380**
706	246.5	567	567	20	**9660.390**
506	526	656	721	–	**9660.780**
506	567	567	567	–	**9660.790**
706	526	656	721	–	**9660.880**
706	567	567	567	–	**9660.890**

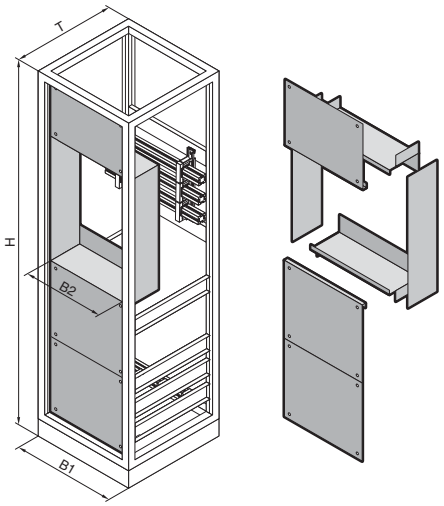

Width B1 mm	Height H mm	Depth T mm	Width B2 mm[1)]			Model No. SV
			Use of longitudinal connectors			
			none	one side	both sides	
600	2000	600	500	450	400	**9660.460**
800	2000	600	700	650	600	**9660.470**
1000	2000	600	900	850	800	**9660.480**
1200	2000	600	1100	1050	1000	**9660.490**

[1)] Available installation width for Rittal NH slimline fuse-switch disconnectors.

Functional space divider

Catalogue 33, page 349

With louvres

Model No. SV	Width of entry (B) mm	Depth of entry (T) mm
9673.436	212	201
9673.438	212	201
9673.456	412	201
9673.458	412	201
9673.476	612	201
9673.478	612	201

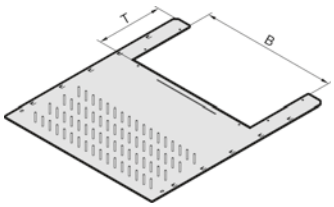

Installation modules: ISV distribution enclosures

Mounting plate modules

Catalogue 33, page 362

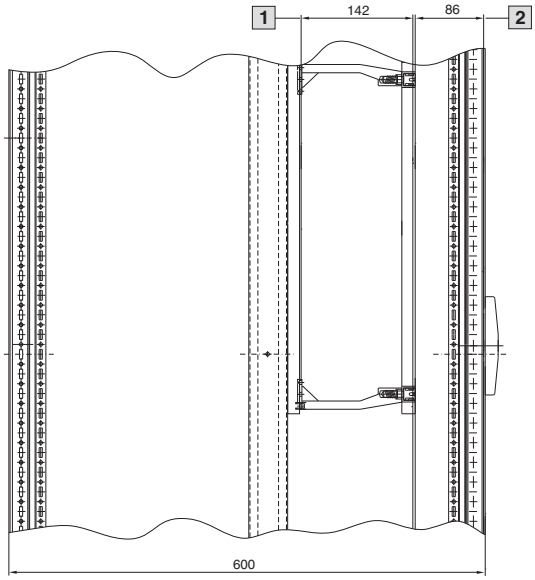

Clearance frame

1 Mounting plate module

2 Contact hazard protection

Support rail modules

Catalogue 33, page 362

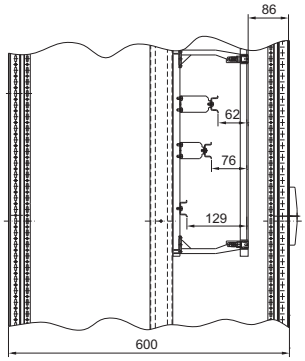

DIN rail mounted device modules

Catalogue 33, page 363

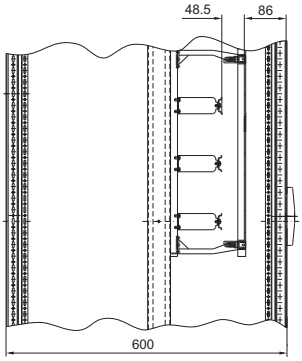

UPS PMC 40/120/200

Catalogue 33, from page 373

Modular rack-mounting, energy-efficient, high-MTBF – these three attributes of Rittal UPS technology help to ensure low costs. Easily adapted to suit your specific requirements, its space requirements are minimal, and maintenance work can be carried out quickly with the system operational. That's how efficient it is to ensure almost 100% availability.

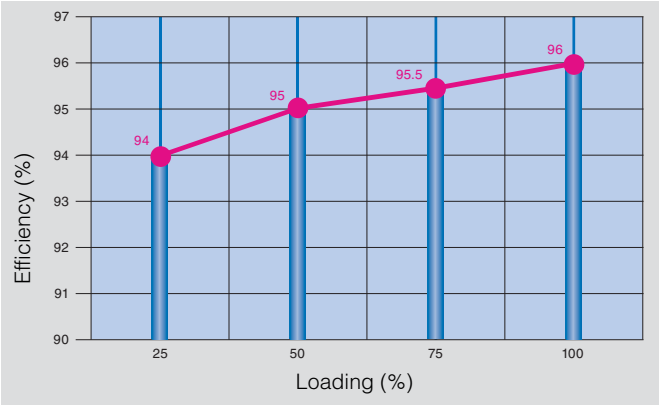

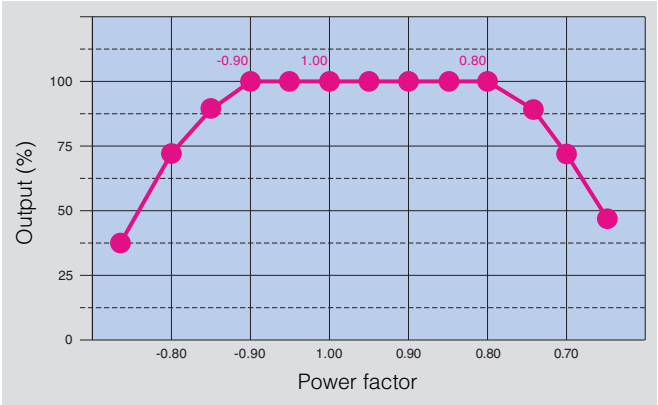

Efficiency
Particularly in the lower load range, a high efficiency really comes into its own, and also ensures significantly lower heat loss dissipation.

Capacitive load
The capacitive load is increasing in the IT environment. The UPS must be designed accordingly. The PMC 200 can emit constant and full active power from 0.9 kW capacitive to 0.8 kW inductive.

Category	UPS classification to EN 620 40-3	Rittal UPS
1	**VFI:** UPS output independent of mains voltage and frequency variations within the limits to IEC 61 000-2-2 (**V**oltage and **F**requency **I**ndependent)	PMC 200 PMC 120 PMC 40 PMC 12
2	**VI:** UPS output frequency dependent on mains frequency, voltage stabilised (electronic/passive) within the limits for normal operation (**V**oltage **I**ndependent)	
3	**VFD:** UPS output dependent on mains voltage and frequency variations (**V**oltage and **F**requency **D**ependent)	

UPS PMC 12

Catalogue 33, page 372

Increase output with parallel connection
Block diagram parallel redundant UPS DK 7857.433/.434

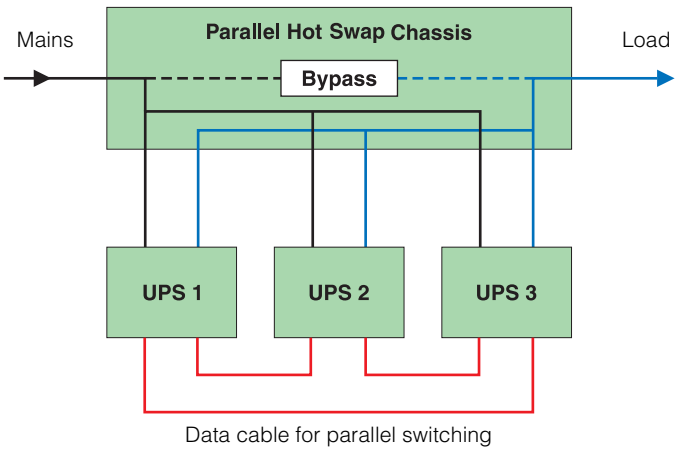

Parallel hot swap chassis:
The parallel hot swap chassis for the 4.5 kVA and 6 kVA module allows up to 3 UPS systems to be connected together. This can be used to boost output and to achieve N+1 redundancy. An **external bypass** is additionally integrated into the Parallel Hot Swap Chassis.

PDM for PMC 12:
Single-phase power distribution for use with the Parallel Hot Swap Chassis DK 7857.444. The PDM offers the opportunity of connecting two single-phase 32 A CEE connectors and four EN 60 320 C19 16 A connectors. All outputs have pre-fuses.

UPS systems

UPS PMC 40

Catalogue 33, page 373

PMC 40 – compact, rack-independent UPS system (up to 40 kW, 3-phase)
This uses double conversion UPS technology according to the highest classification VFI-SS-111, which provides a constant output irrespective of the incoming voltage, coupled with a high overall efficiency and minimal space requirements.

The PMC 40 may be configured as a redundant system. As a general principle, it is important to ensure adequate climate control of the rack where the PMC 40 is installed. For installation purposes, the rack must have two 482.6 mm (19˝) mounting levels and a minimum depth of 800 mm. Depending on the configuration, mixed population (e.g. with servers) in the same rack is also supported.
The PMC 40 (redundant design) has “safe swap” capabilities. This allows easy, safe module exchange while the system is operational, without having to switch the UPS to bypass mode. Installation, commissioning and maintenance must only be carried out by qualified personnel who have been authorised by Rittal.

UPS PMC 40 (type 1-4)

Batteries of type 12 V/7 Ah

Basic unit	Model No.	Number of modules	Battery	Number of batteries
PMC 40 type 1[1)]	7040.010	1[1)]	7040.211	40
PMC 40 type 2	7040.020	1	7040.212	80
PMC 40 type 3[1)]	7040.030	2[1)]	7040.212	80
PMC 40 type 4	7040.040	2	7040.214	160

[1)] With 10 kW modules only

Overview of autonomy (Internal batteries of type 12 V/7 Ah)

Common internal battery configuration of the UPS PMC 40 (type 1-4)			Battery autonomy in minutes depending on module type and UPS load				
Module type			1 x 7040.110 (10 kW)		1 x 7040.120 (20 kW)		
With 1 UPS module and the following battery configuration	Batteries per bank	Total number of batteries	Total system performance				
			8 kW (80%)	10 kW (100%)	12 kW (60%)	16 kW (80%)	20 kW (100%)
7040.211	40	40	8	6	5	[1)]	[1)]
7040.212	40	80	21	15	12	8	5
7040.214	40	160	47	35	28	18	5
Module type			2 x 7040.110 (2 x 10 kW)		2 x 7040.120 (2 x 20 kW)		
With 2 UPS modules and the following battery configuration	Batteries per bank	Total number of batteries	Total system performance				
			16 kW (80%)	20 kW (100%)	24 kW (60%)	32 kW (80%)	40 kW (100%)
7040.211	40	40	[1)]	[1)]	[1)]	[1)]	[1)]
7040.212	40	80	8	6	5	[1)]	[1)]
7040.214	40	160	20	15	11	8	5

[1)] Combination not possible.

Note:
At half the UPS load, the autonomy (bridging time) is doubled in a linear pattern
(in other words, for a capacity utilisation of 30%, 40%, 50%, the autonomies are double those shown in the table for 60%, 80%, 100%).
At full load, PMC 40 20 kW modules always require two battery banks (2 x 40 x 7 Ah) and then achieve an autonomy of max. 5 min.
Longer autonomies are only possible with UPSs PMC (type 5)/PMC 120 NX.

UPS PMC 40 (type 5)

Catalogue 33, page 374

Overview of autonomy (Internal batteries of type 12 V/7 Ah)

Common internal battery configuration of the UPS PMC 40 (type 5)			Battery autonomy in minutes depending on UPS load				
Module type			1 x 7040.110 (10 kW)		1 x 7040.120 (20 kW)		
With 1 UPS module and the following battery configuration	Batteries per bank	Total number of batteries	Total system performance				
			8 kW (80%)	10 kW (100%)	12 kW (60%)	16 kW (80%)	20 kW (100%)
2 x 7040.311	40	80	21	15	12	8	5
2 x 7040.315	50	100	28	21	16	11	8
3 x 7040.311	40	120	35	26	21	14	5
3 x 7040.315	50	150	47	35	28	19	14
4 x 7040.315	50	200	69	52	41	28	21
6 x 7040.311	40	240	88	66	52	35	5
Module type			2 x 7040.110 (2x 10 kW)		2 x 7040.120 (2x 20 kW)		
With 2 UPS modules and the following battery configuration	Batteries per bank	Total number of batteries	Total system performance				
			16 kW (80%)	20 kW (100%)	24 kW (60%)	32 kW (80%)	40 kW (100%)
2 x 7040.311	40	80	8	6	5	– [1]	– [1]
2 x 7040.315	50	100	11	8	7	4	– [1]
3 x 7040.311	40	120	14	11	8	6	5
3 x 7040.315	50	150	19	14	11	8	6
4 x 7040.315	50	200	28	21	16	11	8
6 x 7040.311	40	240	35	26	21	14	5
Module type			3 x 7040.110 (3x 10 kW)		3x 7040.120 (3x 20 kW)		
With 3 UPS modules and the following battery configuration	Batteries per bank	Total number of batteries	Total system performance				
			24 kW (80%)	30 kW (100%)	36 kW (60%)	48 kW (80%)	60 kW (100%)
2 x 7040.315	50	100	7	5	4	– [1]	– [1]
3 x 7040.311	40	120	8	6	5	– [1]	– [1]
4 x 7040.311	40	150	12	9	7	5	4
4 x 7040.315	50	200	16	12	10	7	5
6 x 7040.311	40	240	21	15	12	8	5

[1] Combination not possible.

Note:
At half the UPS load, the autonomy (bridging time) is doubled in a linear pattern
(in other words, for a capacity utilisation of 30%, 40%, 50%, the autonomies are double those shown in the table for 60%, 80%, 100%).
At full load, PMC 40/PMC 120 20 kW modules always require battery banks of 50 (7040.315).

PMC 40 (type 5) module type (max. 3 modules)		Battery autonomy in minutes per UPS module				
		PMC 40/PMC 120 10 kW module		PMC 40/PMC 120 20 kW module[2]		
Separate internal battery per module						
Model No. battery	Battery bank per module (max. 3 modules)	8 kW	10 kW	12 kW	16 kW	20 kW
7040.311	(1 x 40) x 7 Ah = 40 (120)	8	6	5	– [1]	– [1]
7040.315	(1 x 50) x 7 Ah = 50 (150)	11	8	7	4	– [1]
2 x 7040.311	(2 x 40) x 7 Ah = 80 (240)	21	15	12	8	5

[1] Combination not possible. [2] Module needs at least 50 blocks for full output or at least 2 x 40 blocks for 16 kW.

UPS systems

UPS PMC 120

Catalogue 33, page 375

Overview of autonomy (External batteries of type 12 V/28 Ah)

Common external battery configuration of the UPS PMC 120				Battery autonomy in minutes depending on UPS load				
Module type				1 x 7040.110 (10 kW)		1 x 7040.120 (20 kW)		
With 1 UPS module and the following battery configuration Model No. battery rack	Battery Model No. (x = quantity)	Batteries per bank	Total number of batteries	Total system performance				
				8 kW (80%)	10 kW (100%)	12 kW (60%)	16 kW (80%)	20 kW (100%)
7857.590	7857.374 x 4	40	40	54	41	32	22	5
7857.590	7857.374 x 8	40	80	134	101	79	55	5
7857.590	7857.374 x 12	40	120	227	170	134	93	5
7857.590 x 2	7857.374 x 16	40	160	329	247	195	134	5
7857.590 x 2	7857.374 x 20	40	200	425	319	253	175	5
7857.590 x 2	7857.374 x 24	40	240	536	403	319	221	5
7857.364/7040.361	7857.374 x 5	50	50	72	54	43	30	22
7857.364/7040.361	7857.374 x 10	50	100	179	134	106	73,5	54
7857.364/7040.361	7857.374 x 15	50	150	303	227	179	124	91
7857.364/7040.361 x 2	7857.374 x 20	50	200	439	329	260	179	131
7857.364/7040.361 x 2	7857.374 x 25	50	250	565	425	336	233	175
7857.364/7040.361 x 2	7857.374 x 30	50	300	713	536	425	294	221
Module type				2 x 7040.110 (20 kW)		2 x 7040.120 (40 kW)		
With 2 UPS modules and the following battery configuration Model No. battery rack	Battery Model No. (x = quantity)	Batteries per bank	Total number of batteries	Total system performance				
				16 kW (80%)	20 kW (100%)	24 kW (60%)	32 kW (80%)	40 kW (100%)
7857.590	7857.374 x 4	40	40	22	16	13	9	5
7857.590	7857.374 x 8	40	80	55	40	31	22	5
7857.590	7857.374 x 12	40	120	93	68	53	37	5
7857.590 x 2	7857.374 x 16	40	160	134	99	77	54	5
7857.590 x 2	7857.374 x 20	40	200	175	131	103	72	5
7857.590 x 2	7857.374 x 24	40	240	221	166	131	91	5
7857.364/7040.361	7857.374 x 5	50	50	30	22	17	12	9
7857.364/7040.361	7857.374 x 10	50	100	73	54	42	29	22
7857.364/7040.361	7857.374 x 15	50	150	124	91	71	49	37
7857.364/7040.361 x 2	7857.374 x 20	50	200	179	132	103	72	54
7857.364/7040.361 x 2	7857.374 x 25	50	250	233	175	138	96	72
7857.364/7040.361 x 2	7857.374 x 30	50	300	294	221	175	121	91
Module type				3 x 7040.110 (30 kW)		3 x 7040.120 (60 kW)		
With 3 UPS modules and the following battery configuration Model No. battery rack	Battery Model No. (x = quantity)	Batteries per bank	Total number of batteries	Total system performance				
				24 kW (80%)	30 kW (100%)	36 kW (60%)	48 kW (80%)	60 kW (100%)
7857.590	7857.374 x 4	40	40	13	9	7	5	– [1]
7857.590	7857.374 x 8	40	80	32	24	18	13	– [1]
7857.590	7857.374 x 12	40	120	54	41	32	22	– [1]
7857.590 x 2	7857.374 x 16	40	160	78	59	46	32	– [1]
7857.590 x 2	7857.374 x 20	40	200	104	78	61	43	– [1]
7857.590 x 2	7857.374 x 24	40	240	131	99	77	54	– [1]
7857.364/7040.361	7857.374 x 5	50	50	17	13	10	7	5
7857.364/7040.361	7857.374 x 10	50	100	43	32	25	17	13
7857.364/7040.361	7857.374 x 15	50	150	72	54	42	29	22
7857.364/7040.361 x 2	7857.374 x 20	50	200	105	78	61	42	32
7857.364/7040.361 x 2	7857.374 x 25	50	250	138	104	81	57	43
7857.364/7040.361 x 2	7857.374 x 30	50	300	175	131	103	72	54
Module type				4 x 7040.110 (40 kW)		4 x 7040.120 (80 kW)		
With 4 UPS modules and the following battery configuration Model No. battery rack	Battery Model No. (x = quantity)	Batteries per bank	Total number of batteries	Total system performance				
				32 kW (80%)	40 kW (100%)	48 kW (60%)	64 kW (80%)	80 kW (100%)
7857.590	7857.374 x 4	40	40	9	6	5	3	– [1]
7857.590	7857.374 x 8	40	80	22	16	13	9	– [1]
7857.590	7857.374 x 12	40	120	37	28	22	15	– [1]
7857.590 x 2	7857.374 x 16	40	160	54	41	31	22	– [1]
7857.590 x 2	7857.374 x 20	40	200	72	55	42	29	– [1]
7857.590 x 2	7857.374 x 24	40	240	91	68	53	37	– [1]
7857.364/7040.361	7857.374 x 5	50	50	12	9	7	4	– [1]
7857.364/7040.361	7857.374 x 10	50	100	29	22	17	12	9
7857.364/7040.361	7857.374 x 15	50	150	50	38	29	20	15
7857.364/7040.361 x 2	7857.374 x 20	50	200	72	55	42	29	22
7857.364/7040.361 x 2	7857.374 x 25	50	250	96	73	56	39	30
7857.364/7040.361 x 2	7857.374 x 30	50	300	121	91	71	49	37

[1] Combination not possible.

UPS PMC 120

Catalogue 33, page 375

Overview of autonomy (External batteries of type 12 V/28 Ah)

Common external battery configuration of the UPS PMC 120				Battery autonomy in minutes depending on UPS load				
Module type				5 x 7040.110 (50 kW)		5 x 7040.120 (100 kW)		
With 5 UPS modules and the following battery configuration Model No. battery rack	Battery Model No. (x = quantity)	Batteries per bank	Total number of batteries	Total system performance				
				40 kW (80%)	50 kW (100%)	60 kW (60%)	80 kW (80%)	100 kW (100%)
7857.590	7857.374 x 4	40	40	6	5	4	2	– [1]
7857.590	7857.374 x 8	40	80	16	13	9	6	– [1]
7857.590	7857.374 x 12	40	120	28	21	16	11	– [1]
7857.590 x 2	7857.374 x 16	40	160	41	31	24	16	– [1]
7857.590 x 2	7857.374 x 20	40	200	55	41	32	22	– [1]
7857.590 x 2	7857.374 x 24	40	240	68	51	40	28	– [1]
7857.364/7040.361	7857.374 x 5	50	50	9	6	5	3	– [1]
7857.364/7040.361	7857.374 x 10	50	100	22	16	13	9	7
7857.364/7040.361	7857.374 x 15	50	150	38	28	22	15	12
7857.364/7040.361 x 2	7857.374 x 20	50	200	55	41	32	22	17
7857.364/7040.361 x 2	7857.374 x 25	50	250	73	54	43	29	22
7857.364/7040.361 x 2	7857.374 x 30	50	300	91	68	54	37	28
Module type				6 x 7040.110 (60 kW)		6 x 7040.120 (120 kW)		
With 6 UPS modules and the following battery configuration Model No. battery rack	Battery Model No. (x = quantity)	Batteries per bank	Total number of batteries	Total system performance				
				48 kW (80%)	60 kW (100%)	72 kW (60%)	96 kW (80%)	120 kW (100%)
7857.590	7857.374 x 4	40	40	5	4	3	2	– [1]
7857.590	7857.374 x 8	40	80	13	10	7	5	– [1]
7857.590	7857.374 x 12	40	120	22	16	13	9	– [1]
7857.590 x 2	7857.374 x 16	40	160	32	24	19	13	– [1]
7857.590 x 2	7857.374 x 20	40	200	43	32	25	17	– [1]
7857.590 x 2	7857.374 x 24	40	240	54	41	32	22	– [1]
7857.364/7040.361	7857.374 x 5	50	50	7	5	4	3	– [1]
7857.364/7040.361	7857.374 x 10	50	100	17	13	10	7	5
7857.364/7040.361	7857.374 x 15	50	150	29	22	17	12	9
7857.364/7040.361 x 2	7857.374 x 20	50	200	43	32	25	17	13
7857.364/7040.361 x 2	7857.374 x 25	50	250	57	43	34	23	18
7857.364/7040.361 x 2	7857.374 x 30	50	300	72	54	43	29	22

[1] Combination not possible.

Note:
At half the UPS load, the autonomy (bridging time) is doubled in a linear pattern (in other words, for a capacity utilisation of 30%, 40%, 50%, the autonomies are double those shown in the table for 60%, 80%, 100%).
The autonomies shown are for guidance purposes only, and may deviate from the actual times due to differing battery conditions (such as ageing). Observe the battery ventilation/climate control requirements.
At full load, PMC 40/PMC 120 20 kW modules always require battery banks of 50 (7040.315).

			Battery autonomy in minutes per UPS module				
PMC 120 module type (max. 6 modules)			PMC 40/PMC 120 10 kW module		PMC 40/PMC 120 20 kW module[2]		
Separate external battery per module			8 kW	10 kW	12 kW	16 kW	20 kW
Model No. battery rack	Batteries	Battery bank per module (max. 3 modules)					
7857.396	7857.374 x 4	(1 x 40) x 28 Ah = 40	54	41	32	22	– [1]
7857.396	7857.374 x 8	(2 x 40) x 28 Ah = 80	131	99	78	54	– [1]
7857.398/7040.362	7857.374 x 5	(1 x 50) x 28 Ah = 50	72	54	43	30	22
7857.398/7040.362	7857.374 x 10	(2 x 50) x 28 Ah = 100	175	131	104	72	54

[1] Combination not possible. [2] Module needs at least 50 blocks for full output or at least 2 x 40 blocks for 16 kW.

UPS systems

UPS, Power Modular Concept – PMC 200

Catalogue 33, page 376



N + 1 = Perfect redundancy in a rack with PMC 200

Example 1

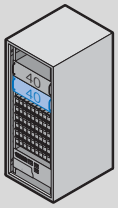

Example 2

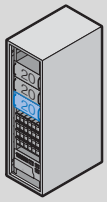

Example 3

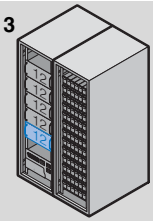

Three examples of a 40 kW UPS with redundancy:
All modules operate in parallel mode. In all cases, one module may fail without impairing the connected load.

Example 1
- 1 + 1 (40 kW + 40 kW)
  Advantage: Just two UPS modules, minimal space requirements. Disadvantage: 100% of the required output must be provided as redundancy.

Example 2
- 2 + 1 (2 x 20 kW + 20 kW)
  Advantage: Compact and energy-efficient.

Example 3
- 4 + 1 (4 x 12 kW + 12 kW), an additional battery rack is needed for batteries.
  Advantage: Only 12 kW needs to be buffered for redundancy.
  Disadvantage: Greater space requirements.

▶ **We will be happy to work with you to project-plan the exact solution best-suited to your individual requirements.**



Extremely small installation space with PMC 2000

Example 1

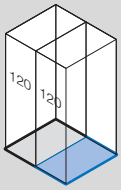

Example 2

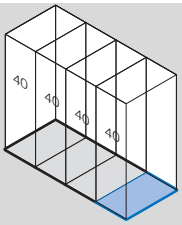

Example 3
PMC 200

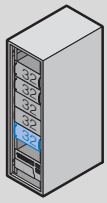

Maximum performance density in one free-standing enclosure!
In examples 1 and 2 we compare the space requirements of two non-modular systems for 120 kW output plus redundancy with the modular UPS system

Rittal PMC 200 (example 3), which is configured according to the 4 + 1 concept with five 32 kW modules.

The minimised construction size of the Rittal PMC 200 concept allows three modules plus battery packs or five modules each with up to 40 kW in one Rittal 482.6 mm (19˝) TS 8 UPS enclosure.

▶ **Benefits thanks to minimal construction size and modular design.**



Maximum energy efficiency with PMC 200

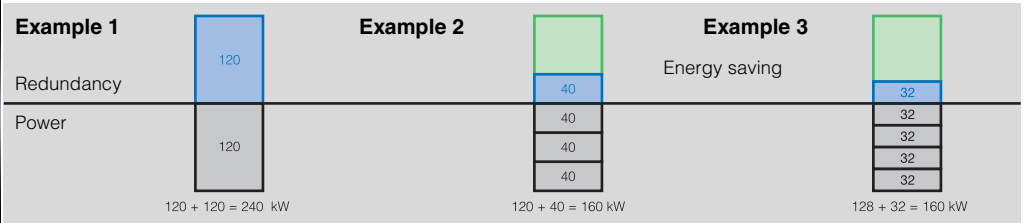

Minimal energy consumption means low costs and minimal pollution:
With the PMC 200 concept, you not only protect the critical load, but also safeguard the operating ratio of the UPS. We will be happy to advise you on the most suitable concept.

Example 1
This 120 kW + 120 kW solution requires the most output for redundancy.

Example 2
This variant with three 40 kW modules only requires $^1/_3$ of the output compared with example 1 for redundancy purposes.

Example 3
With five 32 kW modules only $^1/_4$ is required for the buffer output of redundancy, compared with a single redundant 120 kW UPS. However, there is no space left in the rack for battery packs, i.e. an additional battery enclosure is needed.

▶ **PMC 200 is an excellent solution with regard to energy and space requirements and also with a view to future expansion.**

UPS, Power Modular Concept – PMC 200

Catalogue 33, page 376



Flexible scalability with PMC 200

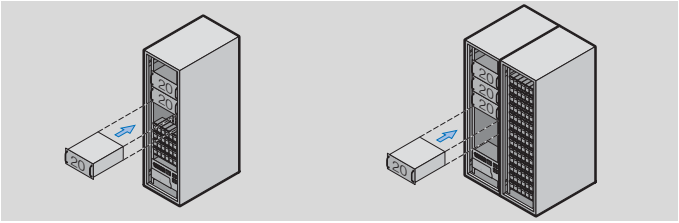

Simple expansion while operational
Output may be expanded from 2 to 3, 4 or 5 UPS modules via “hot swap” with the system operational, without having to switch to bypass mode.

For four modules or more, an additional battery rack will be needed. The autonomy may also be flexibly modified to suit your requirements.

The Rittal PMC 200 modular system combines flexible adaptation to customer-specific requirements with investment reliability and a high level of availability.



Super-fast service with PMC 200

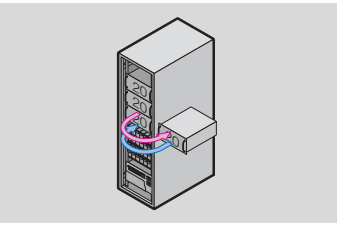

Extremely short MTTR (Mean Time To Repair)
If servicing is required, a 12 kW or 20 kW module may be replaced with a 20 kW module, and a 32 kW or 40 kW module with a 40 kW module. This simplifies the logistics and ensures fast, flexible, cost-effective servicing.

UPS systems

UPS PMC 200

Modular, scalable up to 1000 kW (1250 kVA) Catalogue 33, page 376

Module range (per rack, max. 5 UPS modules of identical output)		**Up to 200 kW**		
Module power	kW	24	32	40
1. Rectifier data				
UPS power module Model No.		7857.230	7857.235	7857.240
Module types		30	40	50
Nominal input voltage	V	3 x 380/220 V+N, 3 x 400/230 V+N, 3 x 415/240 V+N		
Input voltage tolerance	V	3 x 306/177 V to 3 x 464/264 V for < 100% load 3 x 280/161 V to 3 x 464/264 V for < 80% load 3 x 160/138 V to 3 x 464/264 V for < 60% load		
Input frequency	Hz	35 – 70		
Power factor input		PF = 0.99 @ 100% load		
Starting current	A	Limited by soft start/max. I_N		
Distortion factor, THDI		Sine-wave THDI = < 3% @ 100% load		
Input power with charged battery and rated output	kW	25.5	34	42.6
Input with battery charging and rated output	kW	28.1	37.4	46.9
2. Battery specifications (maintenance-free lead and NiCd)				
UPS power module Model No.		7857.230	7857.235	7857.240
Module types		30	40	50
No. of 12 V batteries	No.	40 – 50	40 – 50	40 – 50
Maximum charging current	A	10 A standard		
Battery charging curve		Ripple free; IU (DIN 41 773)		
Temperature-controlled battery charging		Standard (temp. sensor optional)		
Battery test		Automatic and periodic (adjustable)		
Battery type		Maintenance-free lead and NiCd		
3. Output data				
UPS power module Model No.		7857.230	7857.235	7857.240
Module types		30	40	50
Power output per module	kVA	30	40	50
Power output per module	kW	24	32	40
Output current I_N at cos phi 1.0 (400 V)	A	35	46.5	58
Output voltage	V	3 x 380/220 V or 3 x 400/230 V or 3 x 415/240 V		
Output voltage stability		Static: < ± 1% dynamic (step load 0% – 100% or 100% – 0%): < ± 4%		
Output voltage distortion		With linear load: < ± 2% with non-linear load (EN 62 040-3; 2001): < ± 4%		
Output frequency		50 Hz or 60 Hz		
Output frequency tolerance		Synchronous to input, network-led: < ± 2% or: < ± 4% Asynchronous quartz oscillator: ± 0.1%		
Bypass mode		Nominal input voltage at 3 x 400 V or 190 V – 264 V ph-N: ± 15%		
Admissible load unbalance (all 3 phases are controlled independently)	%	100		
Phase angle tolerance (with 100% unbalanced load)	Deg.	± 0		
Overload capacity in inverter mode		125% load: 10 min. 150% load: 60 sec.		
Short-circuit capacity	A	Inverter: 3 x I_N during 40 ms Bypass: 10 x I_N during 10 ms		
Crest factor		3 : 1		
Efficiency AC – AC at 100%/75%/50%/25% load (cos phi 1.0)	%	96/95/95/94		
Eco-mode efficiency at 100% load	%	98		
4. Standards				
Safety		EN 62 040-1-1: 2003, EN 60 950-1: 2006		
EMC		2006, EN 61 000-3-2: 2000, EN 61 000-3-3: 2006, EN 61 000-6-2: 2006, EN 61 000-6-4: 2002		
Classification code VFI-SS-111		EN 62 040-3: 2002		
Product conformity		CE		
Protection category		IP 20		
5. General technical specifications				
Noise level at 100%/50% load	dB (A)	64/55	65/56	65/56
Parallel configuration		Up to 25 modules of the same type/same output!		
Ambient temperature UPS / batteries (recommended)	°C	0 – 40/20 – 25		
Siting		Min. 20 cm spacing from the wall (required for cooling)		
Input and output wiring		From the front, below		
Efficiency AC – AC at 100%/75%/50%/25% load (cos phi 1.0)	%	96/95/95/94		
Eco-mode efficiency at 100% load	%	98		

Note: Up to 5 UPS modules may be integrated into a PMC 200 UPS rack
Possible rack dimensions: WHD: 800 x 2000 x 1000 mm Model No. 7857.580
WHD: 800 x 2000 x 800 mm Model No. 7857.585

UPS PMC 200

Catalogue 33, page 376



UPS rack (Width: 800 mm, Height: 2000 mm, Depth: 800/1000 mm)

Front view

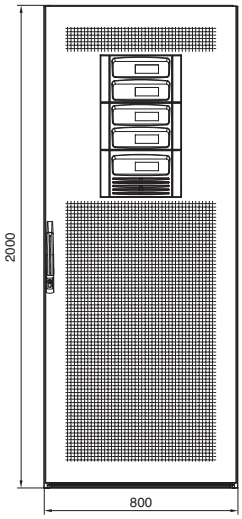

Clearance in front of the UPS rack at least 1000 mm.

Front view without door

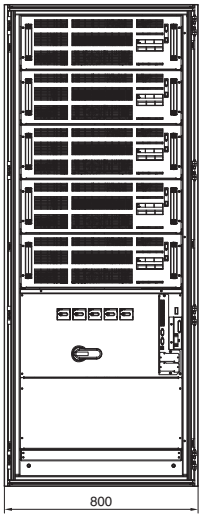

1 to 5 UPS power modules per rack.

Side view without side panel

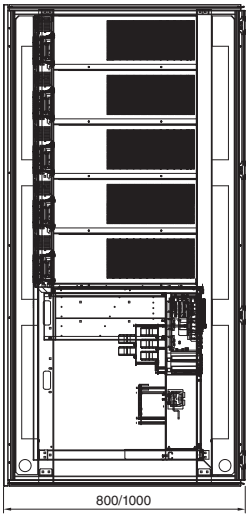

Rear view

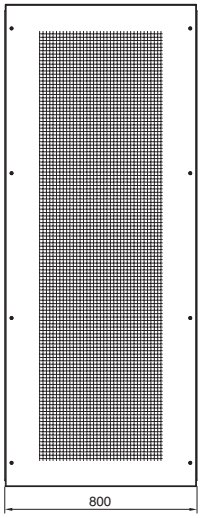

Screw-fastened rear panel, vented, 200 mm distance from wall.

Battery rack (Width: 800 mm, Height: 2000 mm, Depth: 800/1000 mm)

Front view without door

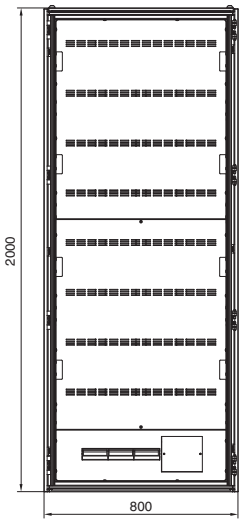

Front view without door (battery distribution of the rack)

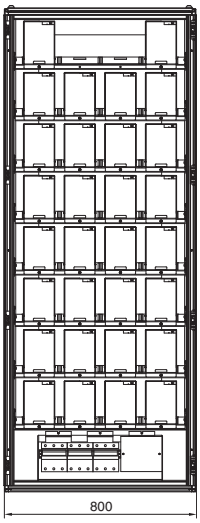

Side view without side panel (5 batteries per drawer each)

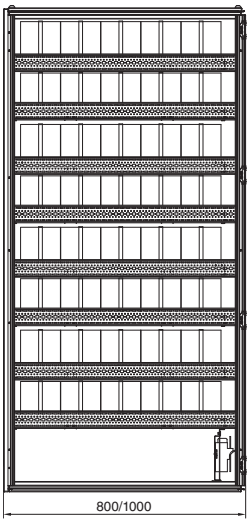

Max. 150 batteries of type 12 V/28 Ah
Caution: Weight of full battery rack is 2000 kg!

Note:
Batteries not included with the supply of the battery rack!

To connect the battery rack to the UPS, the connection cable kit 7857.687 (shared battery per UPS module in the rack) or 7857.688 (separate battery per UPS module in the rack) is required! (Length: 4 m)

For easier connection, we recommend the use of 200 mm base/plinth components.

TS 8602.805 (front and rear) for use in conjunction with:
TS 8602.085 (base/plinth trim, side, 800 mm deep rack),
TS 8602.015 (base/plinth trim, side, 1000 mm deep rack)

PMC 200 commissioning by a Rittal-certified service partner is essential.

Only access from the front is required for installation and maintenance.

Power System Module PSM







PSM rail with measurement for CMC-TC

Busbar with integral output measurement
Catalogue 33, page 384

Display and monitoring of the complete three-phase connection current and the power per rail. The display is local. In conjunction with CMC, the rail may be remotely administered and configured using standard protocols (SNMP, HTTP).

Note:
To connect the PSM measurement bar for CMC-TC (Model No. 7856.016) to the CMC III, the CAN bus unit for two unit channels (Model No. 7030.030) is required. Two PSM measurement bars may be connected per CAN bus unit.

The following active functions are provided:
- Local display, legibility is independent from the installation position.
- Measurement and monitoring of the current per phase. Min./max. limits may be set. Measurement range 0 – 16 A.
- Measuring and monitoring of the voltage per phase. Min./max. limits may be set. Measurement range 0 – 250 V.
- Alarm notification via a flashing display.
- Remote administration of the PSM rail, editing and monitoring of remote limits, SNMP trap message in case of alarm.

1 Simple connection via RJ connector

Note:
When using the CMC III, we recommend using the PSM measurement bars for CMC III, Model Nos. 7859.050 (2 x 3 x 16 A) or 7859.053 (1 x 32 A)!



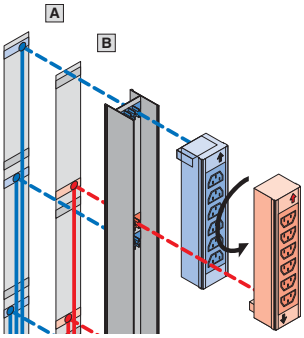

Power System Module PSM

Busbar, current carrying capacity up to 96 A per rack Catalogue 33, page 384

The ever-expanding power requirements of modern IT infrastructures demand refined solutions for power distribution inside the racks. This leads to an associated requirement for additional sockets. The new “intelligent power distribution system” from Rittal significantly reduces cabling and assembly work.

The modular system facilitates basic configuration of the racks, thanks to a vertical support rail with 3-phase infeed. The various insert modules to supply the active components may be snap-fitted into the support rail. This can even be done whilst the system is operational, because the support section is shock-hazard protected.

The various modules, earthing pins, IEC 320 etc. may be inserted into the support rail in any combination. This is easily achieved, even by non-electricians, thanks to the shock hazard protected plug & play system.

Technical specifications/benefits:
- 3-phase construction with a maximum current of 3 x 16 A.
- A redundant three-phase infeed with 3 x 16 A may also be added.
- The redundant circuit is completely separate from the 3 phases of the support rail.
- Each plug-in module picks off a phase on the support rail, either from infeed **A** or from the redundant infeed **B,** depending on the direction of connection.
- Modules may be retrofitted whilst the system is operational.
- Plug-in modules may be equipped with integral overcurrent protection, so that only the affected module is deactivated in the event of an excessively high current. The other modules remain operational.
- Overvoltage protection may be integrated into the supply line.

The vertical support rail allows the slots to be used flexibly across the entire enclosure height, and configured in a redundant manner via separate power infeed to the individual modules.

Supply includes:
– Busbar with connection socket
– Assembly parts
– Instructions
Without cable.

VDE **Reg No. A592**





PSM busbar

Single- and 3-phase design with 32 A phase current Catalogue 33, page 384

Technical specifications:
- Single- and three-phase design with a max. current of 32 A per phase, 1 x 32 A or 3 x 32 A, 400/230 V, 50/60 Hz
- Accommodates up to 6 passive PSM modules
- Integral circuit-breaker 16 A, Class C
- Modules may be retrofitted whilst the system is operational

Supply includes:
- Busbar with CEE-conforming connector
- Assembly parts
- Instructions



PSM busbar

With fixed infeed/RCD
Catalogue 33, page 384

Busbar with Residual Current protective Device (RCD). The busbar is protected against inadmissibly high touch voltages by two RCDs with a rated differential current of 30 mA. One RCD protects 3 slots on the bar. Additionally, there are two 16 A miniature circuit-breakers integrated into the bar. Infeed is via a 32 A CE connector.

Supply includes:
- Busbar with fixed connection cable (3 m)
- Instructions
- Assembly parts

Power System Module PSM



Socket modules with switchable slots

Catalogue 33, page 385

The module has 8 current outlets with IEC320 C13 (depending on version C19/earthing-pin) slots. Each of the 8 slots is individually switchable (via the CMC system). Furthermore, a current indicator, circuit display and thermal overload protection are integrated into the module. The module is twice the length of a standard PSM module, so that a maximum of 2 modules may be inserted into a 1200 mm long PSM rail, and a maximum of 3 modules into a 2000 mm long PSM rail.

Operate the module without CMC:
For operation of the module, power pack DK 7201.210 and a connection cable are needed. Up to 2/3 modules may be operated in one PSM rail (1200/2000 mm) with one power pack.

Available functions: Current display, circuit display and automatic selective activation

Operate the module with CMC:
A module is connected to the CMC III via a CAN bus unit for two channels 7030.030. The module is supplied with power via this unit; a separate power pack is not required. Up to 4 x 2 x 4 modules may be connected to one CMC III processing unit.

Available functions: Current display, circuit display, automatic selective activation, via CMC in the network: Individual switching of the 8 current outlets, current limit monitoring, delayed switching of the individual current outlets, status display of the module.

Recommended accessory list CMC:
- DK 7030.000/7030.010 CMC III Processing Unit or CMC III Processing Unit Compact
- 7030.030 CAN bus unit for two channels
- 7030.060 CMC III power pack, 100 – 230 V AC
- 7030.070 CMC III mounting unit, 1 U
- 7030.091 CAN-Bus connection cable RJ 45, 2 m
- 7200.210 connection cable/extension (depending on country variant)
- 7030.080 CMC III programming cable USB

Design	**Model No. DK**
8-way C13	**7856.201**
8-way C13, 482.6 mm (19˝) mounting	**7200.001**
2 x C13 and 4 x earthing-pin	**7856.203**
2 x C13 and 4 x C19	**7856.204**

Description of functions:
- 2-digit local LED 7-segment current display on the module. Legibility is independent from the installation position.
- Measuring and monitoring of the current per module. Min./max. limits may be set. Measurement range 0 – 16 A.
- Alarm messages are indicated via a flashing 7-segment display.
- Monitoring of the thermo-fuse.
- Modules may be combined via the bus system, to enable selective activation.
- In conjunction with the CMC, the 8 individual current outlets of the modules may be activated and deactivated individually via HTTP and SNMP.
- Remote administration of the power supply, editing and monitoring of remote limits, SNMP trap messages in case of alarm.
- 8 IEC320 C13 sockets per module.
- User administration.

Material:
Aluminium section with plastic cover

Supply includes:
– 1 module (max. 16 A per module)
– 1 infeed cable 24 V DC or 1 bus cable
– 1 adaptor for power pack 24 V DC

Also required:

A separate power pack (100 – 240 V AC/24 V DC) is required for stand-alone operation without CMC (DK 7201.210) and the relevant connection cables.


Photo shows a configuration example with equipment not included in the scope of supply.

PSM/PCU modules

Individual current measurement per slot
Catalogue 33, page 385

Features of the active PSM/PCU modules in conjunction with the CMC

- 2-digit local LED 7-segment current display for total current values.
- Individual current measurement per slot with limit configuration via CMC web interface.
- LED colour code for load assessment per module/slot.
- SNMP switching option via the network.
- Up to 16 modules via a joint web interface under one IP address.
- Monitoring of the current per module and outgoing slot.
- Limits may be freely configured.
- The 8 individual slots of the module may be switched separately in conjunction with the CMC. May also be linked to other CMC alarm messages.
- Alarm messages are additionally indicated by flashing LEDs.

PSM plug-in module/19˝ PCU
Modules for the Rittal PSM busbar system or for mounting on either the 482.6 mm (19˝) level or enclosure frame. In conjunction with Rittal CMC, the managed modules offer further convenient functions. These include event-controlled switching of the outputs and current measurements for individual sockets.
The switchable modules also feature sequential reconnection after a power failure. Versions are available for all the important connector types used in the data centre.

Note:
– A PSM busbar (e.g. 7856.020) is required to be able to use the PSM modules. Corresponding information can be found in Catalogue 33, from page 384.
– A CMC system is required for control and remote monitoring of the managed modules via TCP/IP. The CMC Processing Unit permits the administration of up to 16 modules. Corresponding information can be found in Catalogue 33, from page 768.

All relevant information is also to be found on the Internet at: **www.rittal.com**

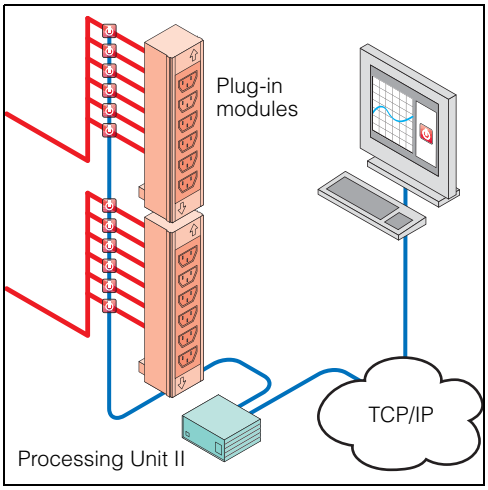



Ingeniously simple: Optical load indicators
An immediate overview of phase loads at all times. No more worries about unnoticed overloading or unbalanced power distribution in the rack.

Fan systems

TopTherm fan-and-filter units

Air throughput (unimpeded air flow) 20 – 66 m³/h Catalogue 33, page 394

Air throughput (unimpeded air flow) 105 – 250 m³/h Catalogue 33, page 395/396

Air throughput (unimpeded air flow) 550 – 770 m³/h Catalogue 33, page 397

Air throughput (unimpeded air flow) 900 m³/h Catalogue 33, page 398

Model No. SK	Dimensions mounting cut-out mm	
	B2	H2
3237.100	92	92
3237.600		
3237.110		
3237.124		
3238.100	124	124
3238.600		
3238.110		
3238.124		
3239.100	177	177
3239.600		
3239.110		
3239.124		
3240.100	224	224
3240.600		
3240.110		
3240.124		
3241.100		
3241.600		
3241.110		
3241.124		
3243.100	292	292
3243.600		
3243.110		
3244.100		
3244.600		
3244.110		
3244.140		
3245.500	292	292
3245.600		
3245.510		

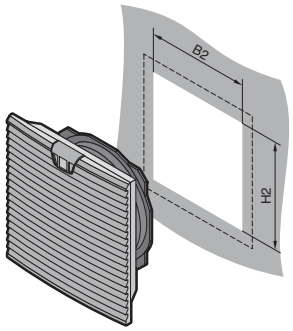

B = Width

Rack-mounted fan

for 482.6 mm (19˝), air throughput (unimpeded air flow) 320/480 m³/h Catalogue 33, page 399/400

Rack-mounted fan
mounted between a pair of
482.6 mm (19˝) mounting angles

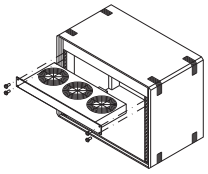

Vario rack-mounted fan
mounted in subracks 84 HP

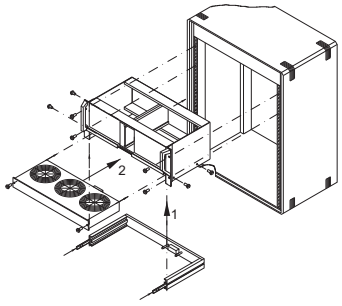

Vario rack-mounted fan
mounted between a pair of
482.6 mm (19˝) mounting angles

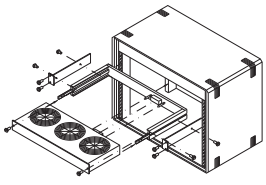

Tangential fans

Air throughput (unimpeded air flow) 320/480 m³/h Catalogue 33, page 400

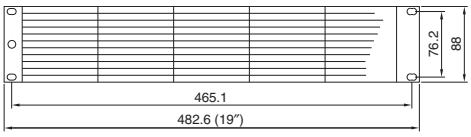

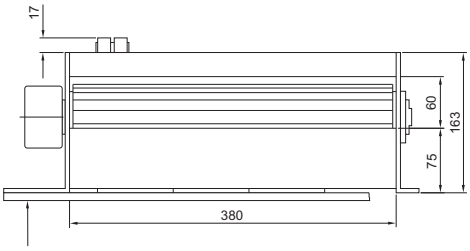

Front grille

RTT roof-mounted fan and vent attachment

Air throughput (unimpeded air flow) 400/800 m³/h Catalogue 33, page 401

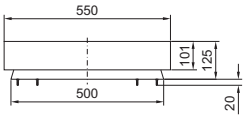

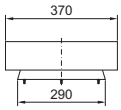

Mounting cut-out

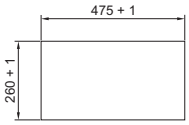

Roof-mounted fans

Air throughput 360 m³/h Catalogue 33, page 402

Without fan With fan

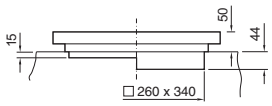

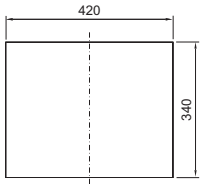

Mounting cut-out

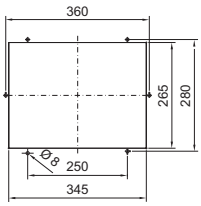

For TS in the office sector, air throughput 1500 m³/h Catalogue 33, page 402

Mounting cut-out
only required for fans without roof plate

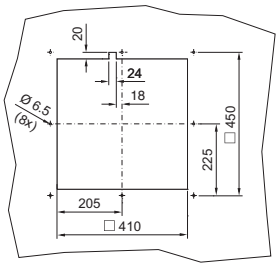

Fan systems

Enclosure internal fan

Air throughput (unimpeded air flow) 160 m³/h Catalogue 33, page 403

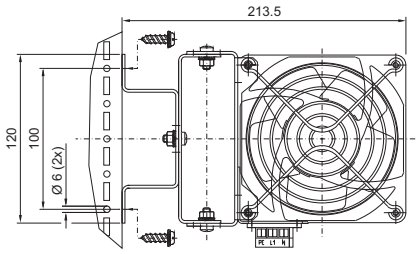

Door-mounted fan

Air throughput (unimpeded air flow) 600 m³/h Catalogue 33, page 407

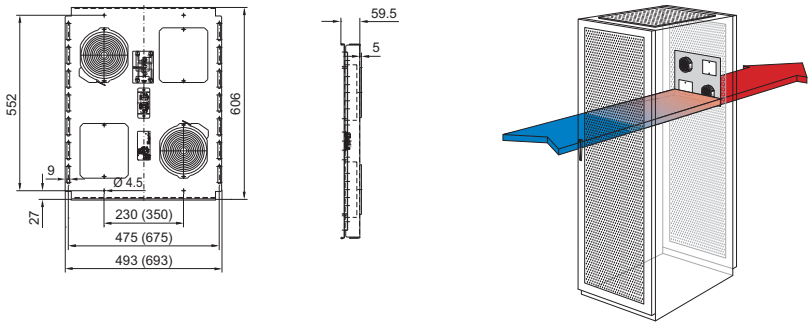

Air/air heat exchangers

Wall-mounted Catalogue 33, page 408

SK 3125.800

Rear

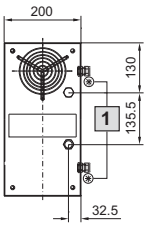

Side view

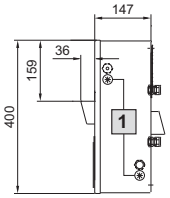

Mounting cut-out for external and internal mounting

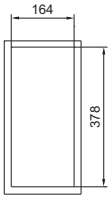

SK 3129.800

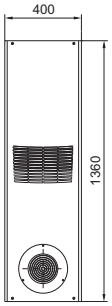

External mounting



Mounting cut-out for external mounting

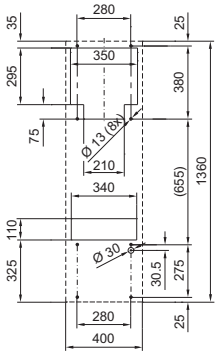

1 Optional cable gland

External mounting

Internal mounting

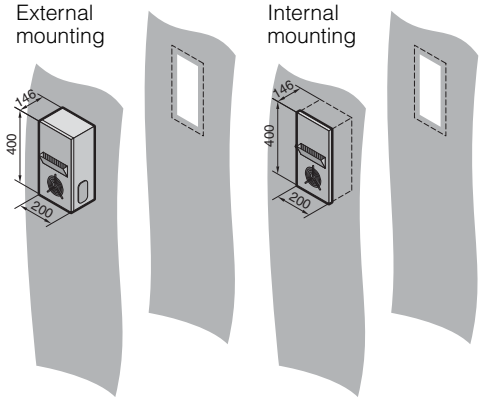

External mounting

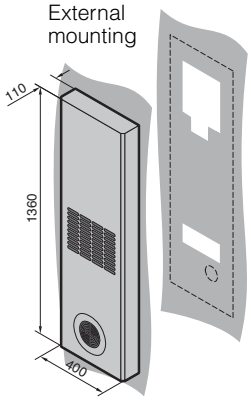

Air/air heat exchangers

TopTherm air/air heat exchangers

Wall-mounted with controller, specific thermal output 17.5 W/K Catalogue 33, page 409

SK 3126.XXX

External mounting

Internal mounting

Mounting cut-out for external mounting

Mounting cut-out for internal mounting

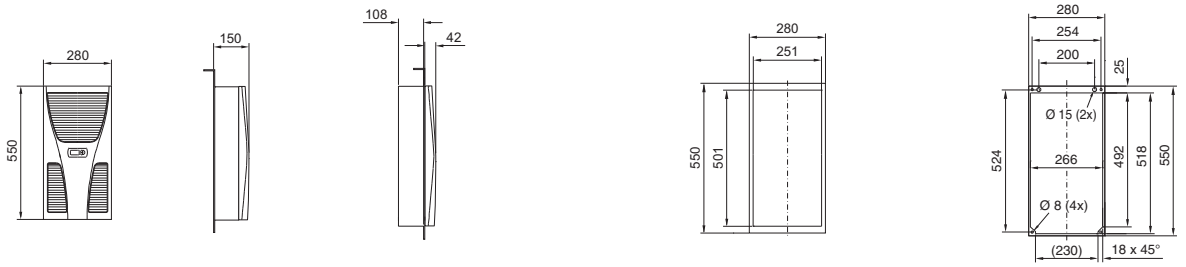

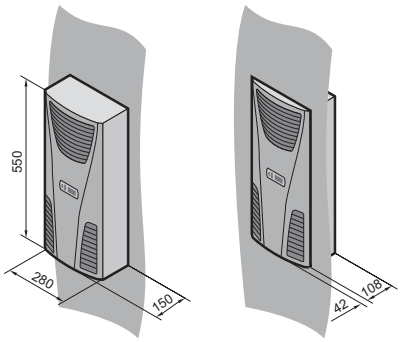

Wall-mounted with controller, specific thermal output 30 – 60 W/K Catalogue 33, page 409

SK 3127.XXX,
SK 3128.XXX,
SK 3129.XXX

External mounting

Internal mounting

Mounting cut-out for external mounting

Mounting cut-out for internal mounting

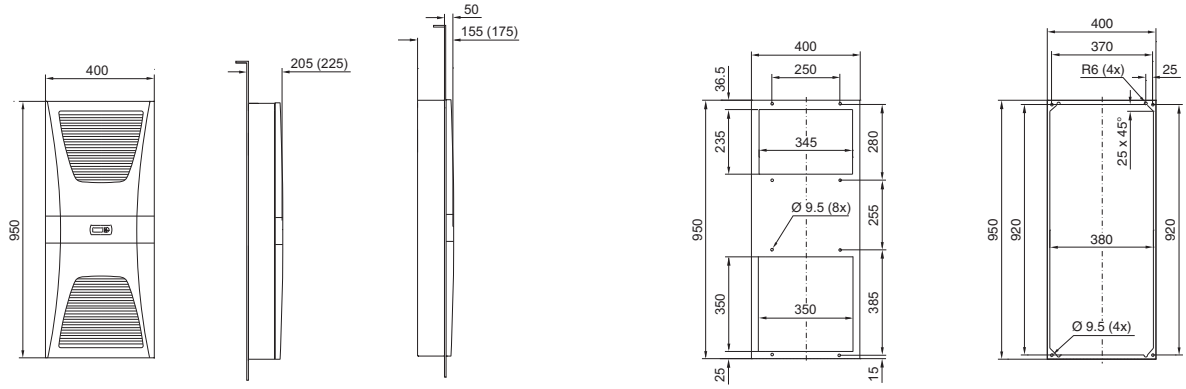

Dimensions in brackets for 45 W/K and 60 W/K

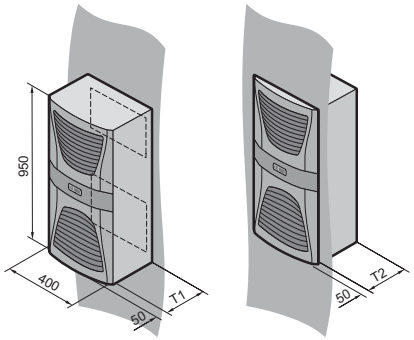

Model No. SK	T1	T2
SK 3127.XXX SK 3128.XXX	205	155
SK 3129.XXX	225	175

T = Depth

Air/air heat exchangers

Wall-mounted with controller, specific thermal output 90 W/K Catalogue 33, page 409

SK 3130.XXX

External mounting

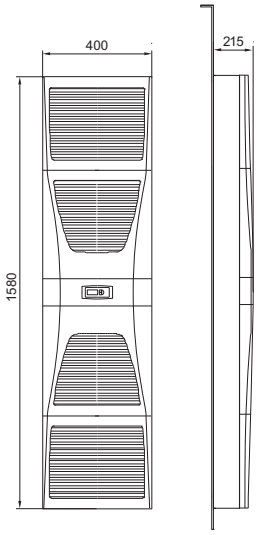

Internal mounting

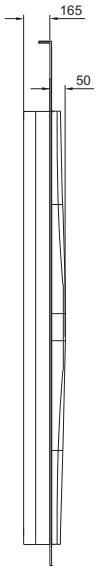

Mounting cut-out for external mounting

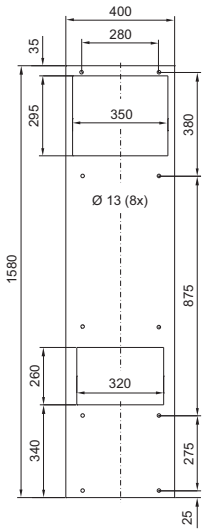

Mounting cut-out for internal mounting

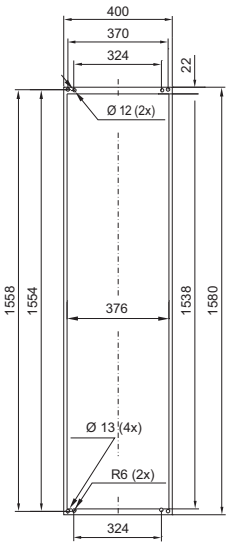

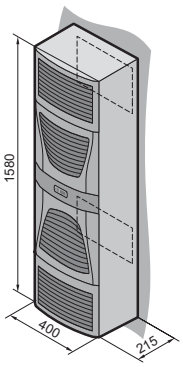

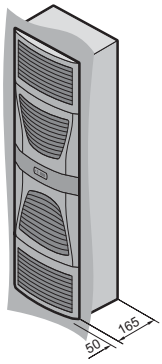

Air/air heat exchangers

Wall-mounted, railway-compatible version, specific thermal output 27 – 98 W/K Catalogue 33, page 410

Mounting cut-out SK 3126.4XX

External mounting

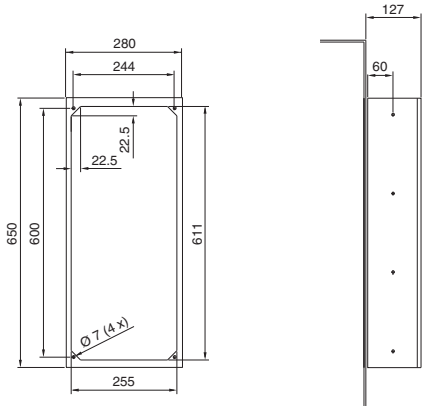

Installation with adjustable frame

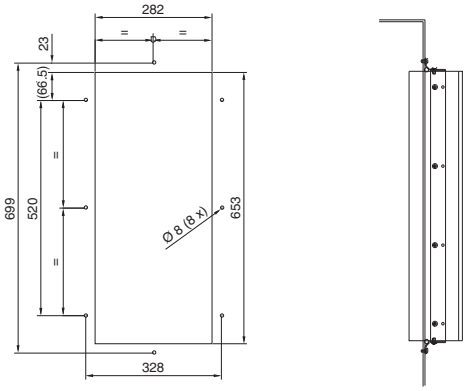

Internal mounting

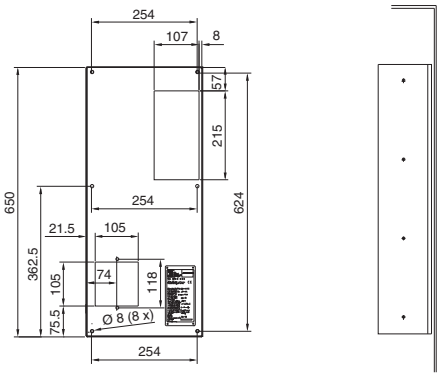

Adjustment options

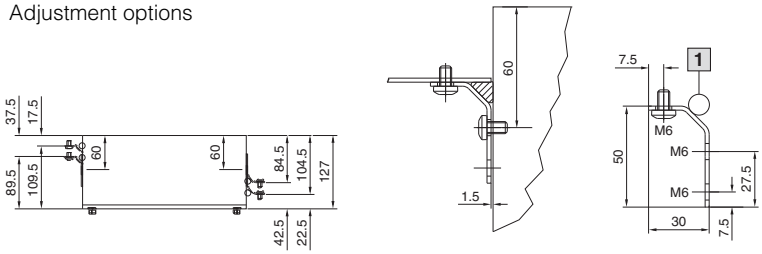

1 Microcellular rubber seal EPDM, black 12 mm, as solid all-round rubber seal

Mounting cut-out SK 3128.4XX

External mounting

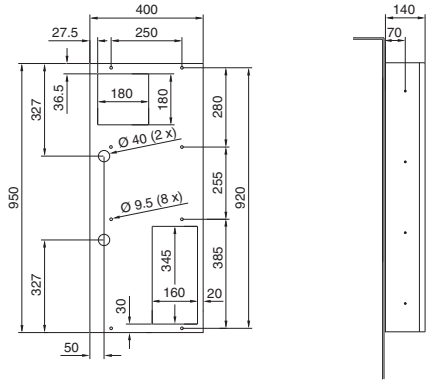

Installation with adjustable frame

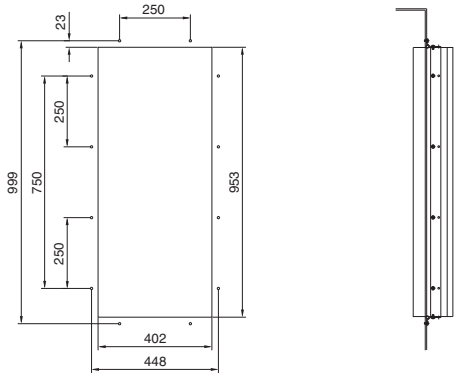

Internal mounting

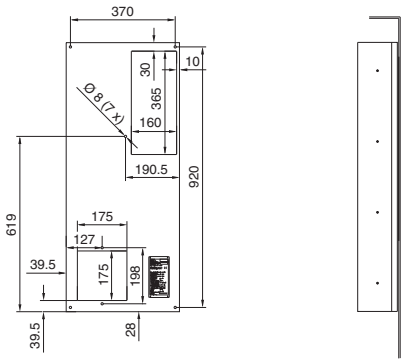

Adjustment options

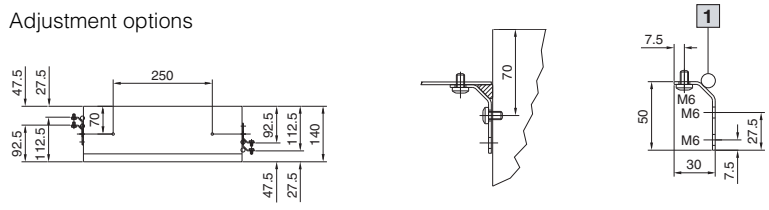

1 Microcellular rubber seal EPDM, black 12 mm, as solid all-round rubber seal

Air/air heat exchangers

Wall-mounted, railway-compatible version, specific thermal output 27 – 98 W/K Catalogue 33, page 410

Mounting cut-out SK 3129.4XX

External mounting

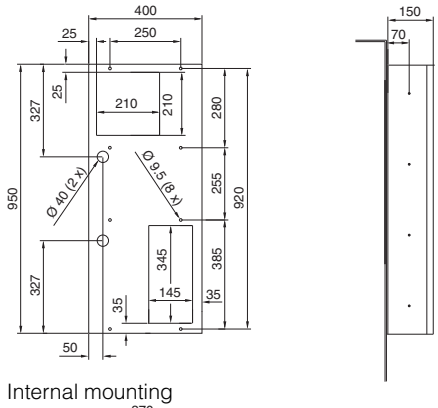

Internal mounting

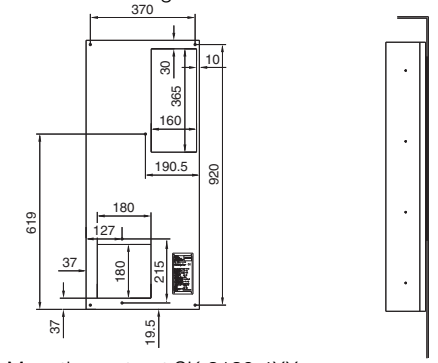

Installation with adjustable frame

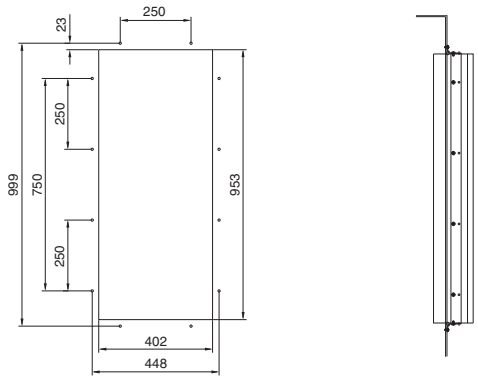

Adjustment options

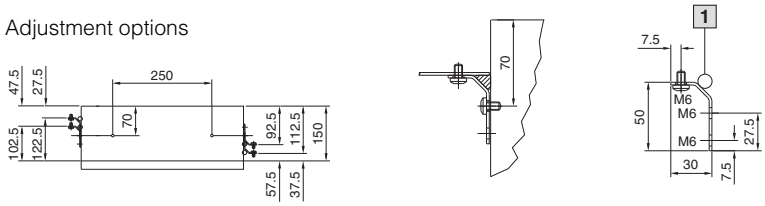

1 Microcellular rubber seal EPDM, black 12 mm, as solid all-round rubber seal

Mounting cut-out SK 3130.4XX

External mounting

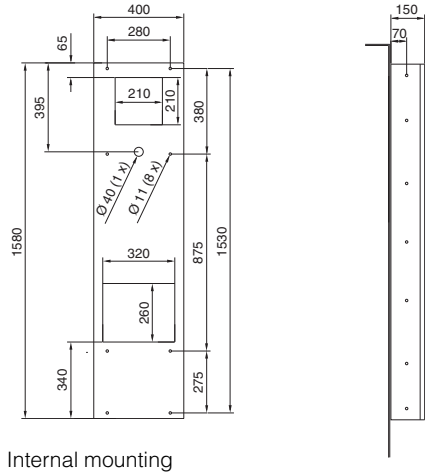

Internal mounting

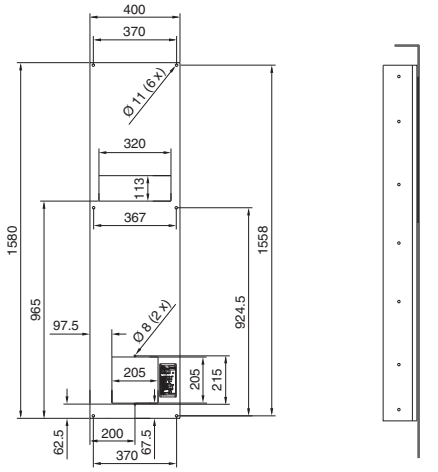

Installation with adjustable frame

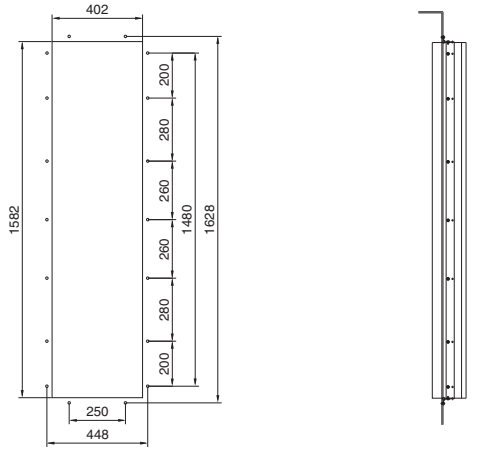

Adjustment options

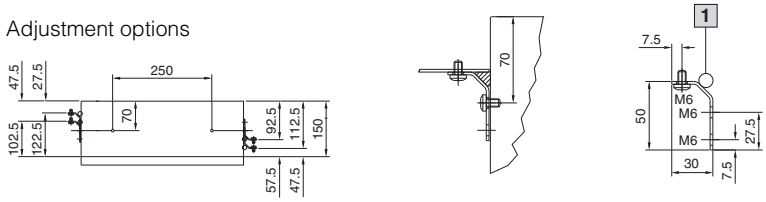

1 Microcellular rubber seal EPDM, black 12 mm, as solid all-round rubber seal

Air/air heat exchangers

Air/air heat exchangers

Wall-mounted, railway-compatible version, specific thermal output 27 – 98 W/K Catalogue 33, page 410

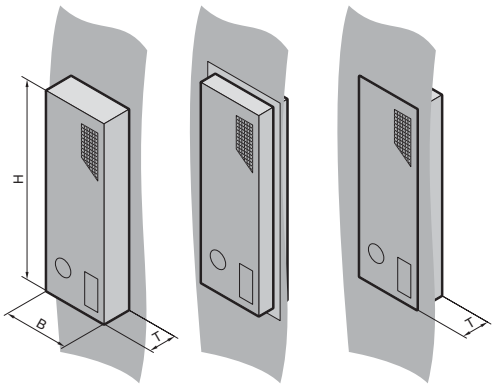

External mounting | Partial internal mounting[1)] | Internal mounting

Model No. SK	W (B) mm	H mm	D (T) mm
3126.424 3126.410	280	650	127
3128.424 3128.410	400	950	140
3129.424 3129.410	400	950	150
3130.424 3130.410	400	1580	150

[1)] Installation only supported with an adjustable frame (see Catalogue 33, page 479).

Roof-mounted Catalogue 33, page 411

Application:
These units are used specifically if the doors or side panels must not be obstructed, or space must be kept clear for escape routes.

Technical design:
- The heat exchanger module and the enclosure of the heat exchanger form a single unit, thereby substantially enlarging the surface area for heat dissipation.
- This design gives the unit an extremely low weight (16.8 kg) combined with a high degree of enclosure rigidity.
- The built-in radial fans ensure effective air circulation, even where the enclosure is densely packed.
- All motors are equipped with thermal winding protection.
- As you would expect, the heat exchanger membranes are conductively connected to one another and thereby incorporated into the electrical safety features.
- The internal and external circuits can be connected separately; separate routing effectively prevents the ingress of dust, moisture and dirt.

SK 3248.000

Rear

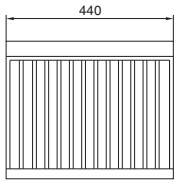

Side view

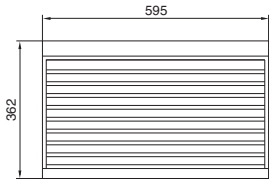

Mounting cut-out for external and internal mounting

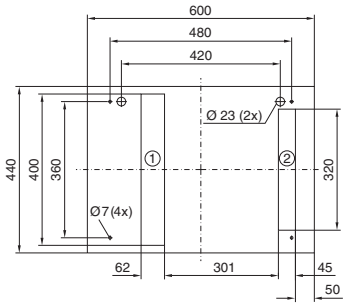

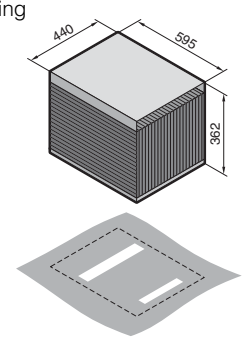

Thermoelectric coolers

Catalogue 33, page 414

External mounting

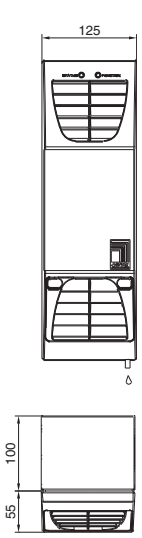

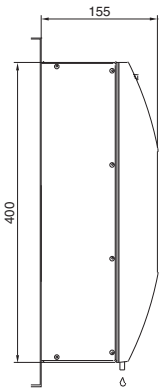

Internal mounting

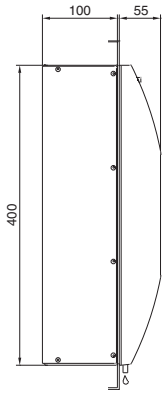

Mounting cut-out for external mounting

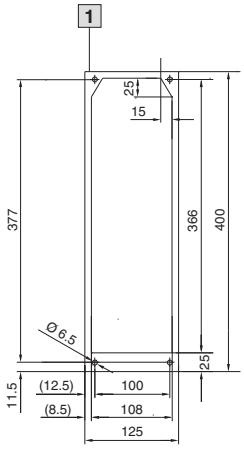

Mounting cut-out for internal mounting

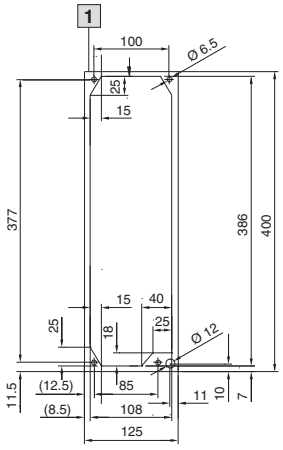

1 Outer contour of climate control unit

Wall-mounted cooling units

TopTherm, horizontal format, useful cooling output 300 W Catalogue 33, page 415

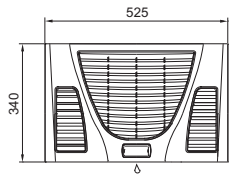

External mounting

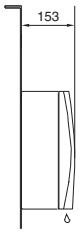

Internal mounting

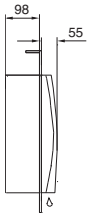

Mounting cut-out for external mounting

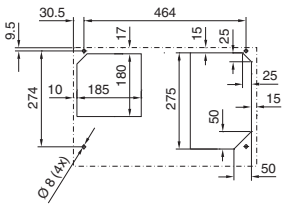

Mounting cut-out for internal mounting

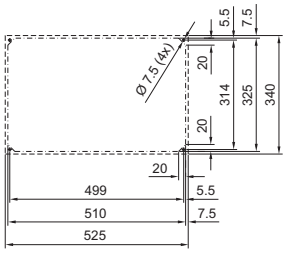

TopTherm, useful cooling output 300 W Catalogue 33, page 416

External mounting

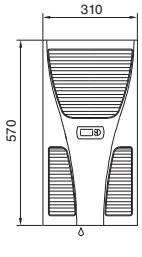



Internal mounting

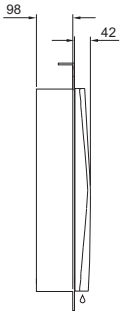

Mounting cut-out for external mounting

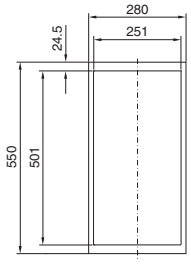

Mounting cut-out for internal mounting

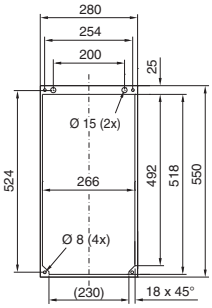

Cooling units

Wall-mounted cooling units

TopTherm "Blue e", useful cooling output 500 W Catalogue 33, page 417

TopTherm "Blue e", useful cooling output 750 W Catalogue 33, page 418

External mounting

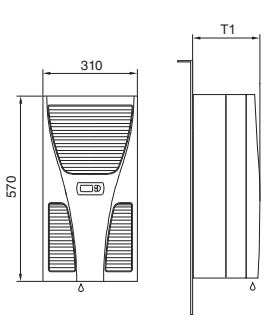

Partial internal mounting

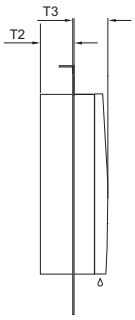

Internal mounting

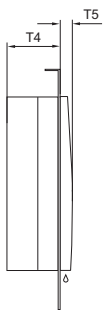

Mounting cut-out for external mounting

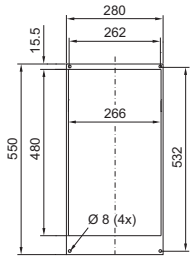

Mounting cut-out for partial internal mounting

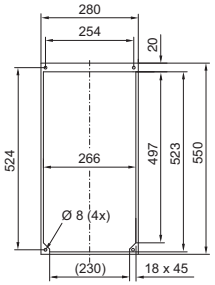

Mounting cut-out for internal mounting

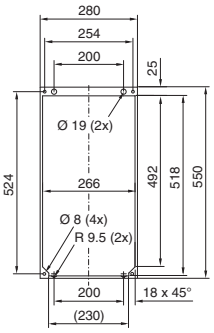

	T1	T2	T3	T4	T5
500 W	210	100	110	164	42
750 W	280	125	155	235	45

T = Depth

TopTherm "Blue e", useful cooling output 1000/1500 W Catalogue 33, page 419/420

External mounting

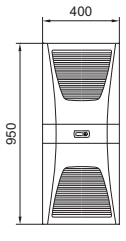



Partial internal mounting



Internal mounting

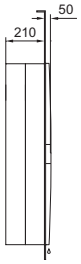

Mounting cut-out for external mounting

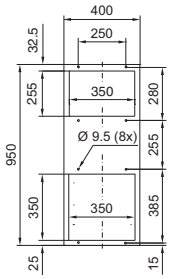

Mounting cut-out for partial internal mounting

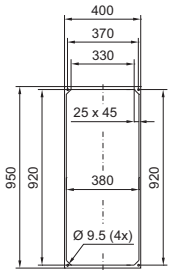

Mounting cut-out for internal mounting

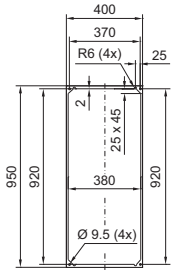

TopTherm "Blue e", useful cooling output 2000/2500 W Catalogue 33, page 421/422

External mounting

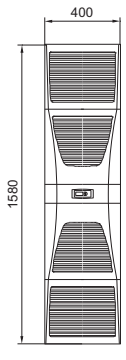

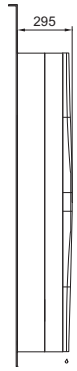

Partial internal mounting



Internal mounting[1)]



Mounting cut-out for external mounting

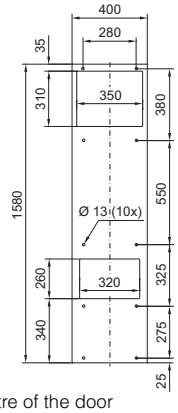

Mounting cut-out for partial internal mounting, internal mounting

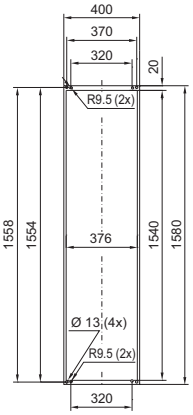

[1)] For installation in 600 mm wide doors, move the mounting cut-out from the centre of the door to the hinged side by at least 10 mm.

Wall-mounted cooling units

TopTherm "Blue e", useful cooling output 4000 W Catalogue 33, page 422

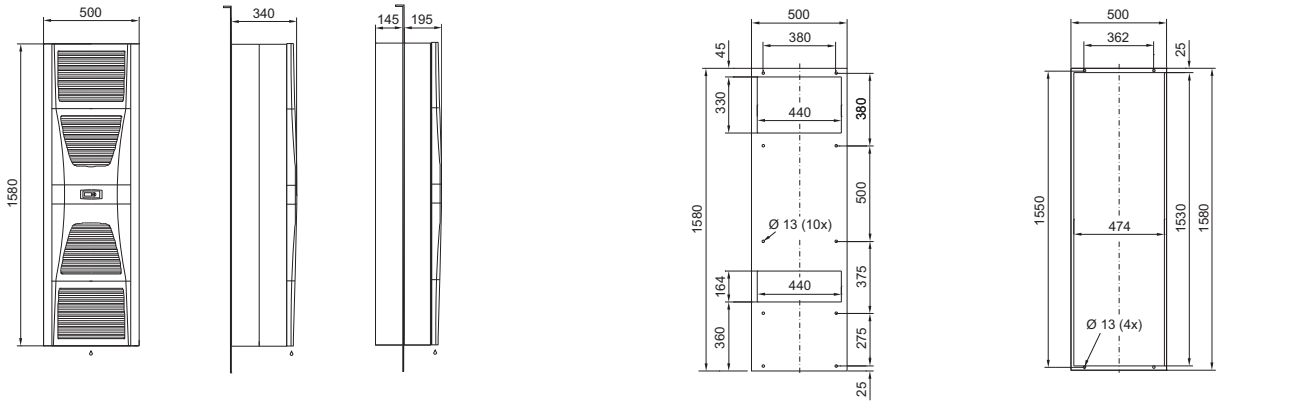

TopTherm "Blue e", slimline, useful cooling output 1500 W Catalogue 33, page 423
(SK 3366.XXX)

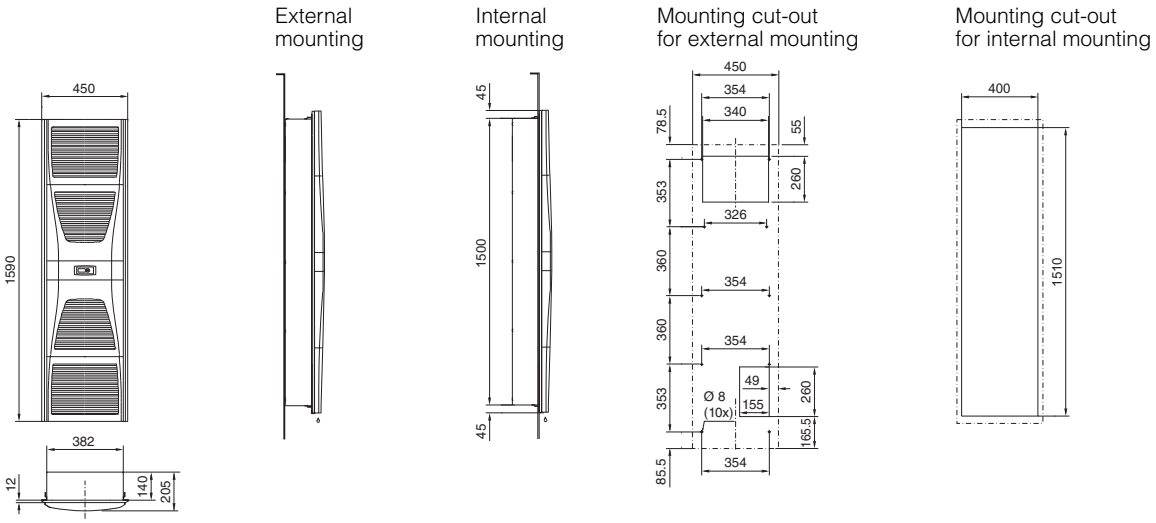

TopTherm "Blue e", design NEMA 4X, useful cooling output 500 W Catalogue 33, page 424

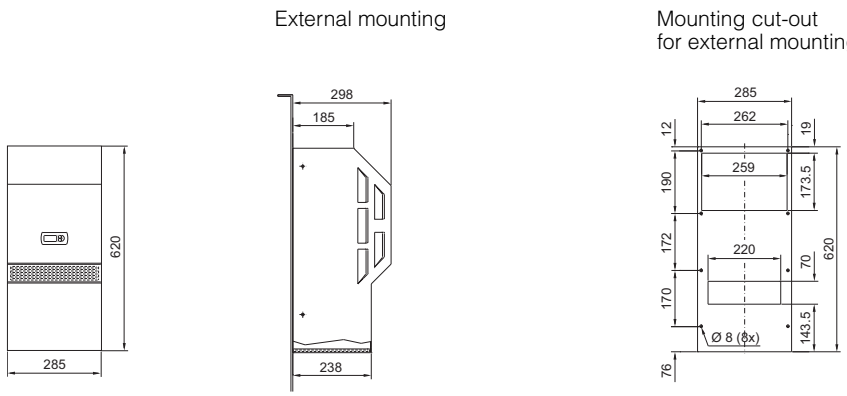

Cooling units

Wall-mounted cooling units

TopTherm “Blue e”, design NEMA 4X, useful cooling output 1000/1500 W Catalogue 33, page 424

External mounting

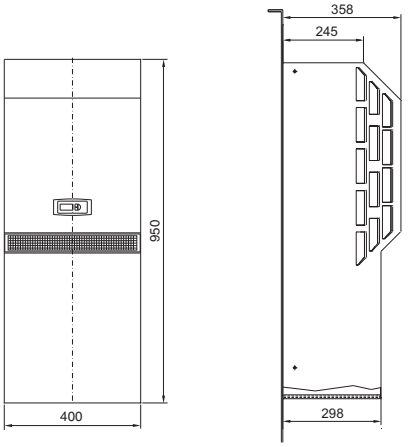

Mounting cut-out
for external mounting

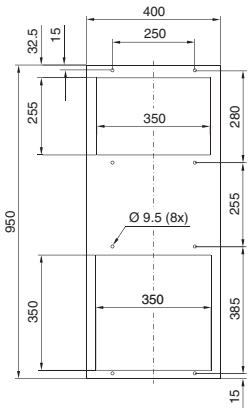

Mounting cut-out
for partial internal mounting,
for internal mounting

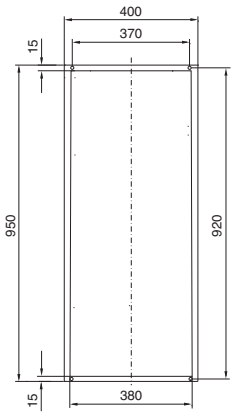

TopTherm “Blue e”, design NEMA 4X, useful cooling output 2000/2500 W Catalogue 33, page 425

External mounting

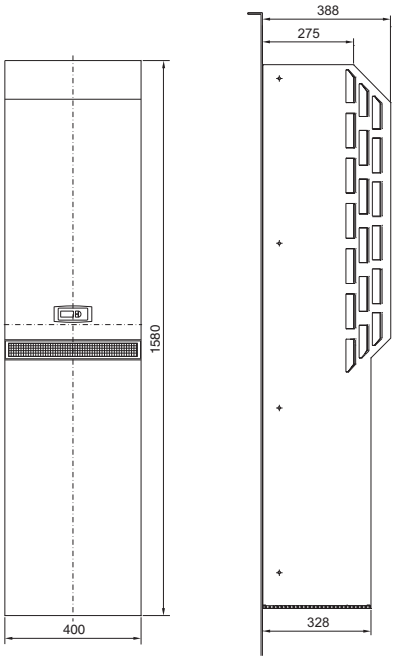

Mounting cut-out
for external mounting

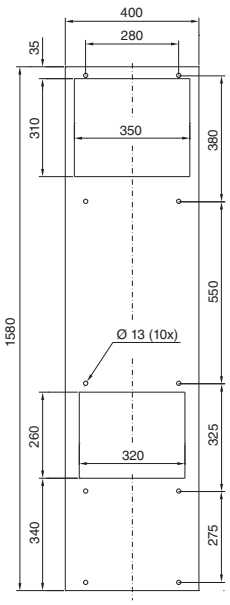

Montageausschnitt
for partial internal mounting,
for internal mounting

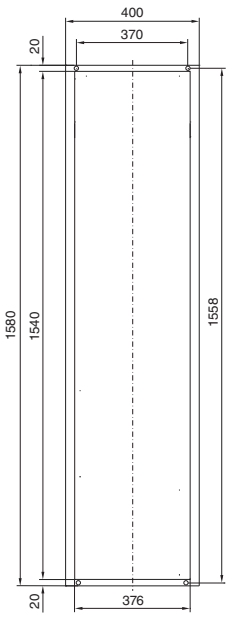

Roof-mounted cooling units

TopTherm “Blue e”, useful cooling output 500/750 W Catalogue 33, page 426/427

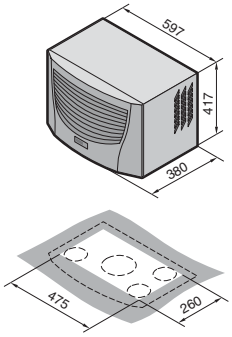

Mounting cut-out

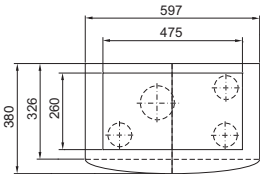

1 Condensate discharge 1/2″, flexible

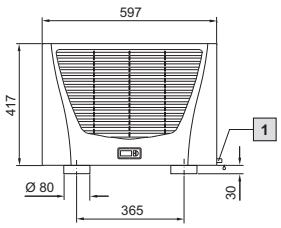

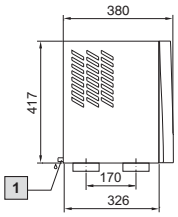

TopTherm “Blue e”, useful cooling output 1000 W Catalogue 33, page 427

TopTherm “Blue e”, useful cooling output 1100 W Catalogue 33, page 428

TopTherm “Blue e”, useful cooling output 1500/2000 W Catalogue 33, page 428/429

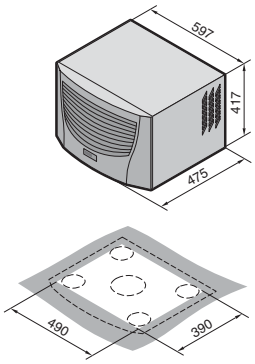

Mounting cut-out

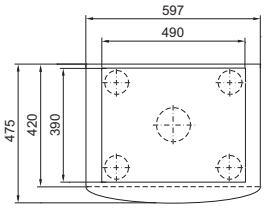

1 Condensate discharge 1/2″, flexible

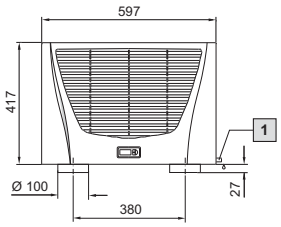

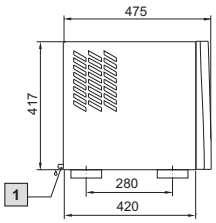

TopTherm “Blue e”, useful cooling output 3000 W Catalogue 33, page 429

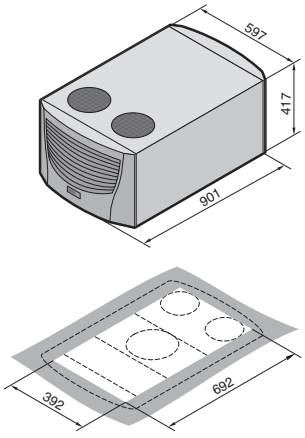

Mounting cut-out

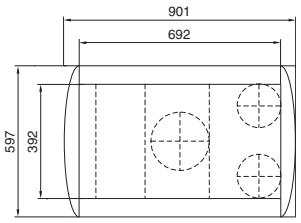

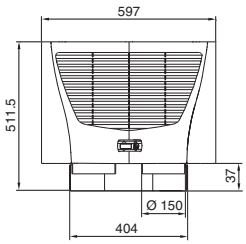

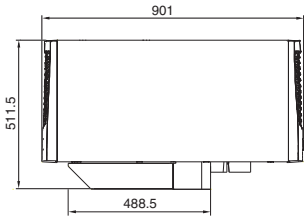

Cooling units

Roof-mounted cooling units

TopTherm "Blue e", useful cooling output 3000/4000 W Catalogue 33, page 429

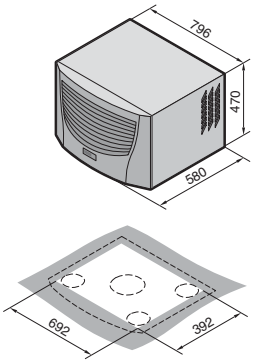

Mounting cut-out

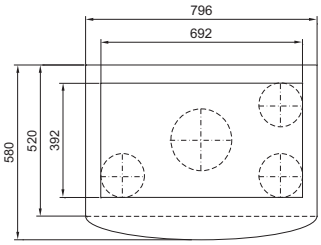

1 Condensate discharge 1/2″, flexible

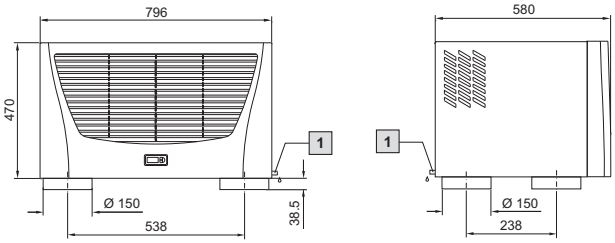

Cooling modules "Blue e"

Useful cooling output 1500/2500 W Catalogue 33, page 430

Technical specifications:
- Permissible operating pressure p. max.: 28 bar
- Duty cycle: 100%
- Type of connection: Plug-in terminal strip

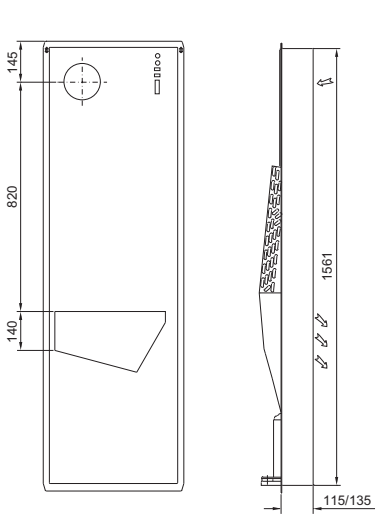

1500 W

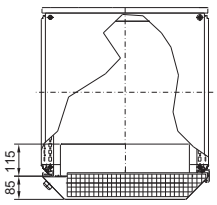

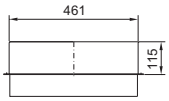

2500 W

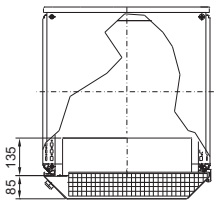

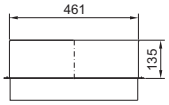

Section doors

Catalogue 33, page 431

For enclosures

600 mm wide

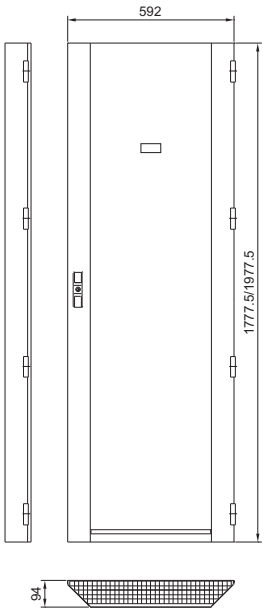

800 mm wide

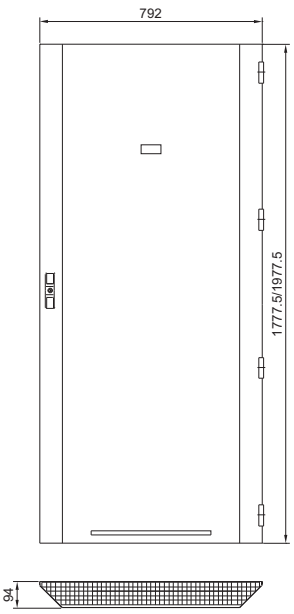

For enclosures 1200 mm

Device position

Left

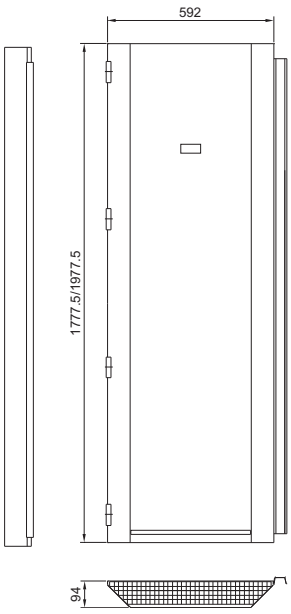

Right

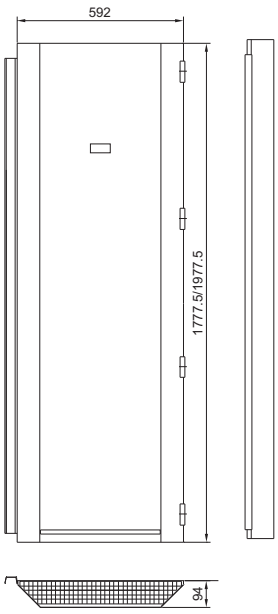

Air/water heat exchangers

Air/water heat exchangers

Roof-mounted, SK 3209.XXX, SK 3210.XXX Catalogue 33, page 434 – 436

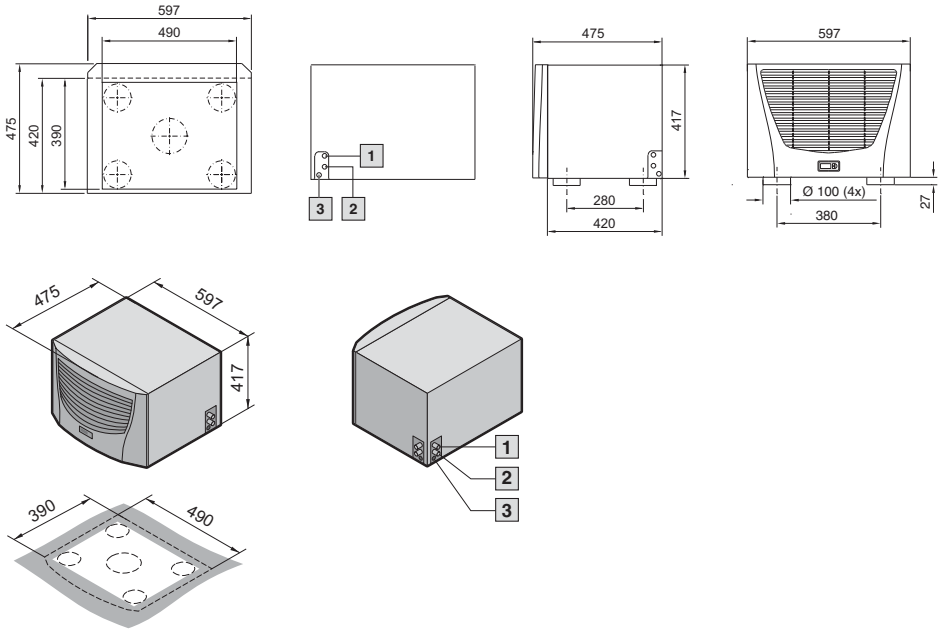

1 Cooling water inlet 1/2″ (12 mm)
2 Cooling water return 1/2″ (12 mm)
3 Condensate discharge 1/2″ (12 mm)

Wall-mounted, SK 3212.XXX Catalogue 33, page 437

Mounting holes for internal mounting

Mounting cut-out for external mounting

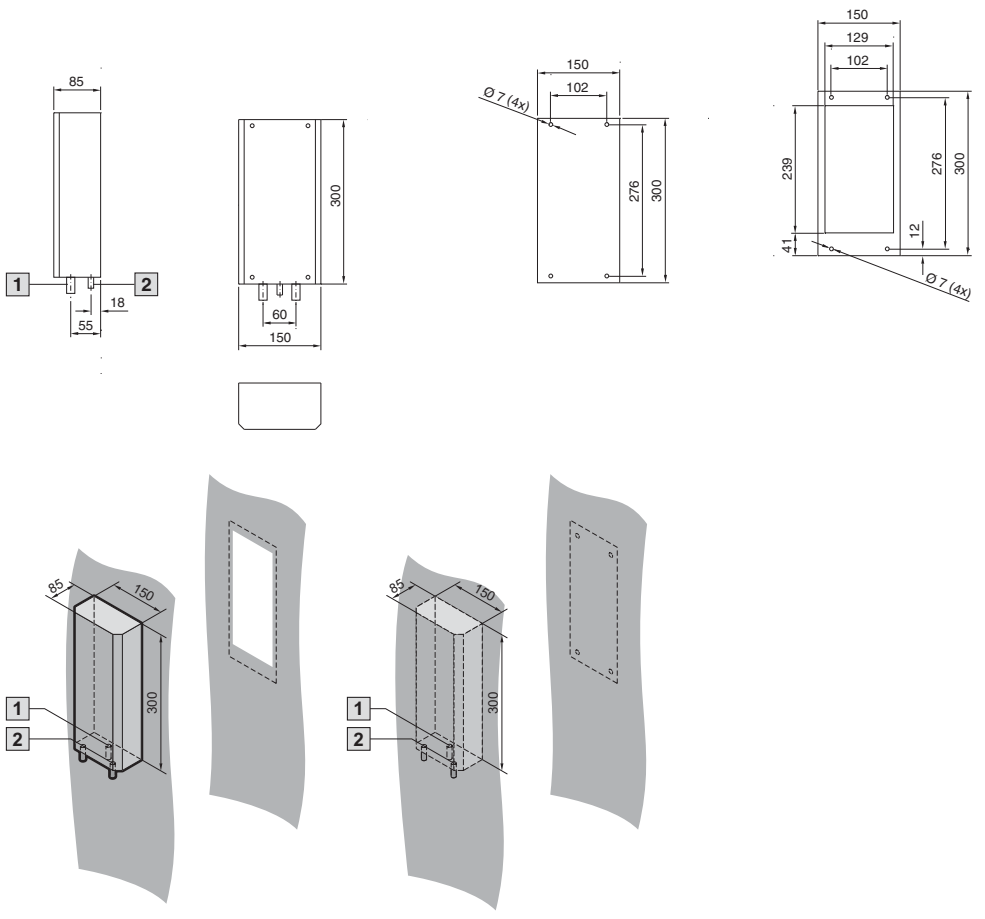

1 Condensate discharge 3/8″
2 Cooling water connection 3/8″

Air/water heat exchangers

Wall-mounted, SK 3214.XXX Catalogue 33, page 437

Mounting holes for internal mounting

Mounting cut-out for external mounting

1 Condensate discharge 1/2″
2 Cooling water connection 1/2″

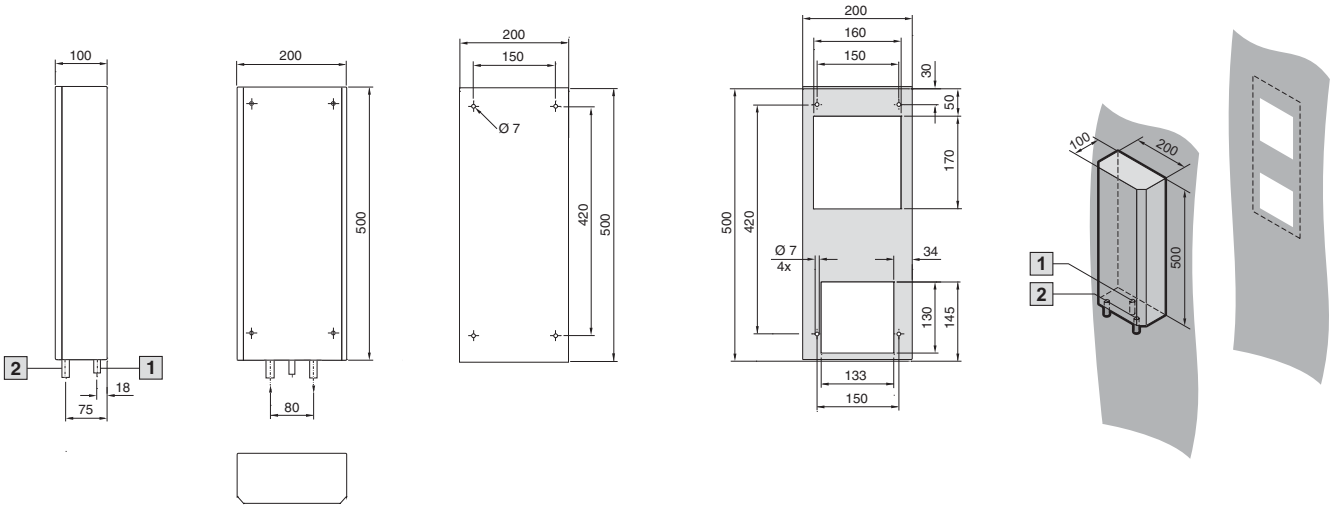

Wall-mounted, SK 3215.XXX Catalogue 33, page 437

Mounting holes for internal mounting

Mounting cut-out for external mounting

1 Condensate discharge 1/2″
2 Cooling water connection 1/2″

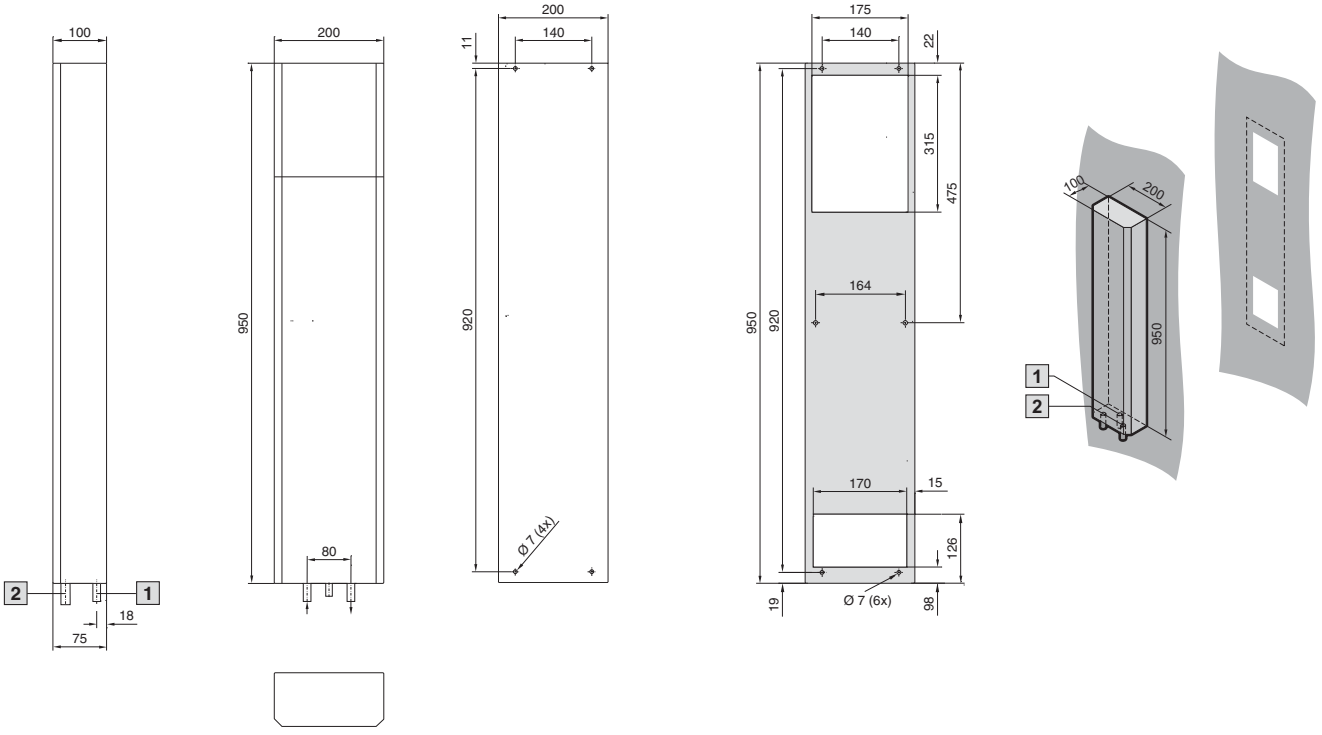

Air/water heat exchangers

Wall-mounted, SK 3363.XXX, SK 3364.XXX Catalogue 33, page 438/441

External mounting

Internal mounting

Mounting cut-out for external mounting

Mounting cut-out for internal mounting

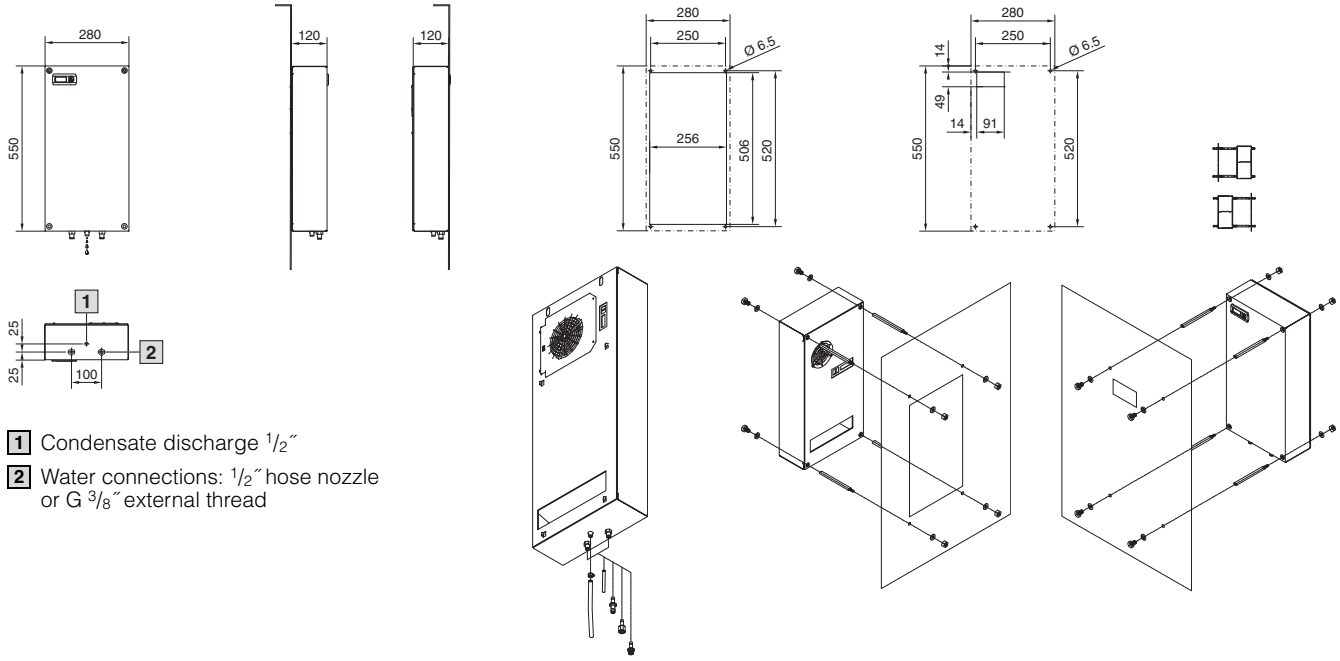

1 Condensate discharge 1/2″

2 Water connections: 1/2″ hose nozzle or G 3/8″ external thread

Wall-mounted, SK 3373.XXX, SK 3374.XXX Catalogue 33, page 439/442

External mounting

Internal mounting

Mounting cut-out for external mounting

Mounting cut-out for internal mounting

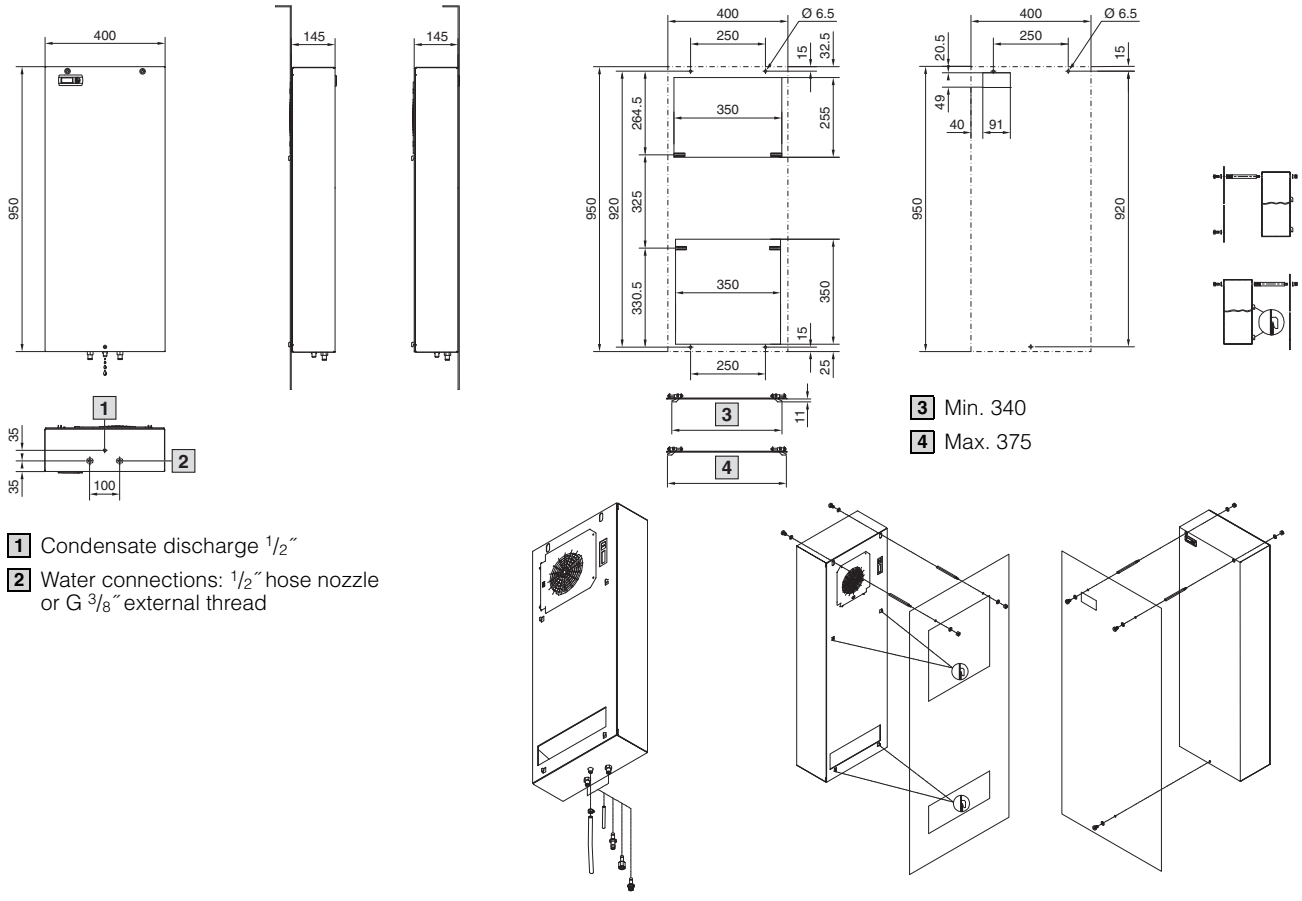

1 Condensate discharge 1/2″

2 Water connections: 1/2″ hose nozzle or G 3/8″ external thread

3 Min. 340

4 Max. 375

Air/water heat exchangers

Wall-mounted, SK 3375.XXX Catalogue 33, page 440/443

External mounting

Internal mounting

Mounting cut-out for external mounting

Mounting cut-out for internal mounting

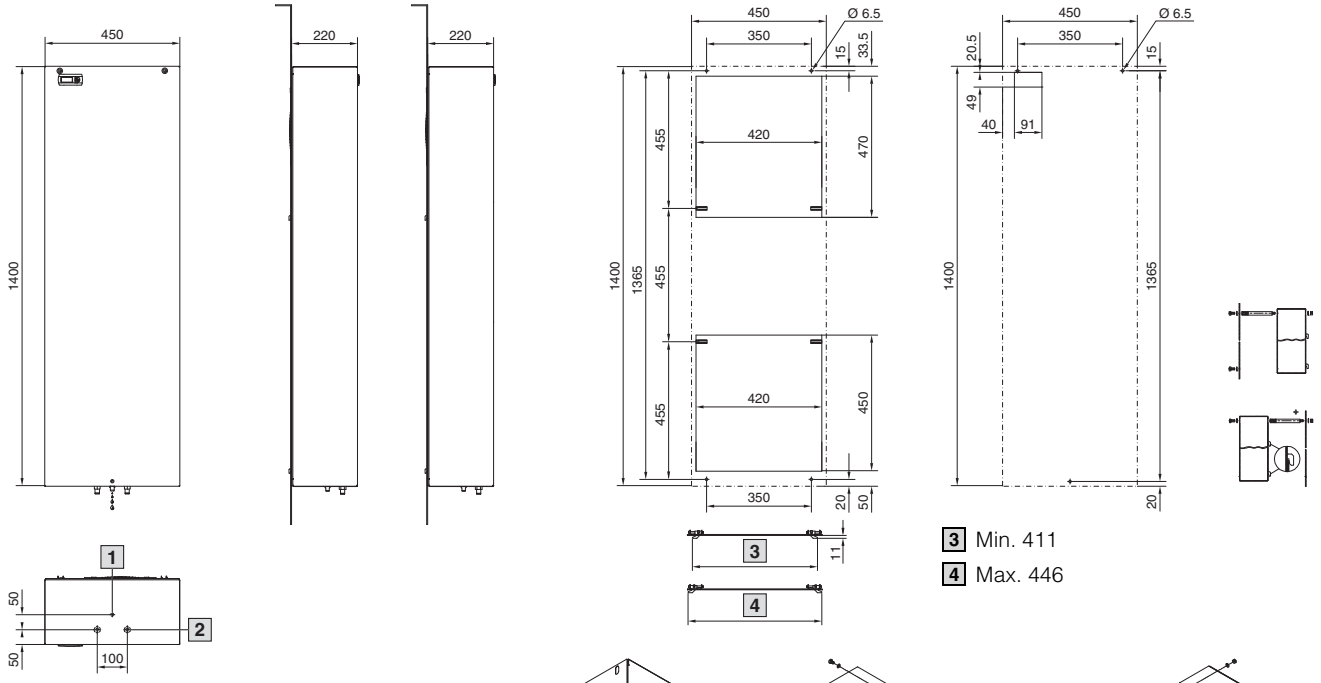

1 Condensate discharge $^{1}/_{2}$″

2 Water connections: $^{1}/_{2}$″ hose nozzle or G $^{3}/_{8}$″ external thread

3 Min. 411

4 Max. 446

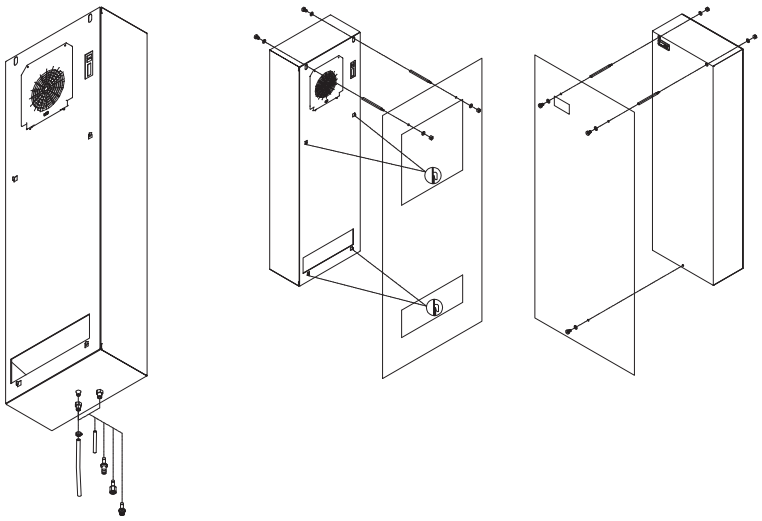

Air/water heat exchangers

Air/water heat exchangers

Wall-mounted, SK 3216.480 Catalogue 33, page 440

Mounting cut-out

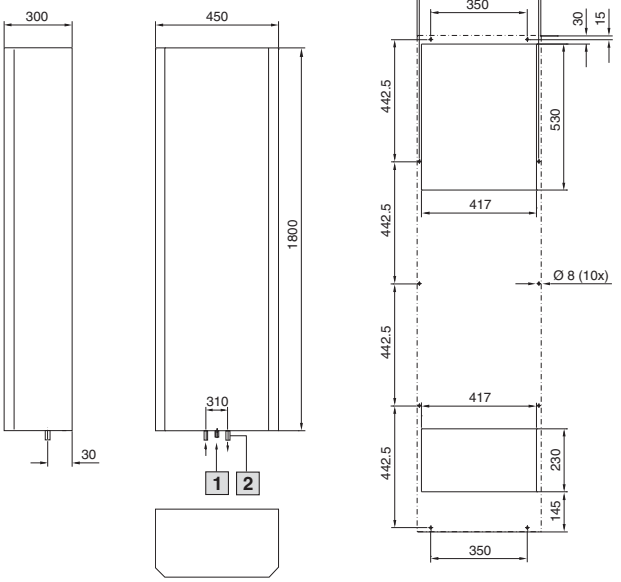

1 Condensate discharge 1/2″

2 Cooling water connection 1/2″

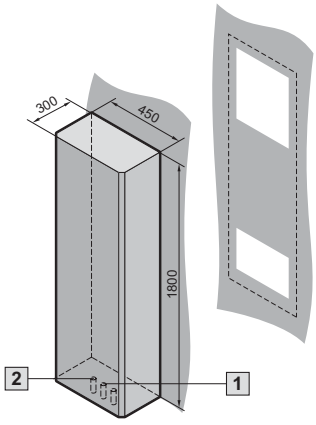

Adaptor frame

Catalogue 33, page 480

Mounting cut-out

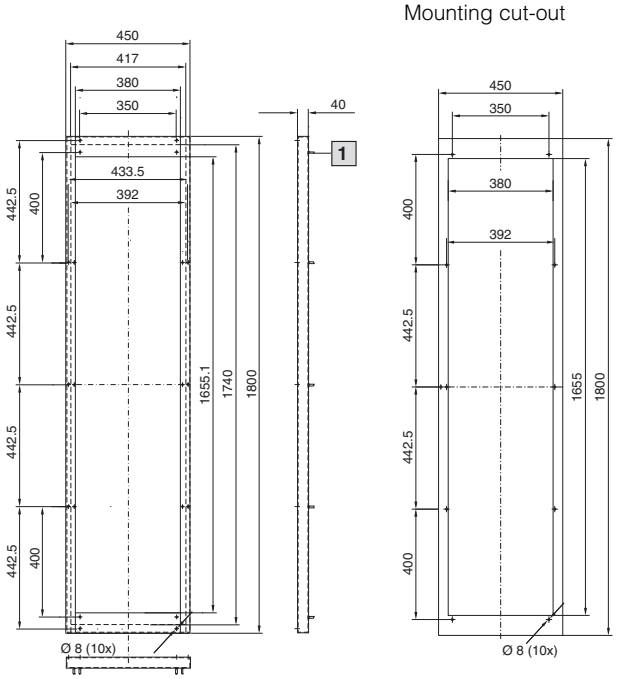

1 Bolts M6 x 20

Cold Plate

Catalogue 33, page 444

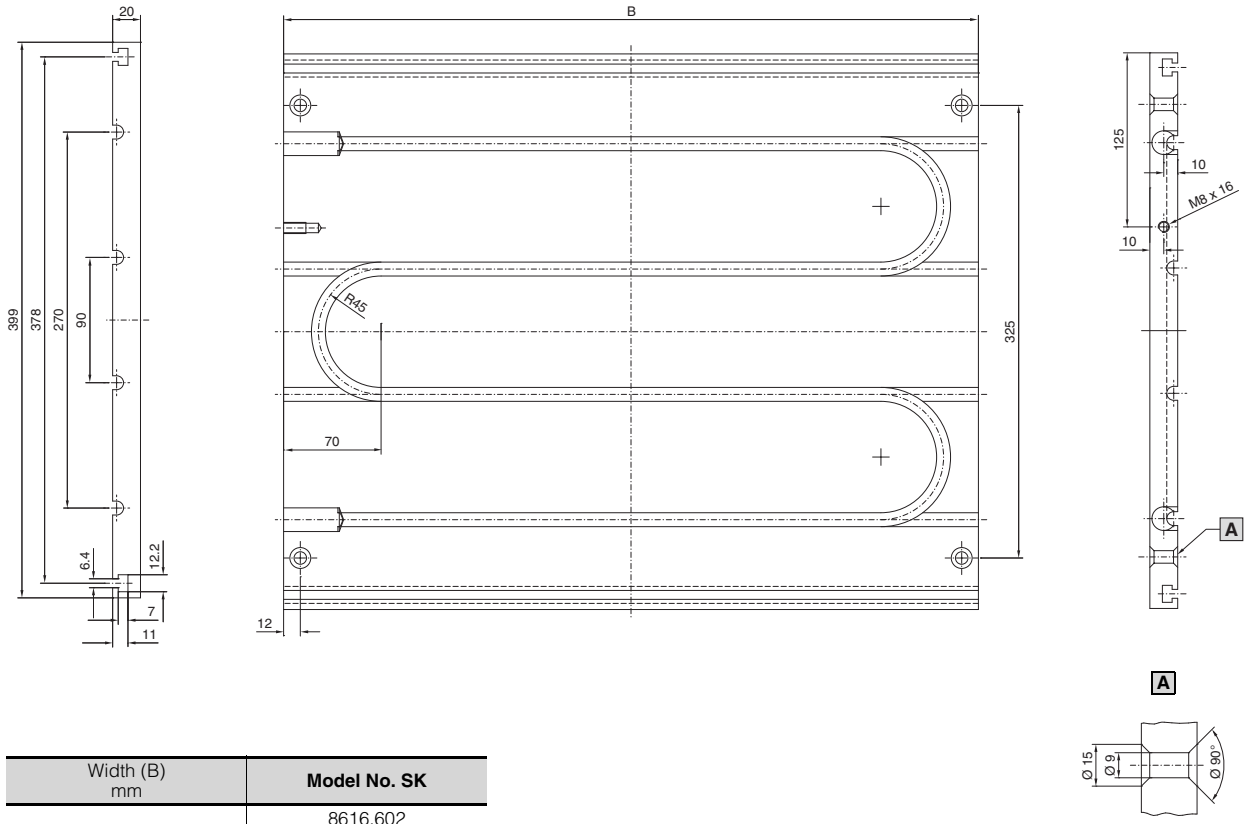

Width (B) mm	Model No. SK
600	8616.602
	8616.622
800	8616.802
	8616.822

Chillers for water

Options for chillers

Catalogue 33, page 446 – 451

	Pressure-sealed system	Open system with tank	Hot gas bypass control in the cooling circuit	More powerful pump(s)	Water level switch	Flow monitor	Stainless steel enclosure	Water-cooled condenser	Upstream pipework, free from non-ferrous metals	Fault signal with individual messages	Ambient temperature control	Automatic bypass (internal)	Automatic bypass (external)	Harting connector	Outdoor siting	Special spray finish	Special voltages	Metal filter mat	Castors	24 V DC control voltage	Filter mat monitoring
TopTherm chiller, cooling output 1 – 6 kW																					
SK 3318.600	■	–	–	□	–	■	□	□	□	■	□	–	□	□	–	□	□	□	□	–	■
SK 3318.610	–	■	–	□	–	■	□	□	□	■	□	–	□	□	–	□	□	□	□	–	■
SK 3319.600	■	–	–	□	–	■	□	□	□	■	□	–	□	□	–	□	□	□	□	–	■
SK 3319.610	–	■	–	□	–	■	□	□	□	■	□	–	□	□	–	□	□	□	□	–	■
SK 3320.600	–	■	□	□	□	■	□	□	□	■	□	□	□	□	–	□	□	□	□	–	■
SK 3334.600	–	■	□	□	□	■	□	□	□	■	□	□	□	□	–	□	□	□	□	–	■
SK 3334.660	–	■	□	□	□	■	□	□	□	■	□	□	□	□	–	□	□	□	□	–	■
TopTherm chiller, for wall mounting, cooling output 1 – 4 kW																					
SK 3360.100	–	■	–	–	–	■	–	–	–	■	□	–	□	□	–	□	–	□	–	–	–
SK 3360.250	–	■	–	–	–	■	–	–	–	■	□	–	□	□	–	□	–	□	–	–	–
SK 3360.470	–	■	□	□	–	■	–	–	–	■	□	–	□	□	–	□	–	□	–	–	–
TopTherm chiller, cooling output 8 – 40 kW																					
SK 3335.790	–	■	□	□	□	□	□	□	□	■	□	□	□	□	□	□	□	□	□	□	□
SK 3335.830	–	■	□	□	□	□	□	□	□	■	□	□	□	□	□	□	□	□	□	□	□
SK 3335.840	–	■	□	□	□	□	□	□	□	■	□	□	□	□	□	□	□	□	□	□	□
SK 3335.850	–	■	□	□	□	□	□	□	□	■	□	□	□	□	□	□	□	□	□	□	□
SK 3335.860	–	■	□	□	□	□	□	□	□	■	□	□	□	□	□	□	□	□	□	□	□
SK 3335.870	–	■	□	□	□	□	□	□	□	■	□	□	□	□	□	□	□	□	–	□	□
SK 3335.880	–	■	□	□	□	□	□	□	□	■	□	□	■	□	□	□	□	□	–	□	□
SK 3335.890	–	■	□	□	□	□	□	□	□	■	□	□	■	□	□	□	□	□	–	□	□

■ Standard □ Optional

Chillers for water

TopTherm, cooling output 1/1.5 kW Catalogue 33, page 446

Key to the adjacent drawing:

- 1 Compressor
- 5 Condenser
- 10 Condenser fan
- 15 Evaporator coil
- 20 Expansion valve
- 25 Filter dryer
- 35 Filling
- 45 Vent valve
- 50 Temperature sensor
- 55 Pump
- 60 Flow monitor
- 61 Overpressure valve
- 65 Pressure relief valve/ alternatively tank
- 70 High-pressure switch

Layout diagram

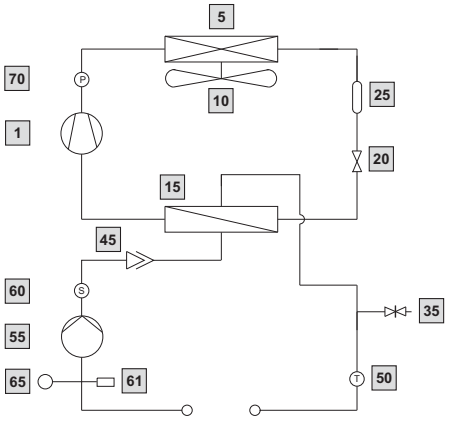

Note:
With an externally lockable cooling cycle, a bypass (overpressure valve) should be provided in the external water pipes.

Characteristic curves of pump
Model No. SK
3318.600/3318.610/
3319.600/3319.610

50 Hz

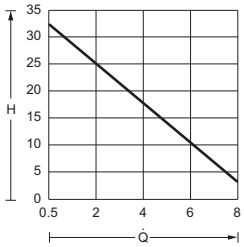

60 Hz

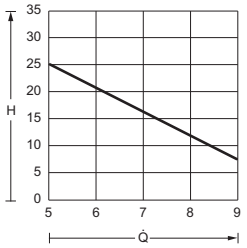

H = Delivery head H [m]
Q̇ = Delivery flow Q [l/min]

TopTherm, cooling output 3/4.5/6 kW Catalogue 33, page 447

Key to the adjacent drawing:

- 1 Compressor
- 5 Condenser
- 10 Condenser fan
- 15 Evaporator coil
- 20 Expansion valve
- 25 Filter dryer
- 30 Tank
- 35 Filling
- 40 Tank drain
- 46 Water level switch, optional
- 50 Temperature sensor
- 55 Pump
- 60 Flow monitor
- 70 High-pressure switch

Layout diagram

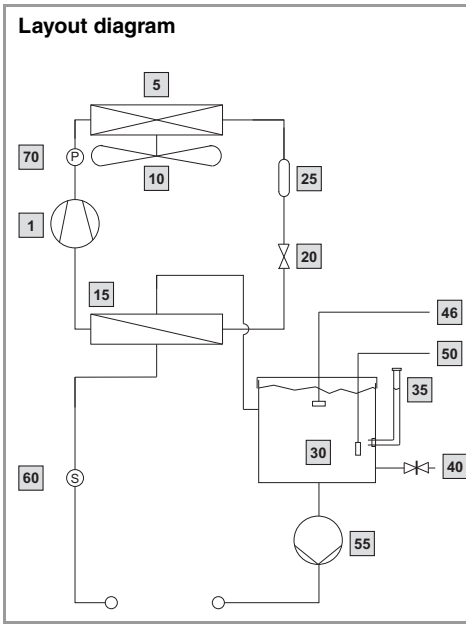

Note:
With an externally lockable cooling cycle, a bypass (overpressure valve) should be provided in the external water pipes.

Characteristic curves of pump
Model No. SK
3320.600/3334.600/3334.660

50 Hz

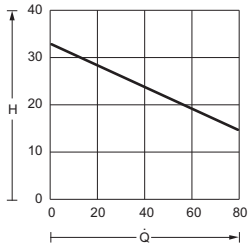

60 Hz

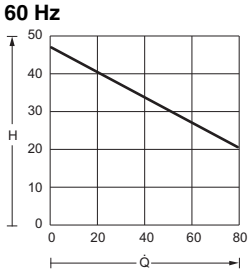

H = Delivery head H [m]
Q̇ = Delivery flow Q [l/min]

Chillers for water

Chillers for water

TopTherm, for wall mounting, cooling output 1/2.5/4 kW Catalogue 33, page 448

Key to the adjacent drawing:

- 1 Compressor
- 5 Condenser
- 10 Condenser fan
- 15 Evaporator coil
- 20 Expansion valve
- 25 Filter dryer
- 30 Tank
- 35 Filling
- 40 Tank drain
- 50 Temperature sensor
- 55 Pump
- 60 Flow monitor
- 70 High-pressure switch

Layout diagram

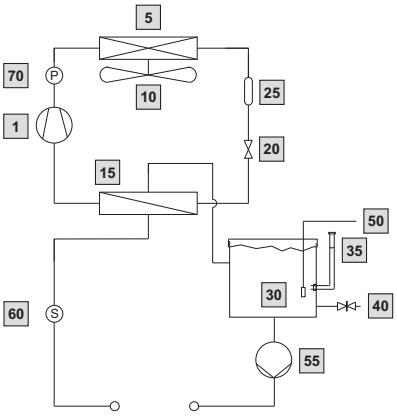

Note:
With an externally lockable cooling cycle, a bypass (overpressure valve) should be provided in the external water pipes.

Characteristic curves of pump
Model No. SK 3360.100/3360.250

50 Hz

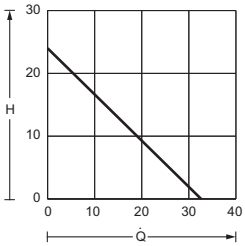

60 Hz

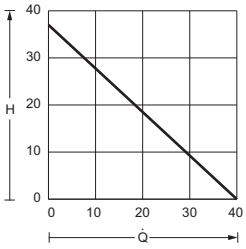

Characteristic curves of pump
Model No. SK 3360.470

50 Hz

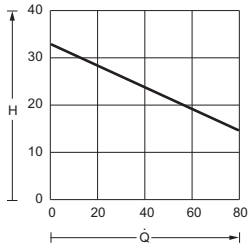

60 Hz

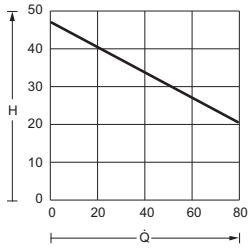

H = Delivery head H [m]
Q̇ = Delivery flow Q [l/min]

H = Delivery head H [m]
Q̇ = Delivery flow Q [l/min]

TopTherm, cooling output 8 to 25 kW Catalogue 33, page 449

Key to the adjacent drawing:

- 1 Compressor
- 5 Condenser
- 10 Condenser fan
- 15 Evaporator coil
- 20 Expansion valve
- 22 Magnetic valve
- 25 Filter dryer
- 30 Tank
- 31 Manometer
- 32 Automatic bypass valve (optional)
- 35 Filling
- 40 Tank drain
- 48 Level indicator
- 55 Pump
- 60 Flow monitor (optional)
- 70 High-pressure switch
- 71 Low-pressure switch
- 80 Thermostat

Layout diagram

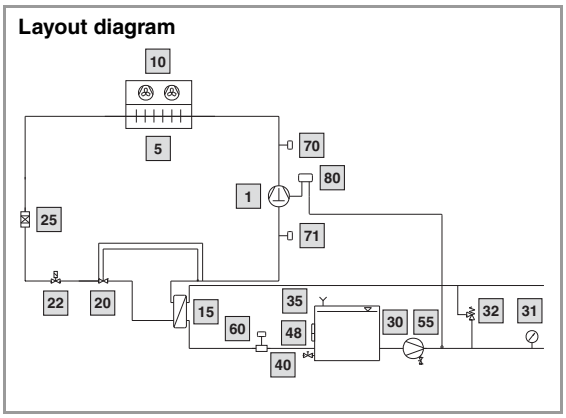

Characteristic curves of pump
Model No. SK 3335.790/3335.830

50 Hz

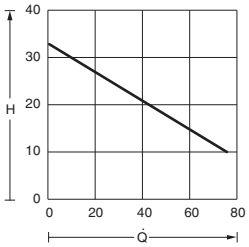

Model No. SK 3335.790/3335.830

60 Hz

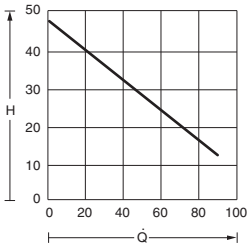

Model No. SK 3335.840/3335.850

50 Hz

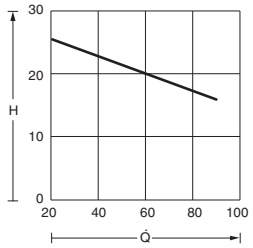

Model No. SK 3335.840/3335.850

60 Hz

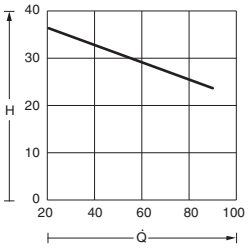

Model No. SK 3335.860/3335.870

50 Hz

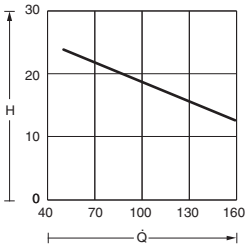

Model No. SK 3335.860/3335.870

60 Hz

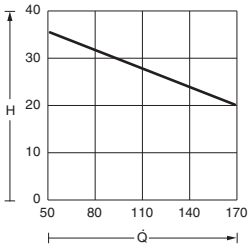

H = Delivery head H [m] Q̇ = Delivery flow Q [l/min]

Chillers for water

TopTherm, cooling output 32 to 40 kW Catalogue 33, page 449

Key to the adjacent drawing:

- 1 Compressor
- 5 Condenser
- 10 Condenser fan
- 15 Evaporator coil
- 20 Expansion valve
- 22 Magnetic valve
- 25 Filter dryer
- 30 Tank
- 31 Manometer
- 32 Automatic bypass valve (optional)
- 35 Filling
- 40 Tank drain
- 48 Level indicator
- 55 Pump
- 60 Flow monitor (optional)
- 70 High-pressure switch
- 71 Low-pressure switch
- 80 Thermostat

Layout diagram

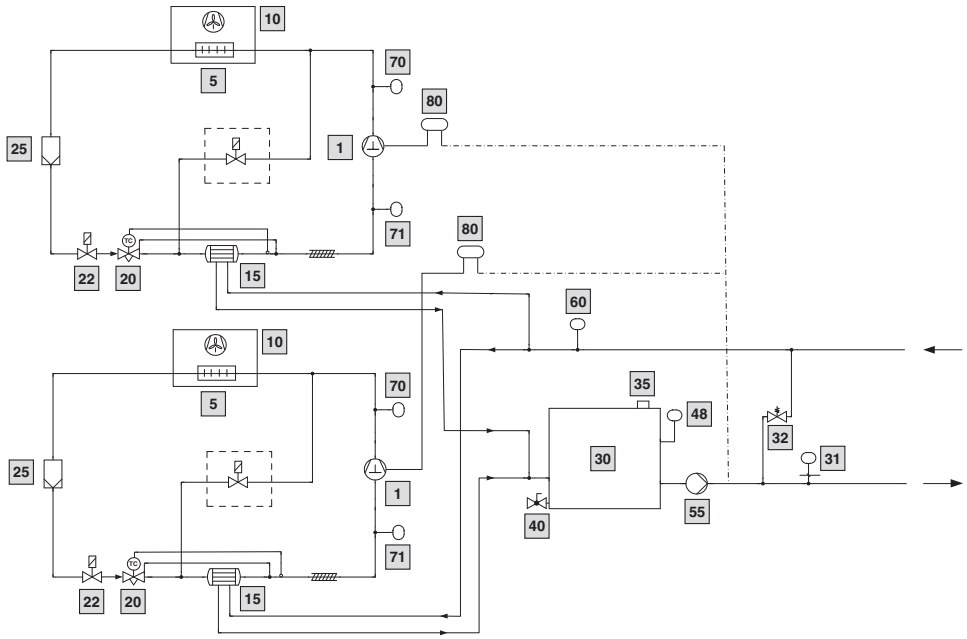

Characteristic curves of pump

Model No. SK
3335.880/3335.890

50 Hz

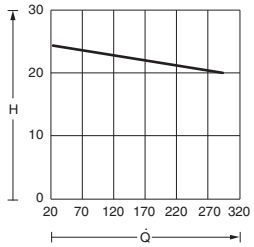

Model No. SK
3335.880/3335.890

60 Hz

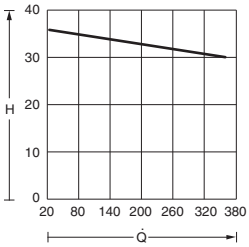

H = Delivery head H [m] Q̇ = Delivery flow Q [l/min]

Chillers for water

In floor-standing enclosure, cooling output 10 to 59 kW Catalogue 33, page 451

Key to the adjacent drawing:

1 Compressor
5 Condenser
10 Condenser fan
15 Evaporator coil
20 Expansion valve
22 Magnetic valve
23 Liquid collector
25 Filter dryer
30 Tank
31 Manometer
35 Filling
40 Tank drain
48 Level indicator
55 Pump
60 Flow monitor
70 High-pressure switch
71 Low-pressure switch
80 Thermostat

Layout diagram

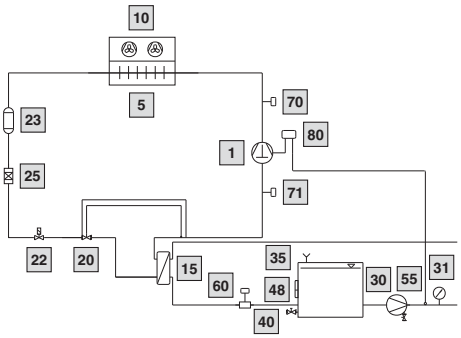

Note:
With an externally lockable cooling cycle, a bypass (overpressure valve) should be provided in the external water pipes.

Characteristic curves of pump

Model No. SK
3336.700/3336.710/3336.720

50 Hz

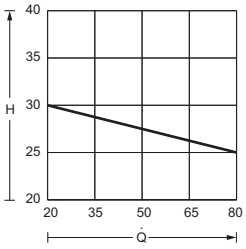

Model No. SK
3336.730/3336.740/3336.750

50 Hz

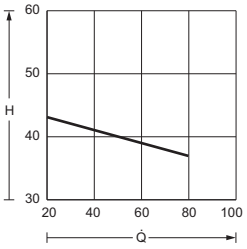

Model No. SK
3339.100/3339.200

50 Hz

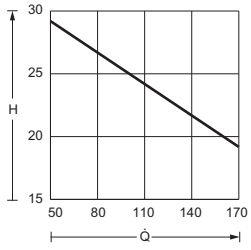

Model No. SK
3339.100/3339.200

60 Hz

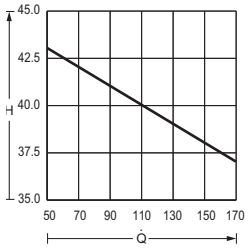

H = Delivery head H [m]
Q̇ = Delivery flow Q [l/min]

Model No. SK
3339.250/3339.280

50 Hz

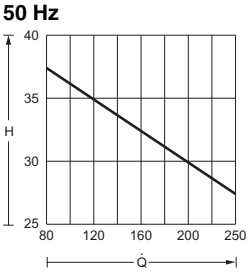

H = Delivery head H [m]
Q̇ = Delivery flow Q [l/min]

Chillers for IT cooling

Cooling output 15 to 124 kW Catalogue 33, page 454

Key to the adjacent drawing:

1 Compressor with oil sump heater
2 Duo pressure monitor LP/HP
3 Condenser with fan
4 Non-return valve
5 Pressure sensor
6 Expansion valve
7 Inspection glass
8 Magnetic valve
9 Filter dryer
10 Evaporator coil
11 Safety assembly
12 Flow monitor
13 Thermostat
14 Draining/filling
15 Pressure relief valve
16 Bypass valve
17 Manometer
18 Pump
19 Return IN
20 Inlet OUT
21 Tank
22 Refrigerant collector

Layout diagram

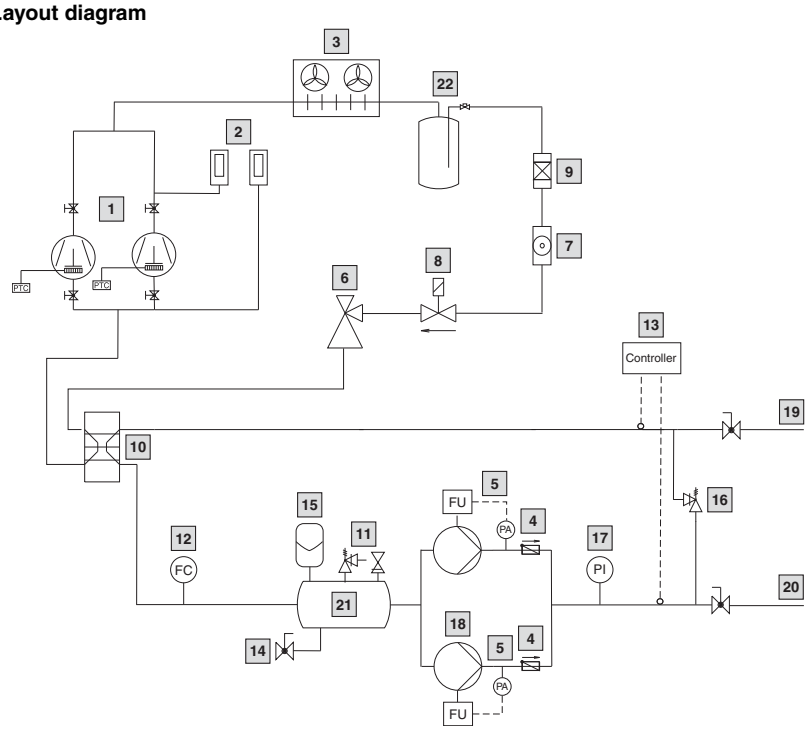

Cooling output 155 to 481 kW Catalogue 33, page 455

Key to the adjacent drawing:

1 Compressor with oil sump heater
2 Duo pressure monitor LP/HP
3 Condenser with fan
4 Non-return valve
5 Pressure sensor
6 Expansion valve
7 Inspection glass
8 Magnetic valve
9 Filter dryer
10 Evaporator coil
11 Safety assembly
12 Flow monitor
13 Thermostat
14 Draining/filling
15 Pressure relief valve
16 Bypass valve
17 Manometer
18 Pump
19 Return IN
20 Inlet OUT
21 Tank

Layout diagram

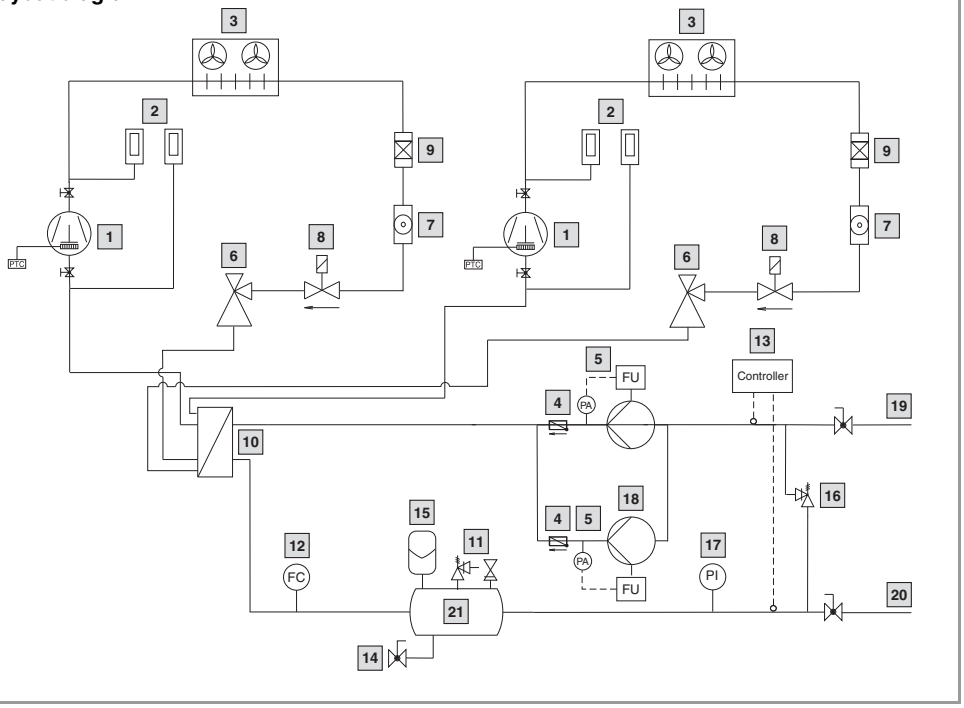

Enclosure heaters

Enclosure heaters

Continuous thermal output 10 – 800 W Catalogue 33, page 471

Without fan

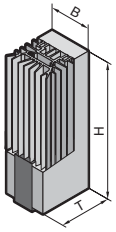

With fan

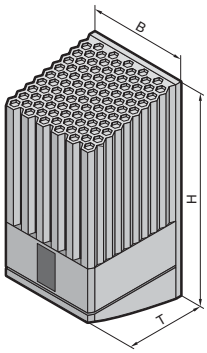

Without fan

Model No. SK	W (B) mm	H mm	D (T) mm
3105.310	45	120	46
3105.320	45	120	46
3105.330	64	155	56
3105.340	64	155	56
3105.350	64	230	56
3105.360	90	165	75
3105.370	90	180	75

With fan

Model No. SK	W (B) mm	H mm	D (T) mm
3105.380	103	200	103
3105.390	103	200	103
3105.400	103	200	103
3105.410	103	200	103
3105.420	103	200	103
3105.430	103	200	103

SK 3105.380 – SK 3105.430

Attachment to mounting plates

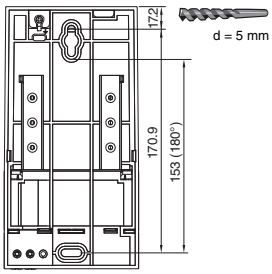

Attachment to support rail

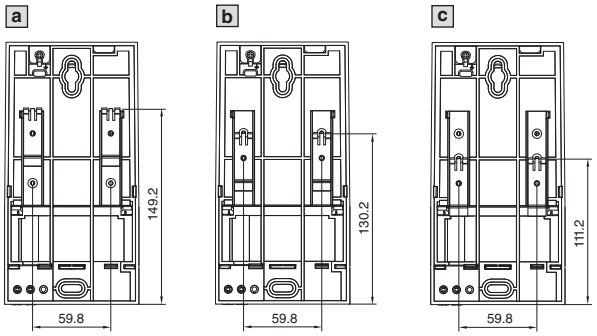

SK 3105.310/SK 3105.320

Attachment to mounting plates

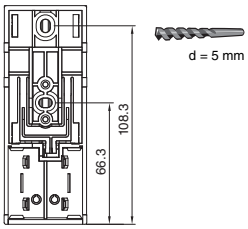

Attachment to support rail

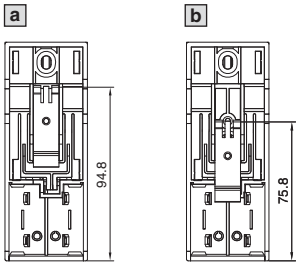

SK 3105.330 – SK 3105.350

Attachment to mounting plates

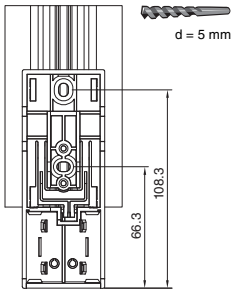

Attachment to support rail

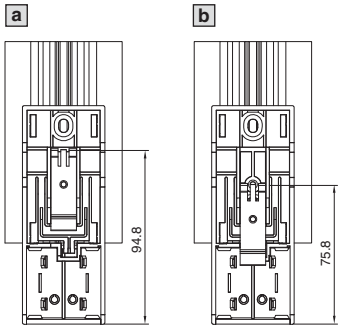

SK 3105.360/SK 3105.370

Attachment to mounting plates

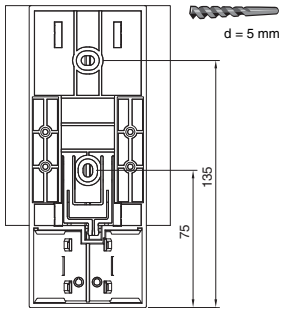

Attachment to support rail

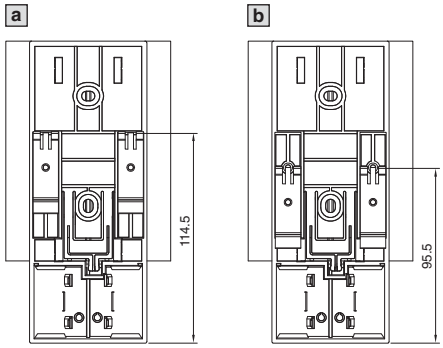

Electric condensate evaporator

Catalogue 33, page 484

SK 3301.560/.580

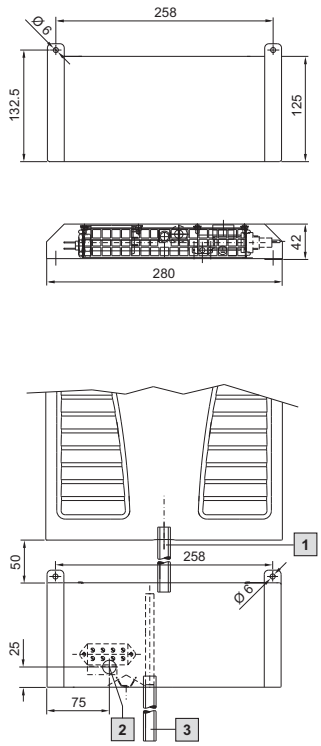

SK 3301.570/.590

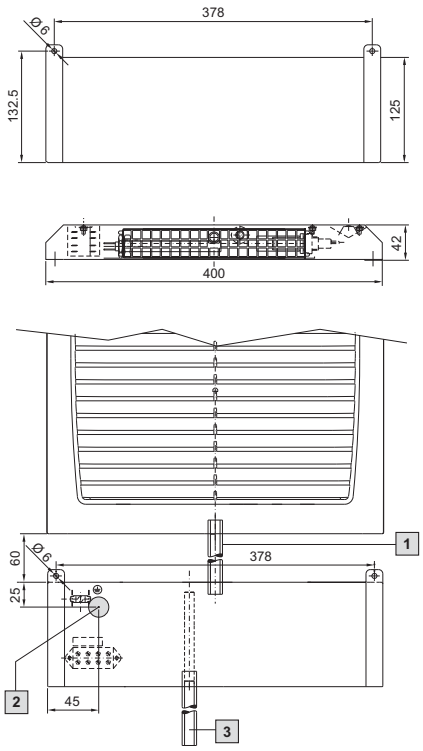

1 Condensate hose
SK 3301.608 for SK 3302.XXX
SK 3301.610 for SK 3303.XXX

2 Suggestion for position of cable entry

3 Hose
Length as required

1 Condensate hose SK 3301.612

2 Suggestion for position of cable entry

3 Hose
Length as required

Integrated louvres

Catalogue 33, page 480

SK 2541.235

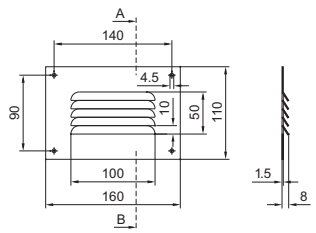

SK 2542.235

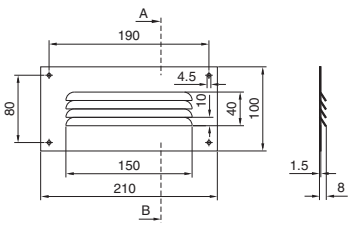

SK 2543.235

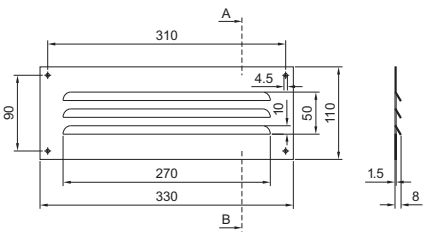

Approvals

	Model No. SK	UR	cUR	VDE	GS	CSA	Cat. 33, page
TopTherm fan-and-filter units							
Air throughput 20 – 66 m³/h	3237.100	■	■	–	–	■	394
	3237.600	■	■	–	–	■	394
	3237.110	■	■	–	–	■	394
	3237.124	■	■	–	–	■	394
	3238.100	■	■	–	–	■	394
	3238.600	■	■	–	–	■	394
	3238.110	■	■	–	–	■	394
	3238.124	■	■	–	–	■	394
Air throughput 105 – 120 m³/h	3239.100	■	■	–	–	■	395
	3239.600	■	■	–	–	■	395
	3239.110	■	■	–	–	■	395
	3239.124	■	■	–	–	■	395
Air throughput 180 – 250 m³/h	3240.100	■	■	–	–	■	396
	3240.600	■	■	–	–	■	396
	3240.110	■	■	–	–	■	396
	3240.124	■	■	–	–	■	396
	3241.100	■	■	–	–	■	396
	3241.600	■	■	–	–	■	396
	3241.110	■	■	–	–	■	396
	3241.124	■	■	–	–	■	396
Air throughput 550 – 770 m³/h	3243.100	■	■	–	–	■	397
	3243.600	■	■	–	–	■	397
	3243.110	■	■	–	–	■	397
	3244.100	■	■	–	–	■	397
	3244.600	■	■	–	–	■	397
	3244.110	■	■	–	–	■	397
	3244.140	■	■	–	–	■	397
Air throughput 900 m³/h	3245.500	■[1)]	■[1)]	–	–	■[1)]	398
	3245.510	■[1)]	■[1)]	–	–	■[1)]	398
	3245.600	■[1)]	■[1)]	–	–	■[1)]	398

[1)] from February 2013

Rack-mounted fans/tangential fans for 482.6 mm (19˝)							
Rack-mounted fan, air throughput 320/480 m³/h	3340.024	–	–	–	–	–	399
	3340.115	–	–	–	–	–	399
	3340.230	–	–	–	–	–	399
	3341.024	–	–	–	–	–	399
	3341.115	–	–	–	–	–	399
	3341.230	–	–	–	–	–	399
	3342.024	–	–	–	–	–	399
	3342.115	–	–	–	–	–	399
	3342.230	–	–	–	–	–	399
	3342.500	–	–	–	–	–	399
Rack-mounted fan Vario, air throughput 320/480 m³/h	3350.024	–	–	–	–	–	400
	3350.115	–	–	–	–	–	400
	3350.230	–	–	–	–	–	400
	3351.024	–	–	–	–	–	400
	3351.115	–	–	–	–	–	400
	3351.230	–	–	–	–	–	400
	3356.100	–	–	–	–	–	400
	3355.100	–	–	–	–	–	400
	3352.024	–	–	–	–	–	400
	3352.115	–	–	–	–	–	400
	3352.230	–	–	–	–	–	400
	3352.500	–	–	–	–	–	400
	3357.100	–	–	–	–	–	400
Tangential fan, air throughput 320 m³/h	3145.000	–	–	–	–	–	400
	3144.000	–	–	–	–	–	400

Approvals

	Model No. SK	UR	cUR	VDE	GS	CSA	Cat. 33, page
Fan systems							
RTT roof-mounted fan and vent attachment	3149.410	–	–	–	–	■	401
	3149.420	–	–	–	–	■	401
	3149.440	–	–	–	–	–	401
	3149.810	–	–	–	–	■	401
	3149.820	–	–	–	–	■	401
	3149.840	–	–	–	–	–	401
	8801.380	–	–	–	–	■	401
Roof-mounted fan	3149.007	–	–	–	–	–	402
	3169.007	–	–	–	–	■	402
	3148.007	–	–	–	–	–	402
Roof-mounted fan for TS in the office sector	3164.610	–	–	–	–	–	402
	3164.620	–	–	–	–	–	402
	3164.115	–	–	–	–	–	402
	3164.230	–	–	–	–	–	402
Enclosure internal fan for TS	3108.100	■	■	–	–	–	403
	3108.115	■	■	–	–	–	403
	3108.024	■	■	–	–	–	403
Fan mounting plate for TS	7966.035	–	–	–	–	–	403
	7968.035	–	–	–	–	–	403
	7986.035	–	–	–	–	–	403
	7988.035	–	–	–	–	–	403
Mini-fan	3236.124	■	■	–	–	–	404
Fan expansion kit	7980.000	–	–	–	–	–	404
	7980.100	–	–	–	–	–	404
	7980.148	–	–	–	–	–	404
Cover plates for fan panels	7507.760	–	–	–	–	–	404
Fan roof, modular, two-piece	7826.366	–	–	–	–	–	405
	7826.368	–	–	–	–	–	405
	7826.360	–	–	–	–	–	405
	7826.486	–	–	–	–	–	405
	7826.488	–	–	–	–	–	405
	7826.480	–	–	–	–	–	405
	2102.320	–	–	–	–	–	405
	2102.490	–	–	–	–	–	405
	7885.000	–	–	–	–	–	405
	7886.000	–	–	–	–	–	405
	2102.180	–	–	–	–	–	405
	2102.190	–	–	–	–	–	405
	7885.100	–	–	–	–	–	405
	7886.100	–	–	–	–	–	405
	2102.400	–	–	–	–	–	405
	2102.410	–	–	–	–	–	405
	7885.200	–	–	–	–	–	405
	7886.200	–	–	–	–	–	405
Fan unit, active	7000.670	–	–	–	–	–	406
Active kit	7000.680	–	–	–	–	–	406
Door-mounted fan	3165.624	–	–	–	–	–	407
	3165.648	–	–	–	–	–	407
	3165.615	–	–	–	–	–	407
	3165.630	–	–	–	–	–	407
	3165.824	–	–	–	–	–	407
	3165.848	–	–	–	–	–	407
	3165.815	–	–	–	–	–	407
	3165.830	–	–	–	–	–	407
Fan expansion kit	3165.024	–	–	–	–	–	407
	3165.048	–	–	–	–	–	407
	3165.115	–	–	–	–	–	407
	3165.230	–	–	–	–	–	407

Approvals

	Model No. SK	UR	cUR	VDE	GS	CSA	Cat. 33, page
Air/air heat exchangers							
Wall-mounted with controller, 17.5 – 45 W/K	3126.100	■	■	–	–	–	409
	3126.115	■	■	–	–	–	409
	3127.100	■	■	–	–	–	409
	3127.115	■	■	–	–	–	409
	3128.100	■	■	–	–	–	409
	3128.115	■	■	–	–	–	409
Wall-mounted with controller, 60 – 90 W/K	3129.100	■	■	–	–	–	409
	3129.115	■	■	–	–	–	409
	3130.100	■	■	–	–	–	409
	3130.115	■	■	–	–	–	409
Wall-mounted, railway-compatible version	3126.424	–	–	–	–	–	410
	3128.424	–	–	–	–	–	410
	3129.424	–	–	–	–	–	410
	3130.424	–	–	–	–	–	410
	3126.410	–	–	–	–	–	410
	3128.410	–	–	–	–	–	410
	3129.410	–	–	–	–	–	410
	3130.410	–	–	–	–	–	410
Roof-mounted	3248.000	–	–	–	–	–	411
Thermoelectric coolers							
Useful cooling output 100 W, thermal output 100 W	3201.200	–	–	–	–	–	414
	3201.300	–	–	–	–	–	414
Wall-mounted cooling units							
TopTherm “Blue e”, useful cooling output 500 W	3303.500	■	■	–	■	■	417
	3303.510	■	■	–	■	■	417
	3303.600	■	■	–	■	■	417
	3303.610	■	■	–	■	■	417
TopTherm “Blue e”, useful cooling output 750 W	3361.500	■	■	–	■	■	418
	3361.510	■	■	–	■	■	418
	3361.540	■	■	–	■	■	418
	3361.600	■	■	–	■	■	418
	3361.610	■	■	–	■	■	418
	3361.640	■	■	–	■	■	418
TopTherm “Blue e”, useful cooling output 1000 W	3304.500	■	■	–	■	■	419
	3304.510	■	■	–	■	■	419
	3304.540	■	■	–	■	■	419
	3304.600	■	■	–	■	■	419
	3304.610	■	■	–	■	■	419
	3304.640	■	■	–	■	■	419
TopTherm “Blue e”, useful cooling output 1500 W	3305.500	■	■	–	■	■	420
	3305.510	■	■	–	■	■	420
	3305.540	■	■	–	■	■	420
	3305.600	■	■	–	■	■	420
	3305.610	■	■	–	■	■	420
	3305.640	■	■	–	■	■	420
TopTherm “Blue e”, useful cooling output 2000 W	3328.500	■	■	–	■	■	421
	3328.510	■	■	–	■	■	421
	3328.540	■	■	–	■	■	421
	3328.600	■	■	–	■	■	421
	3328.610	■	■	–	■	■	421
	3328.640	■	■	–	■	■	421
TopTherm “Blue e”, useful cooling output 2500 W	3329.500	■	■	–	■	■	422
	3329.510	■	■	–	■	■	422
	3329.540	■	■	–	■	■	422
	3329.600	■	■	–	■	■	422
	3329.610	■	■	–	■	■	422
	3329.640	■	■	–	■	■	422
TopTherm “Blue e”, useful cooling output 4000 W	3332.540	■	■	–	■	■	422
	3332.640	■	■	–	■	■	422
TopTherm, horizontal format, useful cooling output 300 W	3302.300	■	■	–	■	■	415
	3302.310	■	■	–	■	–	415

Approvals

	Model No. SK	UR	cUR	VDE	GS	CSA	Cat. 33, page
Wall-mounted cooling units							
TopTherm, useful cooling output 300 W	3302.100	■	■	–	■	■	416
	3302.110	■	■	–	■	■	416
	3302.200	■	■	–	■	■	416
	3302.210	■	■	–	■	■	416
TopTherm “Blue e”, slimline, useful cooling output 1500 W	3366.500	■	■	–	■	■	423
	3366.510	■	■	–	■	■	423
	3366.540	–	–	–	■	■	423
	3366.600	■	■	–	■	■	423
	3366.610	■	■	–	■	■	423
	3366.640	–	–	–	■	■	423
TopTherm “Blue e”, design NEMA 4X, useful cooling output 500/1000/1500 W	3303.504	■	■	–	–	■	424
	3303.514	■	■	–	–	■	424
	3304.504	■	■	–	–	■	424
	3304.514	■	■	–	–	■	424
	3304.544	■	■	–	–	■	424
	3305.504	■	■	–	–	■	424
	3305.514	■	■	–	–	■	424
	3305.544	■	■	–	–	■	424
TopTherm “Blue e”, design NEMA 4X, useful cooling output 2000/2500 W	3328.504	■	■	–	–	■	425
	3328.514	■	■	–	–	■	425
	3328.544	■	■	–	–	■	425
	3329.504	■	■	–	–	■	425
	3329.514	■	■	–	–	■	425
	3329.544	■	■	–	–	■	425
TopTherm “Blue e”, Ex cooling units for zone 22 (dust); useful cooling output 500/1000/1500 W	3303.530	–	–	–	–	–	425
	3304.530	–	–	–	–	–	425
	3304.560	–	–	–	–	–	425
	3305.530	–	–	–	–	–	425
	3305.560	–	–	–	–	–	425
Roof-mounted cooling units							
TopTherm “Blue e”, useful cooling output 500 W	3382.500	■	■	–	■	■	426
	3382.600	–	–	–	■	■	426
	3382.510	■	■	–	■	■	426
	3382.610	–	–	–	■	■	426
TopTherm “Blue e”, useful cooling output 750 W	3359.500	■	■	–	■	–	427
	3359.600	■	■	–	■	–	427
	3359.510	■	■	–	■	–	427
	3359.610	■	■	–	■	–	427
	3359.540	■	■	–	■	–	427
	3359.640	■	■	–	■	–	427
TopTherm “Blue e”, useful cooling output 1000 W	3383.500	■	■	–	■	■	427
	3383.600	■	■	–	■	■	427
	3383.510	■	■	–	■	■	427
	3383.610	■	■	–	■	■	427
	3383.540	■	■	–	■	■	427
	3383.640	■	■	–	■	■	427
TopTherm “Blue e”, useful cooling output 1100/3000 W, especially for office and IT applications	3273.500	–	–	–	■	–	428
	3273.515	–	–	–	■	–	428
	3301.800	–	–	–	–	–	428
TopTherm “Blue e”, useful cooling output 1500 W	3384.500	■	■	–	■	■	428
	3384.600	■	■	–	■	■	428
	3384.510	■	■	–	■	■	428
	3384.610	■	■	–	■	■	428
	3384.540	■	■	–	■	■	428
	3384.640	■	■	–	■	■	428
TopTherm “Blue e”, useful cooling output 2000 W	3385.500	■	■	–	■	■	429
	3385.600	■	■	–	■	■	429
	3385.510	■	■	–	■	■	429
	3385.610	■	■	–	■	■	429
	3385.540	■	■	–	■	■	429
	3385.640	■	■	–	■	■	429

Approvals

	Model No. SK	UR	cUR	VDE	GS	CSA	Cat. 33, page
Roof-mounted cooling units							
TopTherm “Blue e”, useful cooling output 3000/4000 W	3386.540	■	■	–	■	■	429
	3386.640	■	■	–	■	■	429
	3387.540	■	■	–	■	■	429
	3387.640	■	■	–	■	■	429
Modular climate control concept							
Cooling modules “Blue e”, 1500/2500 W useful cooling output	3307.700	■	■	–	–	–	430
	3307.710	■	■	–	–	–	430
	3307.740	■	■	–	–	–	430
	3310.700	■	■	–	–	–	430
	3310.710	–	–	–	–	–	430
	3310.740	■	■	–	–	–	430
Section doors for installing cooling modules	3300.040	–	–	–	–	–	431
	3300.050	–	–	–	–	–	431
	3300.060	–	–	–	–	–	431
	3300.070	–	–	–	–	–	431
	3300.080	–	–	–	–	–	431
	3300.090	–	–	–	–	–	431
	3300.110	–	–	–	–	–	431
	3300.120	–	–	–	–	–	431
Air/water heat exchangers							
Roof-mounted, useful cooling output 2500 W, water-carrying parts CuAl	3209.500	■	■	–	–	■	434
	3209.100	■	■	–	–	■	434
Roof-mounted, useful cooling output 4000 W, water-carrying parts CuAl	3210.500	■	■	–	–	■	435
	3210.100	■	■	–	–	■	435
	3210.540	■	■	–	–	■	435
	3210.140	■	■	–	–	■	435
Roof-mounted, useful cooling output 1875 W, water-carrying parts V4A (1.4571)	3209.504	–	–	–	–	–	435
	3209.104	–	–	–	–	–	435
Roof-mounted, useful cooling output 3000 W, water-carrying parts V4A (1.4571)	3210.504	–	–	–	–	–	436
	3210.104	–	–	–	–	–	436
Wall-mounted, useful cooling output 300/600/1250 W	3212.230	–	–	–	–	–	437
	3212.115	–	–	–	–	–	437
	3212.024	–	–	–	–	–	437
	3214.100	■	■	–	–	■	437
	3215.100	■	■	–	–	■	437
Wall-mounted, useful cooling output 500 W, water-carrying parts CuAl	3363.500	■	■	–	–	■	438
	3363.100	■	■	–	–	■	438
Wall-mounted, useful cooling output 1000 W, water-carrying parts CuAl	3364.500	■	■	–	–	■	438
	3364.100	■	■	–	–	■	438
Wall-mounted, useful cooling output 2000 W, water-carrying parts CuAl	3373.500	■	■	–	–	■	439
	3373.100	■	■	–	–	■	439
Wall-mounted, useful cooling output 3000 W, water-carrying parts CuAl	3374.500	■	■	–	–	■	439
	3374.100	■	■	–	–	■	439
Wall-mounted, useful cooling output 5000 W, water-carrying parts CuAl	3375.500	■	■	–	–	■	440
	3375.100	■	■	–	–	■	440
Wall mounting, useful cooling output 7000 W	3216.480	–	–	–	–	■	440
Wall-mounted, useful cooling output 500 W, water-carrying parts V4A (1.4571)	3363.504	–	–	–	–	–	441
	3363.104	–	–	–	–	–	441
Wall-mounted, useful cooling output 750 W, water-carrying parts V4A (1.4571)	3364.504	–	–	–	–	–	441
	3364.104	–	–	–	–	–	441
Wall-mounted, useful cooling output 1750 W, water-carrying parts V4A (1.4571)	3373.504	–	–	–	–	–	442
	3373.104	–	–	–	–	–	442
Wall-mounted, useful cooling output 2500 W, water-carrying parts V4A (1.4571)	3374.504	–	–	–	–	–	442
	3374.104	–	–	–	–	–	442
Wall-mounted, useful cooling output 4000 W, water-carrying parts V4A (1.4571)	3375.504	■	■	–	–	■	443
	3375.104	■	■	–	–	■	443

Approvals

	Model No. SK	UR	cUR	VDE	GS	CSA	Cat. 33, page
Chillers for water							
TopTherm, cooling output 1/1.5 kW	3318.600	–	–	–	■	–	446
	3318.610	–	–	–	■	–	446
	3319.600	–	–	–	■	–	446
	3319.610	–	–	–	■	–	446
TopTherm, cooling output 3/4.5/6 kW	3320.600	–	–	–	■	–	447
	3334.600	–	–	–	■	–	447
	3334.660	–	–	–	■	–	447
TopTherm, for wall mounting, cooling output 1/2.5/4 kW	3360.100	–	–	–	■	–	448
	3360.250	–	–	–	■	–	448
	3360.470	–	–	–	■	–	448
TopTherm, cooling output 8 – 40 kW	3335.790	–	–	–	–	–	449
	3335.830	–	–	–	–	–	449
	3335.840	–	–	–	–	–	449
	3335.850	–	–	–	–	–	449
	3335.860	–	–	–	–	–	449
	3335.870	–	–	–	–	–	449
	3335.880	–	–	–	–	–	449
	3335.890	–	–	–	–	–	449
In floor-standing enclosure, cooling output 2.1 to 7.7 kW	3336.100	–	–	–	–	–	450
	3336.200	–	–	–	–	–	450
	3336.300	–	–	–	–	–	450
	3336.500	–	–	–	–	–	450
	3336.600	–	–	–	–	–	450
	3336.650	–	–	–	–	–	450
In floor-standing enclosure, cooling output 10 to 25 kW	3336.700	–	–	–	–	–	451
	3336.710	–	–	–	–	–	451
	3336.720	–	–	–	–	–	451
	3336.730	–	–	–	–	–	451
	3336.740	–	–	–	–	–	451
	3336.750	–	–	–	–	–	451
In floor-standing enclosure, cooling output 32 to 59 kW	3339.100	–	–	–	–	–	451
	3339.200	–	–	–	–	–	451
	3339.250	–	–	–	–	–	451
	3339.280	–	–	–	–	–	451
Chillers for IT cooling							
Cooling output 15 – 124 kW	3232.700	–	–	–	–	–	454
	3232.710	–	–	–	–	–	454
	3232.720	–	–	–	–	–	454
	3232.730	–	–	–	–	–	454
	3232.740	–	–	–	–	–	454
	3232.750	–	–	–	–	–	454
	3232.760	–	–	–	–	–	454
	3232.770	–	–	–	–	–	454
	3232.780	–	–	–	–	–	454
	3232.790	–	–	–	–	–	454
Cooling output 155 – 481 kW	3232.800	–	–	–	–	–	455
	3232.810	–	–	–	–	–	455
	3232.820	–	–	–	–	–	455
	3232.890	–	–	–	–	–	455
	3232.830	–	–	–	–	–	455
	3232.840	–	–	–	–	–	455
	3232.850	–	–	–	–	–	455
	3232.860	–	–	–	–	–	455
	3232.870	–	–	–	–	–	455
	3232.880	–	–	–	–	–	455

Approvals

	Model No. SK	UR	cUR	VDE	GS	CSA	Cat. 33, page
CS Outdoor climate control							
Air/air heat exchangers and cooling units for CS Toptec	9776.102	–	–	–	–	–	468
	9776.152	–	–	–	–	–	468
	9776.500	–	–	–	–	–	468
	9776.550	–	–	–	–	–	468
Air/air heat exchangers and cooling units for CS modular enclosures	9764.040	–	–	–	–	–	469
	9762.212	–	–	–	–	–	469
	9761.212	–	–	–	–	–	469
	9768.152	–	–	–	–	–	469
Enclosure heaters							
Without fan, continuous thermal output 10 – 150 W	3105.310	■	■	■	–	■[1)]	471
	3105.320	■	■	■	–	■[1)]	471
	3105.330	■	■	■	–	■[1)]	471
	3105.340	■	■	■	–	■[1)]	471
	3105.350	■	■	■	–	■[1)]	471
	3105.360	■	■	■	–	■[1)]	471
	3105.370	■	■	■	–	■[1)]	471
With fan, continuous thermal output 250 – 800 W	3105.410	■	■	■	–	■[1)]	471
	3105.380	■	■	■	–	■[1)]	471
	3105.420	■	■	■	–	■[1)]	471
	3105.390	■	■	■	–	■[1)]	471
	3105.430	■	■	■	–	■[1)]	471
	3105.400	■	■	■	–	■[1)]	471

[1)] from March 2013

Basic Safe

Catalogue 33, page 504

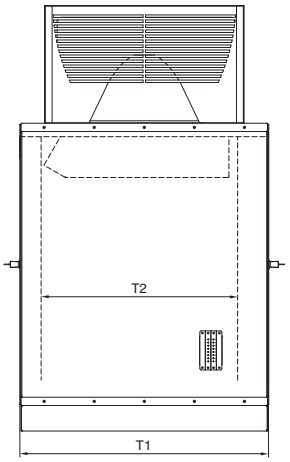

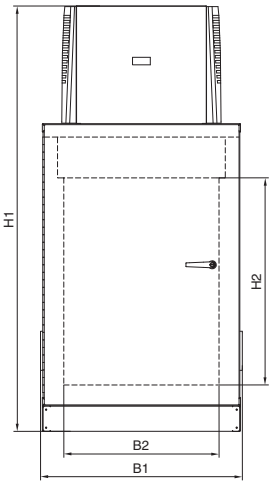

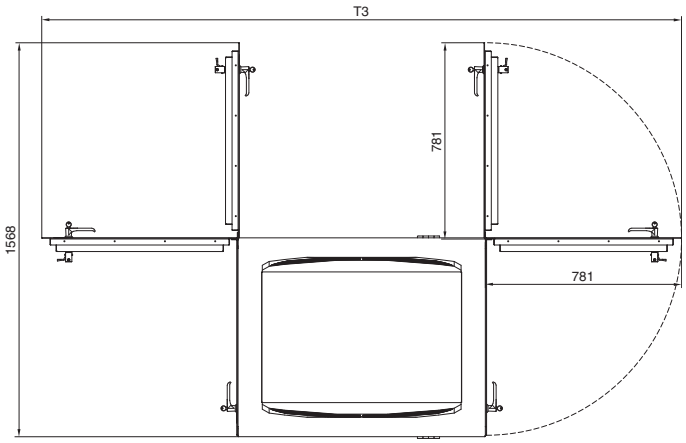

Model No. LS	B1 mm	B2 mm	H1 mm	H2 mm	T1 mm	T2 mm	T3 mm
7999.898	806	620	1699	827	1319	1024	2746

B = Width
T = Depth

Modular Safe/Modular Safe Extend

Catalogue 33, page 505/506

Step-by-step growth of your IT

- Physical hardware protection at high levels of security with fire and theft protection; extinguisher water- and flue gas-tight.
- Multi-functional protection solution for 482.6 mm (19˝) technology, network/ hardware components.
- Modular, mobile security with form-fit connection technology.
- Fire- and theft-proof components may be built around existing, pre-configured network and server enclosures without interruptions to the system.
- Site changes or extensions are easily achieved at any time.

Modular safe units can be effortlessly connected with the computer operational. Each module is equipped with an operator and servicing door plus customer-specific accessories.

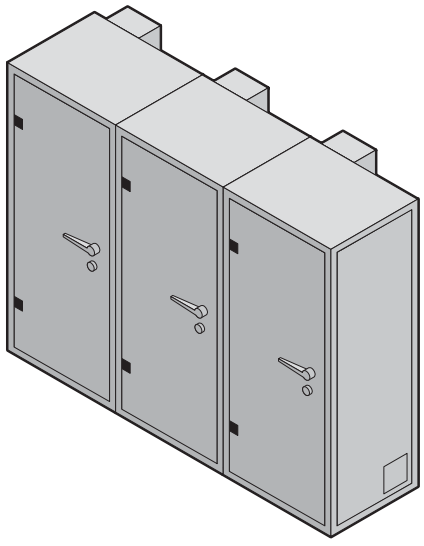

Modular Safe/Modular Safe Extend

Modular Safe

Catalogue 33, page 505

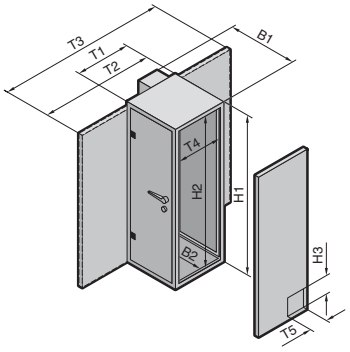

Model No. LS	Two-door-system	B1 mm	B2 mm	H1 mm	H2 mm	H3 mm	T1 mm	T2 mm	T3 mm	T4 mm	T5 mm
7999.892	■	1500	979[1)]	1942	1840	169	1238	2280	3322	1010	262
7999.893		1500	979[1)]	2321	2219	169	1238	2280	3322	1010	262

B = Width
T = Depth

Modular Safe Extend

Catalogue 33, page 506

Single-leaf doors front and rear

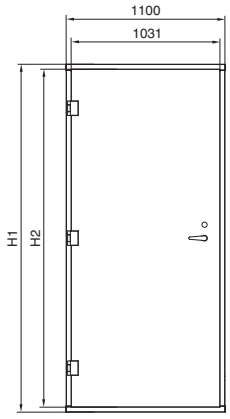

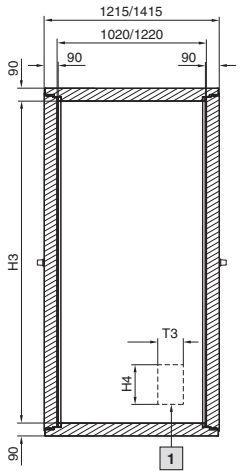

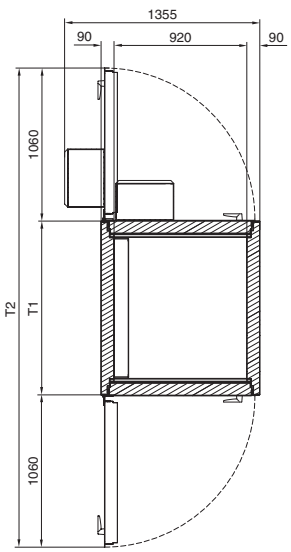

1 Cable duct

Model No. LS	H1 mm	H2 mm	H3 mm	H4 mm	T1 mm	T2 mm	T3 mm	Internal depth mm
7999.896	2210	2141	2030	169	1204	3324	262	1020
7999.897	2410	2341	2230	169	1204	3324	262	1020
7999.983	2210	2141	2030	169	1404	3524	262	1220
7999.987	2410	2341	2230	169	1404	3524	262	1220

T = Depth

Modular Safe Extend

Catalogue 33, page 506

Single-leaf door at the front/double door at the rear

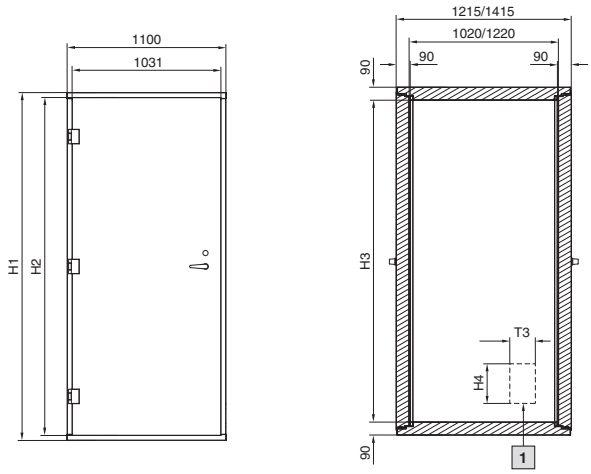

1 Cable duct

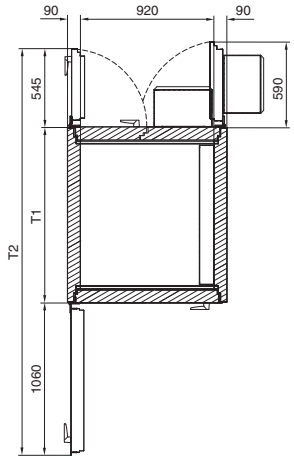

Model No. LS	H1 mm	H2 mm	H3 mm	H4 mm	T1 mm	T2 mm	T3 mm	Internal depth mm
7999.896	2210	2141	2030	169	1204	2809	262	1020
7999.897	2410	2341	2230	169	1204	2809	262	1020
7999.983	2210	2141	2030	169	1404	3009	262	1220
7999.987	2410	2341	2230	169	1404	3009	262	1220

Double doors front and rear

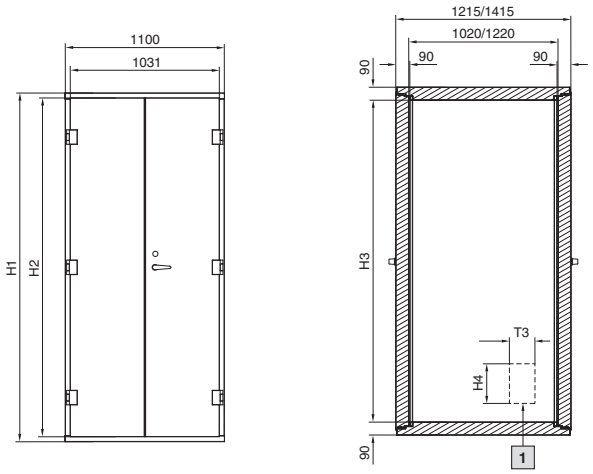

1 Cable duct

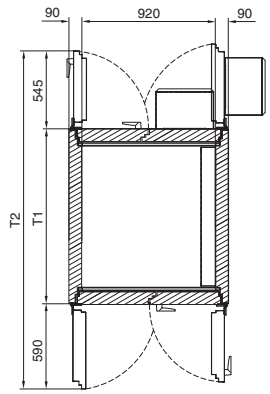

Model No. LS	H1 mm	H2 mm	H3 mm	H4 mm	T1 mm	T2 mm	T3 mm	Internal depth mm
7999.896	2210	2141	2030	169	1204	2339	262	1020
7999.897	2410	2341	2230	169	1204	2339	262	1020
7999.983	2210	2141	2030	169	1404	2539	262	1220
7999.987	2410	2341	2230	169	1404	2539	262	1220

T = Depth

Data Centre Container DCC

Catalogue 33, page 509

Technical data of 10 kW unit:
- Type: RDF – Rittal Direct Free Cooling
- Useful cooling capacity (tA 32°C, RH 40%): 10.0 kW
- Max. outdoor temperature: +40°C
- Min. outdoor temperature: –12°C
- Refrigerant: R134a
- Filter grade: F 7
- Unit dimensions (W x H x D): 760 x 2370 x 420 mm
- Sound pressure level, A-weighted, 5 m from external unit, free field: 45 dB (A)
- Remote operation

R20D model

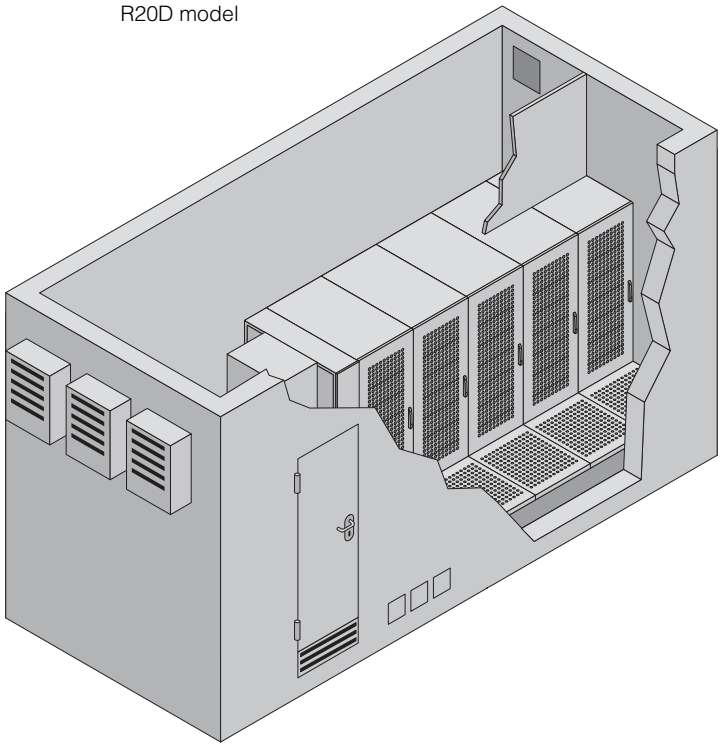

Front view

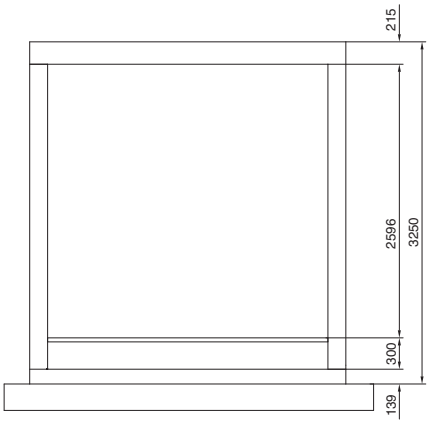

Top view

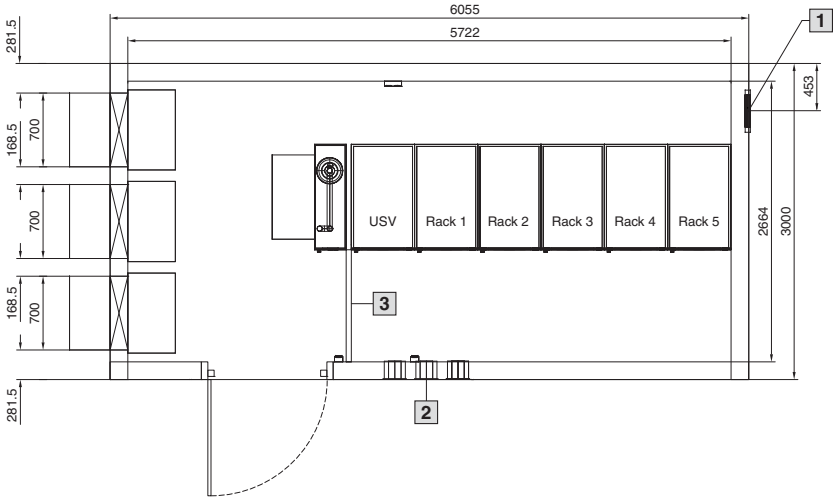

1 Cut-out for pressure relief valve W 400 x H 345 mm

2 Cable ducts

3 Access door to bulkhead area





Rack extinguisher system DET-AC Plus, 1 U

With integral early fire detection

Catalogue 33, page 510

This compact rack extinguisher system DET-AC Plus (Detection Active Plus) is designed for use in the Rittal IT rack, fitted in the 482.6 mm (19˝) level. The system is equipped with a 2-stage smoke extractor system. A bayed rack may optionally be included in the monitoring and extinguisher system. The eco-friendly, non-toxic Novec™ 1) 1230 is used as the extinguisher medium, which means that this extinguisher system is suitable for universal use. Sensitive hardware such as servers, storage and switches are not impaired by the extinguisher medium.
Thanks to the early sensitive detection of smoke, even in racks with a high level of climate control (airflow speed), this ensures that there is plenty of time to forward an alarm message either acoustically, optically via the LC display on the enclosure front, or by connecting the integral floating contacts to the building management system or fire alarm centre and to the Rittal monitoring system CMC. When opening an enclosure door, activation of the extinguisher system is blocked by the two access sensors (door monitoring).
In order to ensure that proper functioning of the system is maintained even in the event of a power failure, an emergency back-up power supply with a stored energy time of 4 hours is integrated into the system.
The system can also be supplied purely as an early fire detection system (EFD Plus) without the extinguisher medium tank.

1) Novec™ is a registered trademark of 3M.

Technical specifications:
DET-AC Plus extinguisher system DK 7338.120
Installation dimensions (W x H x D):
482.6 mm (19˝) x 1 U x 620 mm
Weight: 15 kg (incl. extinguisher and propellant gas cartridge)
Operating temperature: +10°C to +35°C
Protection category: IP 20 to IEC 60 529
Admissible protection volume:
Max. 3 m³ (with sealed enclosures)
Max. DET-AC slave units DK 7338.320 that may be connected: 4
Max. number of enclosures monitored:
5 (volume-dependent)
Extinguisher: 3.2 kg Novec™ 1230
Sensors: 2 scattered-light sensors with different sensitivities
Manual trigger input: Yes
Extinguisher blocking input: Yes, via door contact
Outputs for CMC III (via CAN bus unit 7030.100):
Pre-alarm, fire, collective fault
Emergency power supply (rechargeable battery):
Approx. 4 h
Operating voltage: 100/240 V AC, 50/60 Hz

Technical specifications:
DET-AC Plus early fire detection DK 7338.220
Installation dimensions (W x H x D):
482.6 mm (19˝) x 1 U x 480 mm
Weight: 8 kg
Operating temperature: +10°C to +35°C
Protection category: IP 20 to IEC 60 529
Max. DET-AC slave units DK 7338.300 that may be connected: 5
Max. number of enclosures monitored:
5 (volume-dependent)
Sensors: 2 scattered-light sensors with different sensitivities
Outputs for CMC III (via CAN bus unit 7030.100):
Pre-alarm, main alarm, collective fault
Emergency power supply (rechargeable battery):
Approx. 4 h
Operating voltage: 100/240 V AC, 50/60 Hz

Technical specifications:
DET-AC Plus slave unit DK 7338.320
Installation dimensions (W x H x D):
482.6 mm (19˝) x 1 U x 530 mm
Weight: 17 kg (incl. extinguisher and propellant gas cartridge)
Operating temperature: +10°C to +35°C
Protection category: IP 20 to IEC 60 529
Admissible protection volume:
Max. 3 m³
(with sealed enclosures)
Extinguisher: 2.9 kg Novec™ 1230
Operating voltage: 24 V DC

Early smoke detection:
Thanks to the two highly sensitive optical sensors, minute particles of smoke may be detected even in the early stages of a fire via the active smoke extraction. If the 1st alarm detects smoke aerosols, a pre-alarm is triggered, and if the 2nd alarm likewise detects smoke, the extinguisher system is activated. This prevents major fires from developing.

Rack requirements:
As a general principle, the racks must meet protection category IP 55, i.e. with sealed doors and screw-fastened side panels. Use of an air/water heat exchanger (LCP) is supported. All cable entry areas must be sealed.

Optional smoke analysis, extension for bayed racks:
The basic DET-AC Plus short is designed for a single rack, but neighbouring enclosures may also be incorporated via an additional pipe kit, provided the total interior enclosure volume to be extinguished does not exceed 3 m³. Several extinguisher systems may also be linked together in the bayed enclosure suites, so that all systems may be activated jointly.

Automatic system deactivation (compulsory deactivation):
In conjunction with the Rittal enclosure monitoring system CMC plus suitable switchable Rittal socket strips (Power System Module PSM/Power Control Unit PCU with active current measurement, display and switching options), in the event of an alarm, compulsory deactivation of the components installed in the rack may be triggered. This ensures that the servers are protected from further destruction.

The alarms (pre-alarm, main alarm) may be transmitted via any given IP networks and processed in corresponding monitoring programs. The extinguisher system is supplied complete with mounting accessories.

Rack extinguisher system

Rack extinguisher system DET-AC Plus, 1 U

With integral early fire detection Catalogue 33, page 510

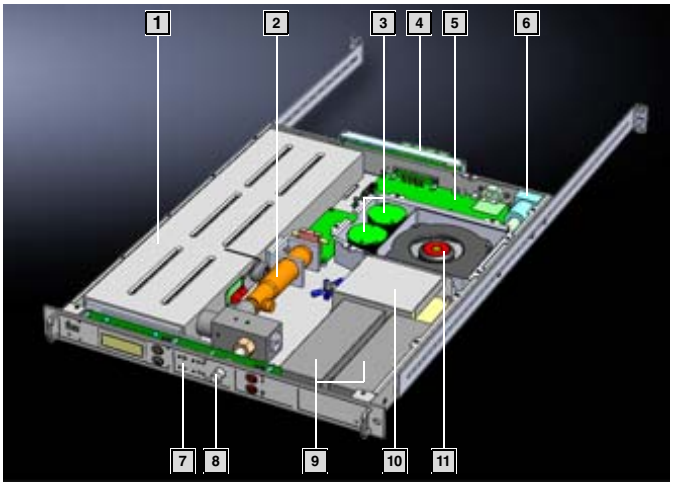

1 Extinguisher tank with fill level monitoring, overpressure fuse and electrical tripping device
2 Propellant gas cartridge
3 Fire sensors
4 Connections for CMC and alarm contacts
5 Mainboard
6 Connections for extractor and waste air pipe
7 Front panel with display and operating panel
8 Extinguisher nozzle
9 Emergency power supply (rechargeable batteries)
10 Power pack
11 Extraction fan

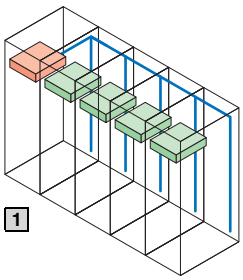

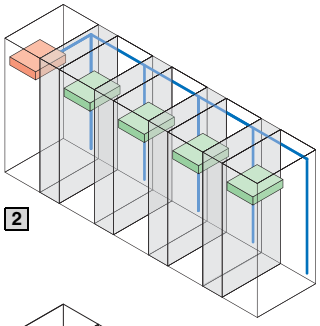

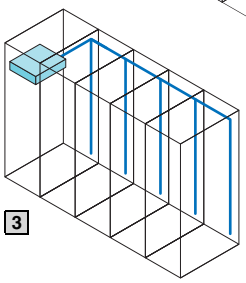

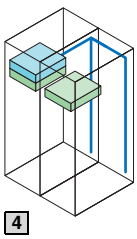

Examples of baying systems

A maximum of 5 bayed enclosures may be detected with one system; the DET-AC Plus short extinguisher system should be used here, and all other enclosures connected to the integral extractor unit using the DET-AC Plus piping kit. Regarding volume, all other enclosures should each be allocated one DET-AC Plus slave unit. The total volume of the bayed enclosure suite must always be taken into account. The bayed enclosures must be consistently interconnected in order to ensure air exchange. All slave units must be connected to the extinguisher system with detection via a bus. This controls simultaneous activation of the extinguisher gas tank.

1 **Extinguishing 5 bayed enclosures:**
One extinguisher system, 4 slave units, one connection cable and 10 access sensors are needed.

2 **Extinguishing 5 bayed enclosures with 4 LCP:**
One extinguisher system, 4 slave units, one connection cable and 18 access sensors are needed.

3 **5 bayed enclosures, detection only, no extinguishing:**
One early fire detection system, 4 piping kits and one connection cable are required.

4 **Extinguishing 2 enclosures with a depth of 800 mm:**
No extinguisher system is used, since the combination of early fire detection and slave units has a smaller depth. One early fire detection system, 2 slave units, one connection cable and 4 access sensors are needed.

Extinguisher system

Slave unit

Early fire detection

Extractor pipes

Note:
The extinguisher system must be installed and maintained by qualified experts. Rittal is happy to offer such a service.
When baying several different IT racks together, a combined enclosure interior volume of 3 m^3 must not be exceeded!

Enclosure interior volume of popular Rittal IT racks

Width mm	Height mm	Depth mm	Enclosure interior volume per rack/m^3
300	2000	1000	0.6
300	2000	1200	0.72
600	2000	1000	1.2
600	2000	1200	1.44
600	2200	1000	1.32
600	2200	1200	1.584
800	2000	1000	1.6
800	2000	1200	1.92
800	2200	1000	1.76
800	2200	1200	2.112

Base/plinth TS

Sheet steel Catalogue 33, page 542

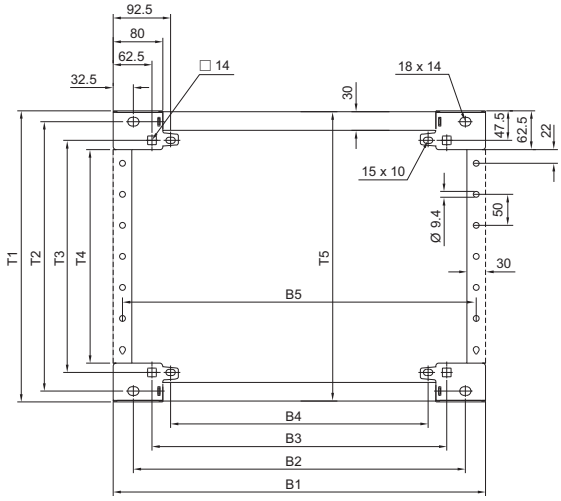

Base/plinth, 100 mm high



Base/plinth, 200 mm high

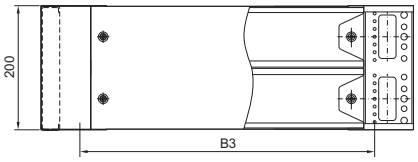

Description of the hole patterns

B1/T1 = External dimensions

B2/T2 = For screw-fastening in the thread of the enclosure corner piece from below

B3/T3 = For screw-fastening with captive nuts to the enclosure base from below or above

All holes (B2 – B4 / T2 – T3) may be used for screw-fastening to the base.

Base/plinth components front/rear					
Width mm	B1	B2	B3	B4	B5
300	300	235	175	115	270
400	400	335	275	215	370
500	500	435	375	315	470
600	600	535	475	415	570
800	800	735	675	615	770
850	850	785	725	665	820
1000	1000	935	875	815	970
1100	1100	1035	975	915	1070
1200	1200	1135	1075	1015	1170
1600	1600	1535	1475	1415	1570

Base/plinth trim panels, side					
Depth mm	T1	T2	T3	T4	T5
300	269	235	175	144	268
400	369	335	275	244	368
500	469	435	375	344	468
600	569	535	475	444	568
800	769	735	675	644	768
900	869	835	775	744	868
1000	969	935	875	844	968
1200	1169	1135	1075	1044	1168

Cable chamber

for TS Catalogue 33, page 545

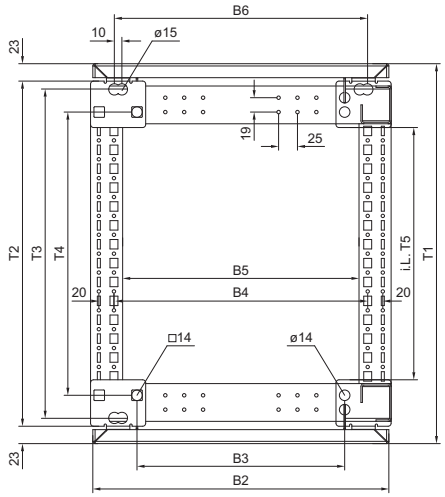

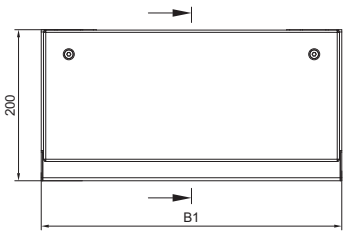

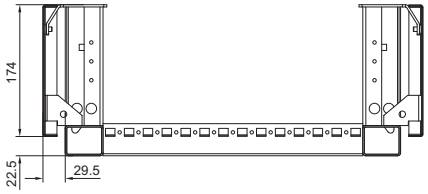

Enclosure width mm	400	600	800	1000	1200
B1	398	598	798	998	1198
B2	392	592	792	992	1192
B3	275	475	675	875	1075
B4	335	535	735	935	1135
B5	312	512	712	912	1112
B6	335	535	735	935	1135
Enclosure depth mm	500	600	800	–	–
T1	503	603	803	–	–
T2	457	557	757	–	–
T3	435	535	735	–	–
T4	375	475	675	–	–
T5	344	444	644	–	–

Base

Base/plinth components, front and rear / Base/plinth trim panels, side

Stainless steel for TS, CM Catalogue 33, page 543/544

100 mm high

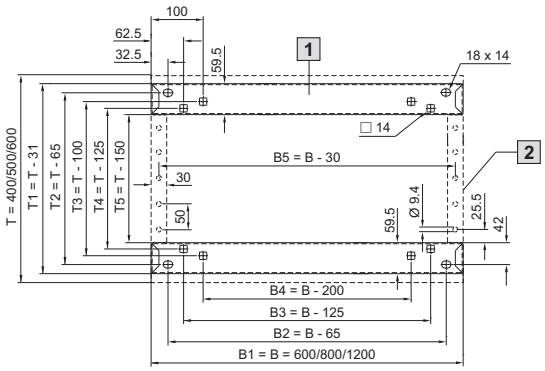

200 mm high

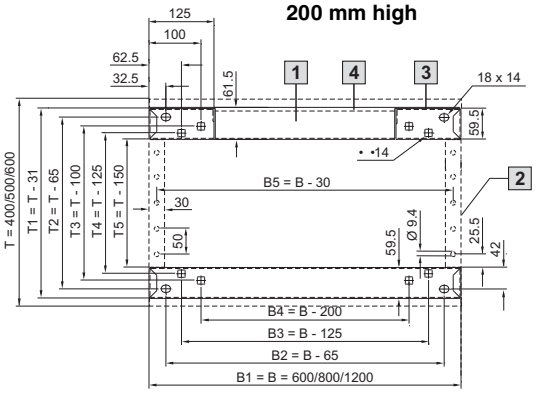

1 Base/plinth components front/rear
2 Base/plinth trim panel, side
3 Base/plinth corner piece
4 Trim panel, removable

B = Width
T = Depth

Description of the hole patterns
B/T = Enclosure dimensions
B1/T1 = External dimensions
B2/T2 = For screw-fastening in the thread of the enclosure corner piece from below
B3/T3 = For screw-fastening with captive nuts to the enclosure base from below or above
All holes (B2 – B4/T2 – T4) may be used for screw-fastening to the base.

Base/plinth, complete

Sheet steel for AE, TP, ES Catalogue 33, page 551

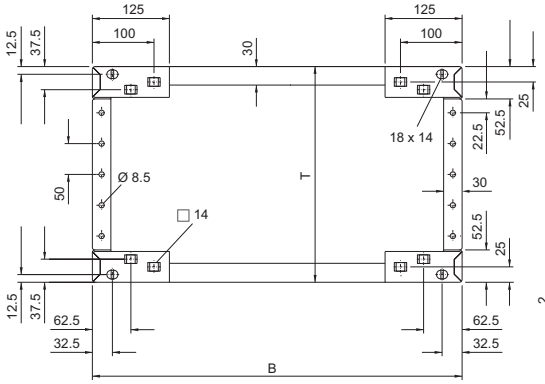

Base/plinth, 100 mm high



Base/plinth, 200 mm high

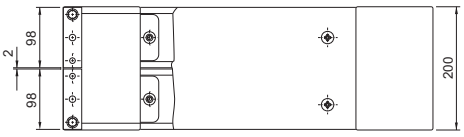

AE

T = Enclosure depth – 21 mm
B = Enclosure width

TP, ES

T = Enclosure depth – 50 mm
B = Enclosure width

Base/plinth, complete

Stainless steel for ES, PC-ES stainless steel, AP stainless steel Catalogue 33, page 552

Base/plinth, 100 mm high

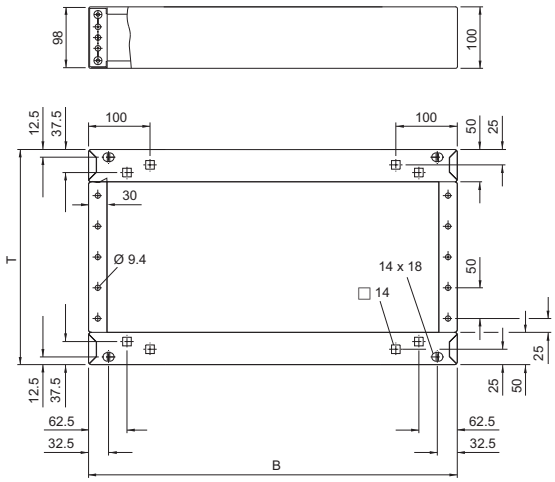

T = Enclosure depth – 50 mm
B = Enclosure width

Base/plinth, 200 mm high

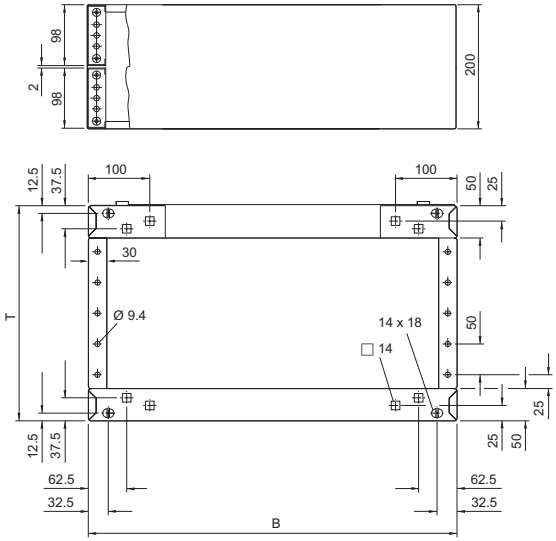

T = Enclosure depth – 50 mm
B = Enclosure width

Cross member

for TS, CM, TP, PC, IW, ES, adjustable Catalogue 33, page 552

TS 8601.450, TS 8601.680

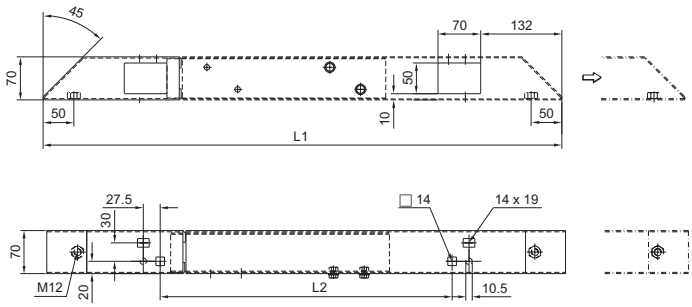

Model No. TS	For enclosure depth mm	L1	L2
8601.450	400	644	275
	500	744	375
8601.680	600	844	475
	800	1044	675

Walls

Module plates

Catalogue 33, page 573

for 16/24-pole connectors

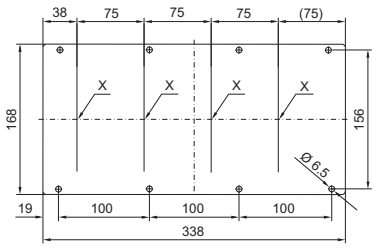

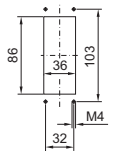

X 16-pole

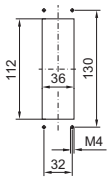

X 24-pole

For cable entry

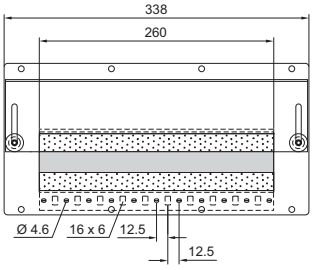

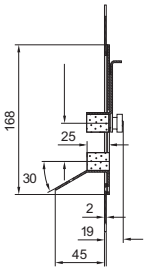

With cable sleeve

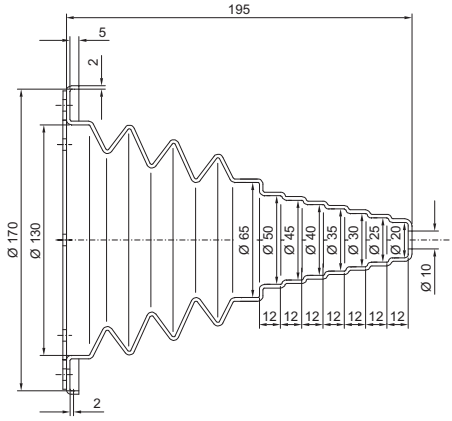

For cable entry grommets

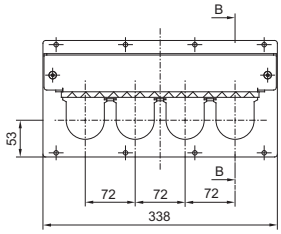

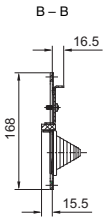

Mounting plates

For KL and KL-HD Catalogue 33, page 631

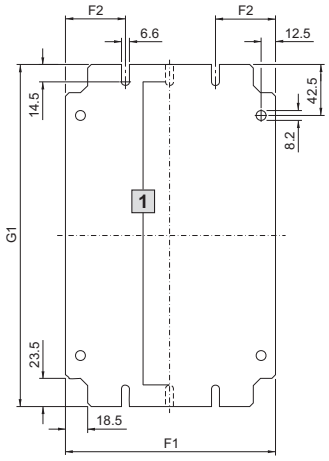

1 Attachment in the centre only for 125 mm wide plates

Model No. KL	For dimensions mm	For Model No. KL and KL-HD	Dimensions in mm		
			G1	F1	F2
1560.700	150 x 150	1500.510, 1514.510, 1521.010, 1527.010, 1670.600, 1671.600	135	125	–
1575.700	200 x 150	1528.510, 1529.510	185	125	–
1561.700	300 x 150	1501.510, 1515.510, 1522.010, 1530.510	285	125	–
1576.700	400 x 150	1589.510	385	125	–
1562.700	200 x 200	1502.510, 1516.510, 1523.010, 1528.010, 1672.600	185	175	50
1563.700	300 x 200	1503.510, 1517.510, 1524.010, 1529.010, 1531.510, 1674.600	285	175	50
1564.700	400 x 200	1504.510, 1518.510, 1525.010, 1532.510, 1675.600	385	175	50
1565.700	500 x 200	1505.510, 1533.510	485	175	50
1566.700	600 x 200	1506.510, 1519.510, 1534.510	585	175	50
1574.700	800 x 200	1527.510, 1542.510	785	175	50
1567.700	300 x 300	1507.510, 1526.010, 1535.510	285	275	50
1568.700	400 x 300	1508.510, 1530.010, 1536.510, 1676.600	385	275	50
1569.700	500 x 300	1509.510, 1537.510	485	275	50
1570.700	600 x 300	1510.510, 1538.510	585	275	50
1571.700	400 x 400	1511.510, 1539.510	385	375	62.5
1572.700	600 x 400	1512.510, 1540.510	585	375	62.5
1573.700	800 x 400	1513.510, 1541.510	785	375	62.5

Baying system

Versatile door and side panel concept

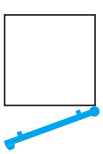

Door with lock



Rear panel



Side panel

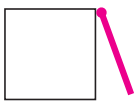

Hinged side panel



Side panel, asymmetrical

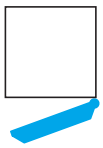

Climate control door



Climate control side panel

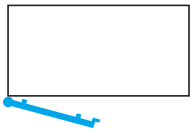

Adjacent door

Please note:

- Red areas (side panels, hinged and unhinged) must always be opposite one another.
- Blue areas (doors/rear panels) must always be opposite one another.

The TS side panel provides new dimensions in convenient access to the TS interior, thanks to the option of hinging.

Only one surface on each vertical enclosure section may be hinged.

Note:
Climate control side panels with integral cooling module may be retrofitted instead of an enclosure side panel, see Cat. 33, page 430.

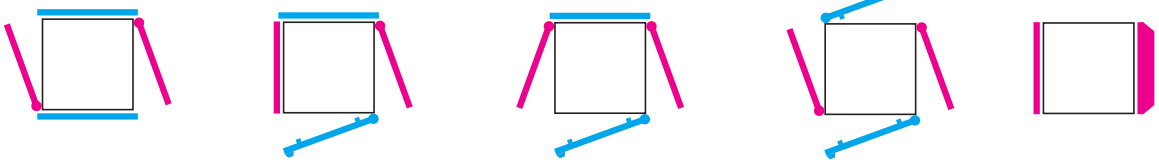

The versatile door and side panel concept also applies to the following baying variants:

. . . infinite possibilities

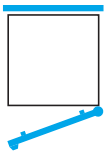

TS 8 standard enclosure

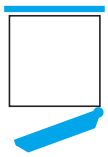

TS 8 standard enclosure with modular climate control concept



TS 8 corner enclosure

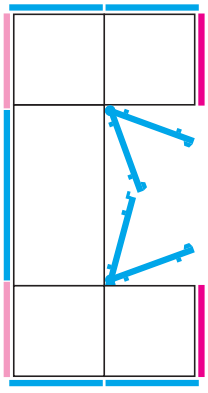

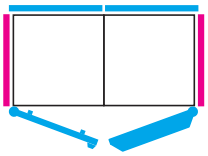

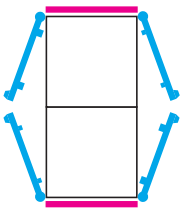

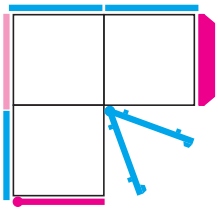

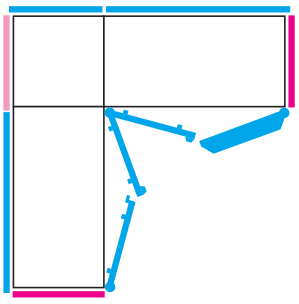

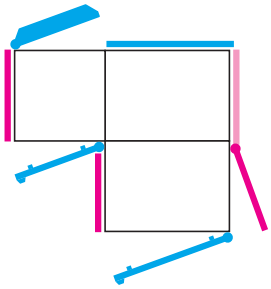

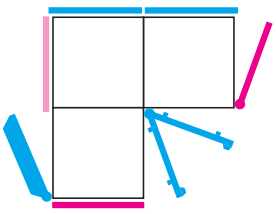

Rail systems – Installation examples TS 8 enclosure system

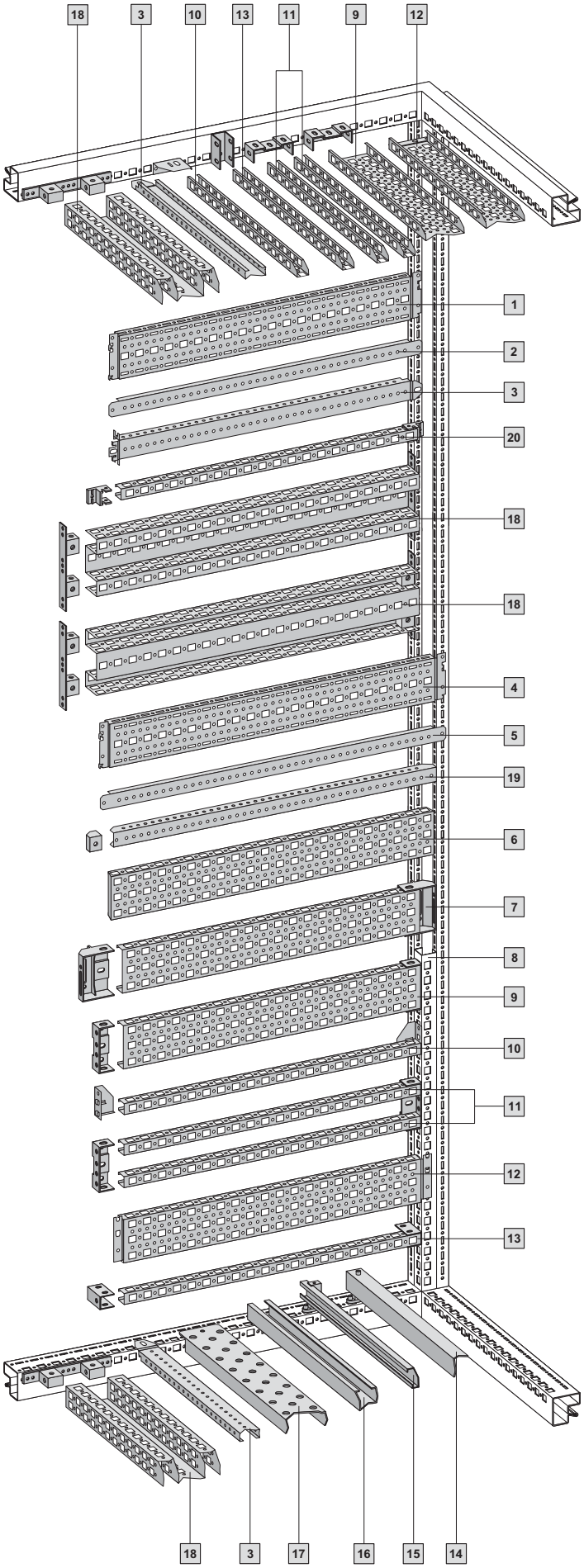

Roof installation

Punched sections and rails may be mounted on the horizontal enclosure sections in both the width and depth.

Installation accessories	Cat. 33, page
1 TS punched section with mounting flange 17 x 73 mm for the outer level	647
2 TS support strip for the outer level	650
3 TS punched rail 18 x 38 mm[1] for the ● outer level ● horizontal enclosure sections ● adaptor rail for PS compatibility	650
4 TS punched section with mounting flange 17 x 73 mm for the inner level	647
5 TS support strip for the inner level	650
6 TS punched section with mounting flange 23 x 73 mm for the inner level	648
7 PS punched section without mounting flange 23 x 73 mm, with support bracket TS (alternatively with one or two punched rails 23 x 23 mm)	652
8 Adaptor rail for PS compatibility	651
9 PS punched section without mounting flange 23 x 73 mm, with support bracket PS	652
10 PS punched rail 23 x 23 mm with angle bracket	651
11 PS punched rails 23 x 23 mm with support bracket PS (alternatively with one or two punched rails 23 x 23 mm)	651
12 PS punched section with mounting flange 23 x 73 mm	652
13 PS punched rail 23 x 23 mm with mounting bracket PS	651
14 Cable clamp rail	717
15 C rails 30/15 with bracket/spacer	653
16 System support rails	654
17 Support rail	654
18 TS punched section without mounting flange, 45 x 88 mm	649
19 TS punched rail 25 x 38 mm with snap-on nut	649
20 PS punched rail 23 x 23 mm with mounting bracket TS	651

[1] Two TS punched rails 18 x 38 mm are included in the supply of enclosures with a mounting plate.
After installing the mounting plate, the TS punched rail may be inserted, as shown here.

Base installation

Punched sections and rails may be mounted on the horizontal enclosure sections in both the width and depth.

Rail systems – Installation examples TS 8 enclosure system

Attachment may be made at any point in the TS 8 enclosure space. Not only with horizontal rail installations directly between the TS sections, but by combining vertical and horizontal rails, any given mounting level in the width, height and depth may be achieved.

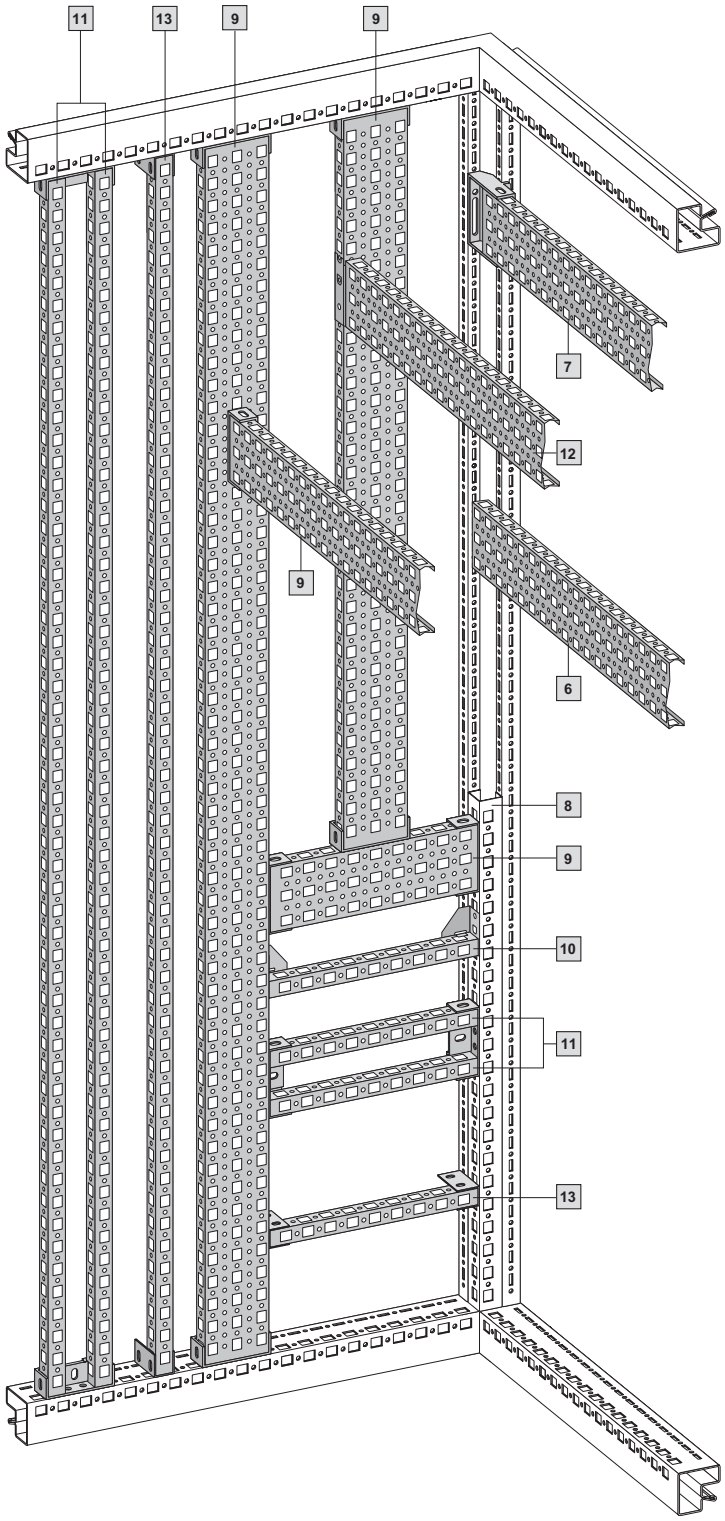

Vertical mounting levels – PS compatible

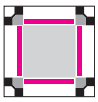

The basis for a second mounting level across the entire enclosure height is quickly achieved, e.g. with two PS punched sections without mounting flanges 23 x 73 mm **9.** Between these two sections, configuration may be achieved with PS punched rails **10, 11** and **13,** with PS punched sections without mounting flanges **9** and PS punched sections with mounting flanges **12.** When using the adaptor rail for PS compatibility **8,** installation is easily achieved across a suitable sub-height, or with suitable enclosure dimensions, across a sub-width or sub-depth.

Installation accessories (Consecutive numbering in accordance with diagram on page 287)	**Cat. 33, page**
6 TS punched section with mounting flange 23 x 73 mm for the inner level	648
7 PS punched section without mounting flange 23 x 73 mm, with support bracket TS (alternatively with one or two punched rails 23 x 23 mm)	652
8 Adaptor rail for PS compatibility	651
9 PS punched section without mounting flange 23 x 73 mm, with support bracket PS	652
10 PS punched rail 23 x 23 mm with angle bracket	651
11 PS punched rails 23 x 23 mm with support bracket PS (alternatively with one or two punched rails 23 x 23 mm)	651
12 PS punched section with mounting flange 23 x 73 mm	652
13 PS punched rail 23 x 23 mm with mounting bracket PS	651

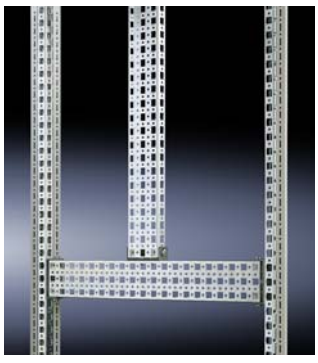

If PS punched rails or PS punched sections without mounting flanges are installed vertically on roof or base frames, a PS rail is also required for horizontal sub-division.

Rail systems – Installation examples TS 8 enclosure system

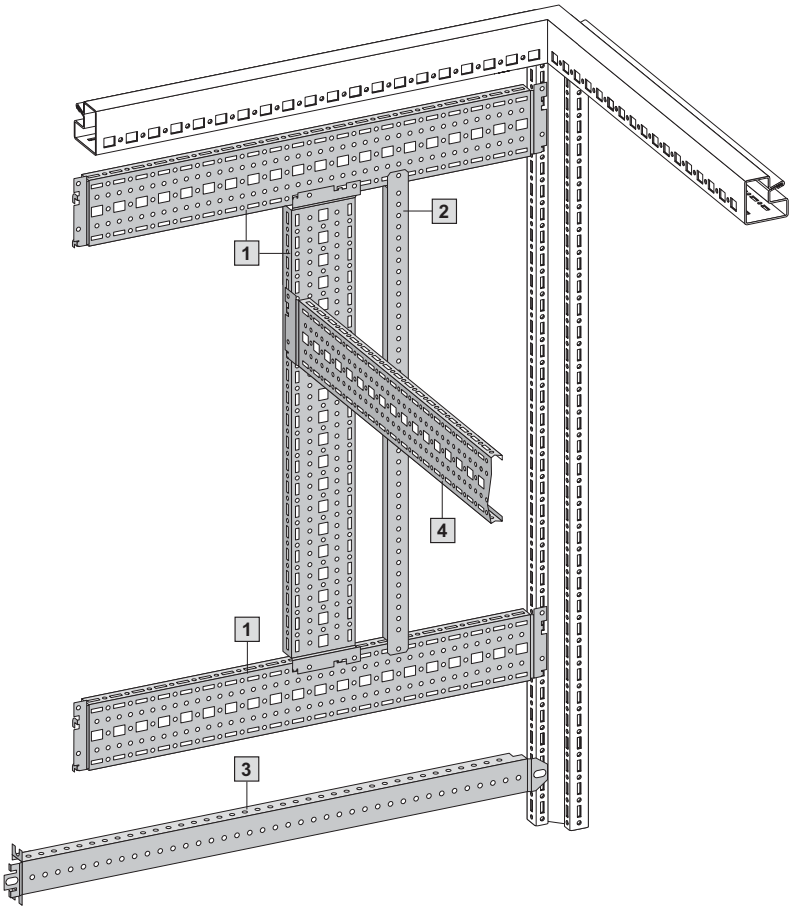

Vertical outer mounting level



Optimum space utilisation and super-fast assembly by mounting the TS punched section with mounting flange directly onto the outer level of the TS 8 vertical section. Simply snap into position and secure!

Installation accessories (Consecutive numbering in accordance with diagram on page 287)	**Cat. 33, page**
1 TS punched section with mounting flange 17 x 73 mm for the outer level	647
2 TS support strip for the outer level	650
3 TS punched rail 18 x 38 mm[1)] for the ● outer level ● horizontal enclosure sections ● adaptor rail for PS compatibility	650
4 TS punched section with mounting flange, 17 x 73 mm for the inner level	647

[1)] Two TS punched rails 18 x 38 mm are included in the supply of enclosures with a mounting plate.
After installing the mounting plate, the TS punched rail may be inserted, as shown here.



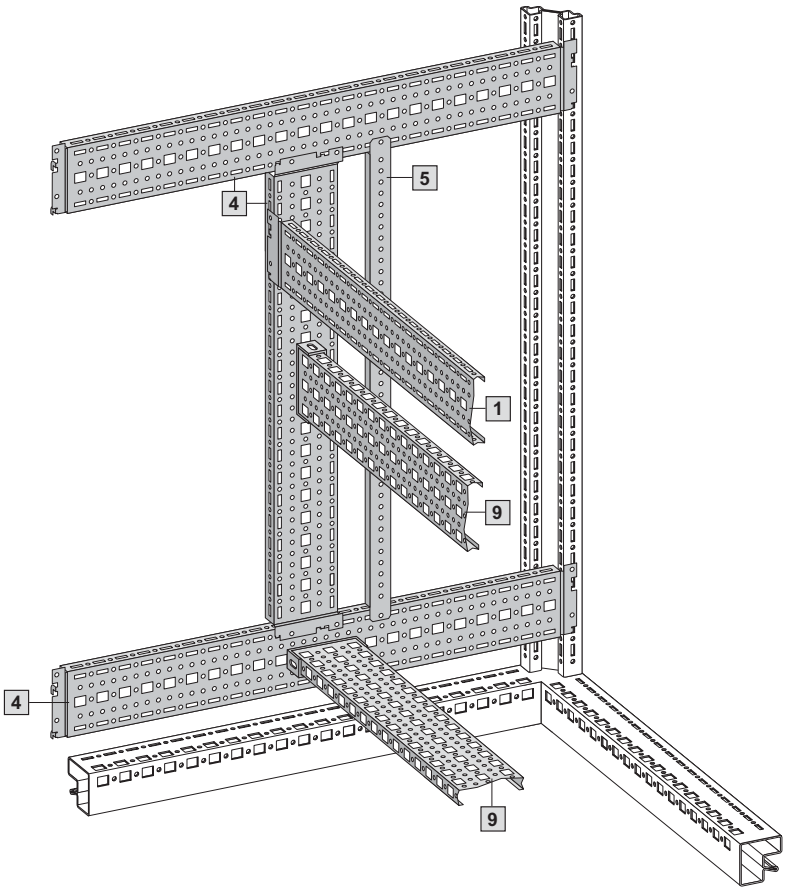

Vertical inner mounting level



Separate utilisation of the inner level of the TS 8 vertical section, irrespective of the outer level, creates additional opportunities. Even in one enclosure, all installation systems may complement one another perfectly for brand new, customer-specific solutions. Infinite possibilities! Simply snap into position, secure, and voila! Super-fast assembly by mounting the TS punched section with mounting flange directly onto the inner level of the TS 8 vertical section.

Installation accessories (Consecutive numbering in accordance with diagram on page 287)	**Cat. 33, page**
1 TS punched section with mounting flange 17 x 73 mm for the outer level	647
4 TS punched section with mounting flange 17 x 23 mm for the inner level	647
5 TS support strip for the inner level	650
9 PS punched section without mounting flange 23 x 73 mm, with support bracket PS	652





Rail systems

Mounting plates

Catalogue 33, page 657/658

Locatable

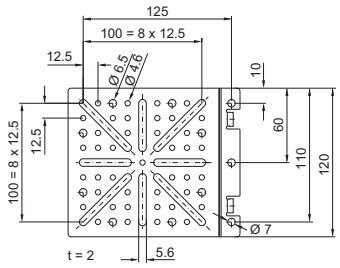

Screw-fastened, large

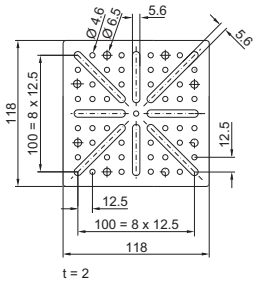

Screw-fastened, small

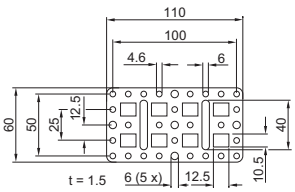

Mounting bracket

Catalogue 33, page 658

For interior installation
PS 4597.000

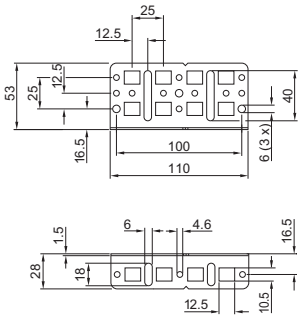

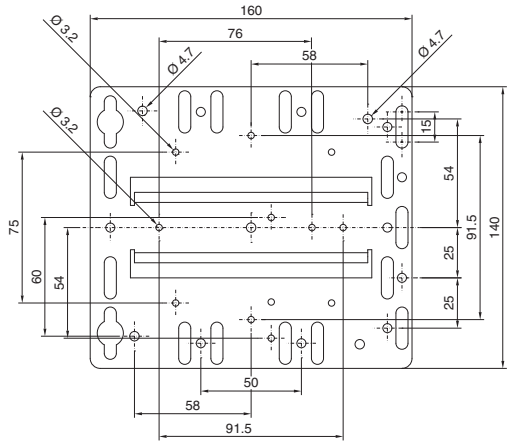

For interior installation
CP 6205.100

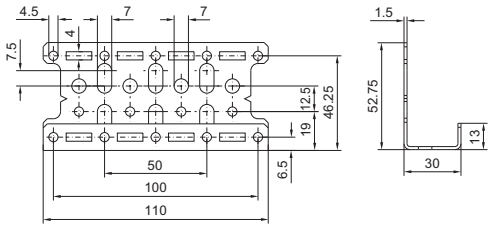

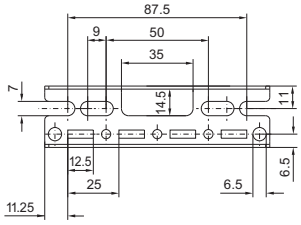

Socket strips

Catalogue 33, page 695

Technical properties depending on variant:

Rocker switch
Illuminated, 2-pole switch.
Master/Slave
2-pole electronic automatic switching unit. The operating point may be set from 9 W to 35 W. Equipment which switches to energy-saving or stand-by mode when switched on cannot be used as the master device. In the ON state, the master device must draw 9 W, and must not draw more than 35 W in the OFF state.
Overvoltage protection
The connected equipment is protected from voltage peaks in the mains. An internal disconnecting device for fire protection irreversibly interrupts the mains infeed in an emergency. This means that the equipment remains protected even if disconnected, but is de-energised.
Type of disconnector:
– Priority of maintaining protection: Yes
– Priority of maintaining function: No
If the equipment is supplied with power and operational when mains voltage is applied, this is in itself indicative of a protected status. The equipment cannot be operated in an unprotected state.

Overvoltage protection device (SPD), type 3
Maximum continuous voltage Uc: 255 V AC
Rated arrester voltage: 280 V
Rated load current IL: 16 A
Maximum overvoltage protection at the mains end: MCB: B16A or 16AgL/gG
Protection level Up: 1.5 kV
Combined surge Uco: 10 kV
Arrester disconnector: Permanently disconnects SPD and equipment from the mains.
Overvoltage protection and interference suppression filter, with RJ 10 connector for CMC connection
With the relay message contact, undervoltage and failures caused by overvoltage can be reported in the network via the CMC via SNMP trap.
Relay alarm output: RJ 10 jack
Load capacity of relay: 50 V DC, 100 mA
Circuit-breaker
Protects cables from short-circuit and overload. 2-pole switching (thermal/magnetic).
Tripping characteristic B16
MCB: IEC 60898-1, DIN EN 60898-1, VDE 0641-11
UPS strip
With red socket strip inserts.
Connection cable with IEC 320 connector.
Cable: H05VV-F3G1.0/rated current: 10 A.
2 circuits
Two circuits with two separate connection cables, 2.5 m.

RCCB protection
For personal protection. With residual-current circuit-breaker IΔn 30 mA to RC: EN 61008, IEC 61008.
RCBO protection
A combination of personal, overload and short-circuit protection. With residual-current circuit-breaker IΔn 30 mA to RCBO: EN 61009, IEC 61009.
Version B/F (Belgium/France)
With 7 or 12 sockets to CEE 7-V UTE, with child-proof system.
IEC 320 connector
Standard E IEC 320,
Built-in IEC 320 socket
Standard F IEC 320,
DIN standard for both: up to 70°C,
DIN EN 60 320-2-2,
DIN EN 60 320-1,
DIN EN 60 320-1.
connection cable, 2 metres or IEC 320 input in the connector panel.
Cable: H05VV-F3G1.0/rated current: 10 A.

DK 7240.110

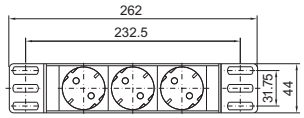

DK 7240.120

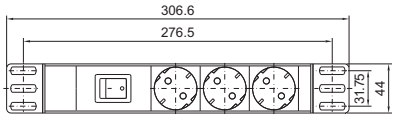

DK 7240.200 – DK 7240.290

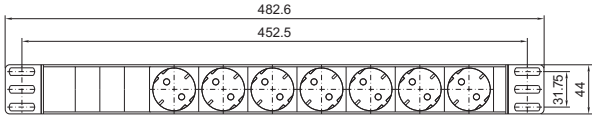

DK 7240.370

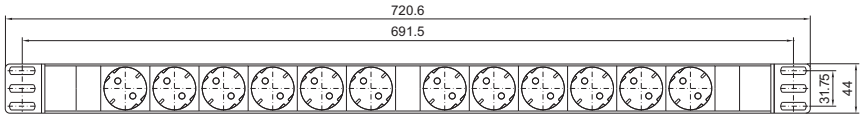

DK 7240.200

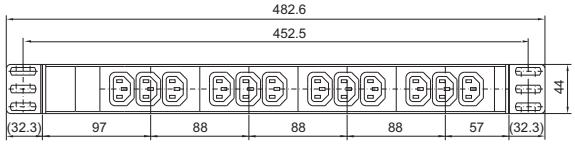

DK 7240.201

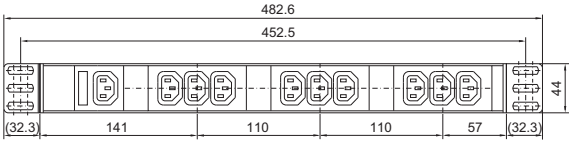

DK 7240.205

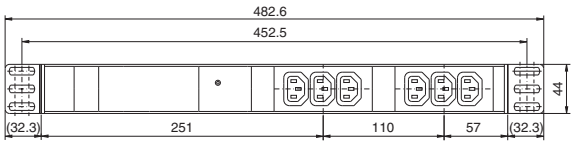

DK 7240.510

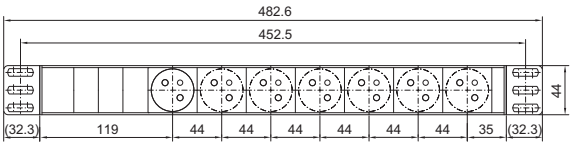

Power supply

Socket strips

With C13/19 sockets Catalogue 33, page 696

DK 7240.130

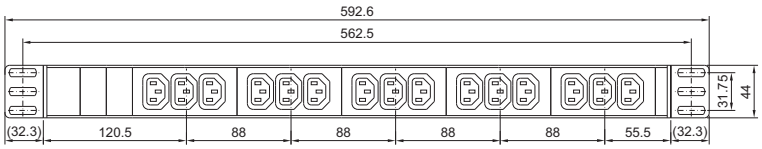

DK 7240.150

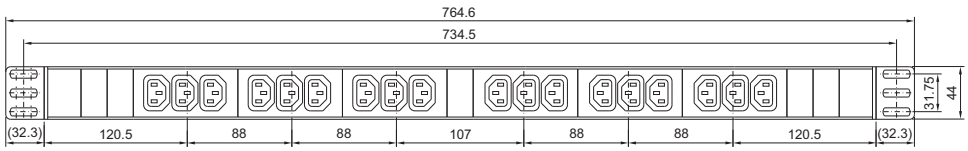

DK 7240.160

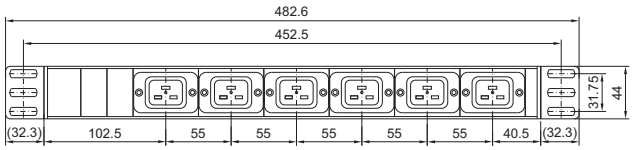

DK 7240.170

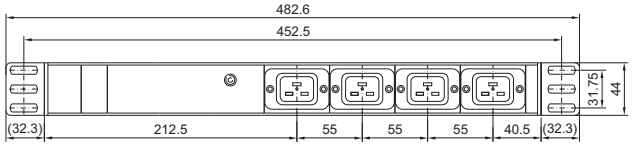

DK 7240.190

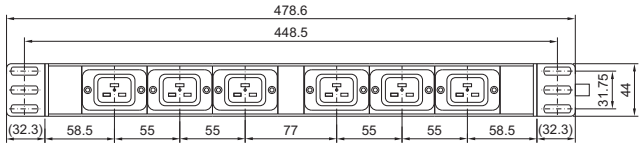

Swing frame, small

Catalogue 33, page 733

For 600 mm wide enclosures

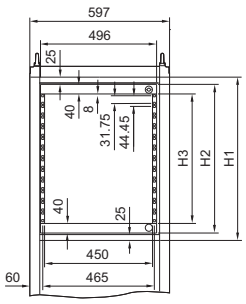

For 800 mm wide enclosures
optionally at the side or in the centre

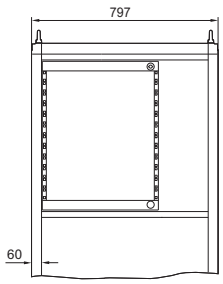

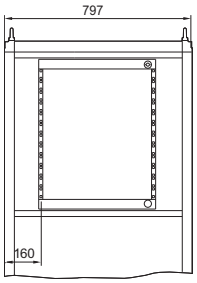

Height units	3 U	6 U	9 U	12 U	15 U	18 U
Model No. SR	**2377.030**	**2377.060**	**2377.090**	**2377.120**	**2377.150**	**2377.180**
H1 mm	275	408	541	675	808	941
H2 mm	217	350	483	617	750	883
H3 mm	137	270	403	537	670	803

Installation depth T max. = mm with dimension D[1] of at least 45 mm			
Enclosure width mm	600	800	800
	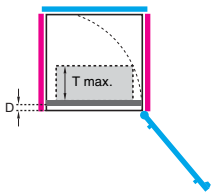	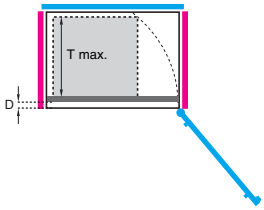	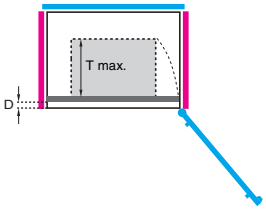
Installation	central	side	central
Enclosure depth mm	T max.	T max.	T max.
400	185	310	310
500	185	410	370
≥ 600	185	500	370

[1] D = Distance from the inner edge of the door to the front edge of the swing frame may be installed deeper on a 25 mm pitch pattern.

482.6 mm (19˝) installation system

Examples for TS

Partial installation with 600 and 800 mm wide enclosures, each in the uppermost or lowest position.

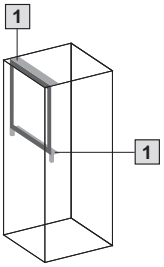

At the front

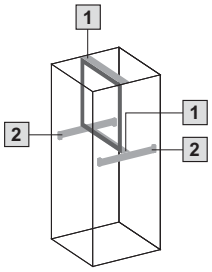

Set back

Partial installation, centre
in 600 and 800 mm wide enclosures.

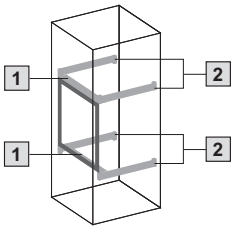

At the front

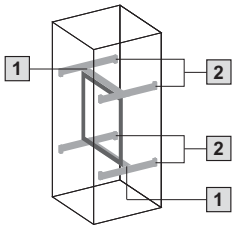

Set back

1 Installation kit for swing frame, small.

2 PS punched sections without mounting flanges 23 x 73 mm to match the enclosure depth in conjunction with 4 support brackets TS 8800.330 (two are included with the supply of the installation kit).

Note:
Height compensation between the 25 mm pitch pattern of holes in the enclosure and the height units of the swing frame is achieved by the support brackets TS (two are included with the supply of the installation kit).

Side installation
With an enclosure depth of 600 or 800 mm, side installation of a small swing frame is identical to installation parallel to the front.
For access to the swing frame we recommend the hinges for the TS side panel, see Catalogue 33, page 569.

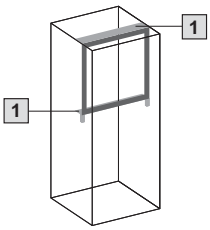

Vario swing frame

Catalogue 33, page 734

Installation examples

Mounting accessories according to the installation position (swing frame in topmost position)

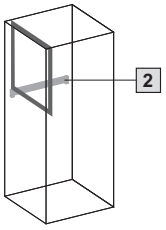

At the front

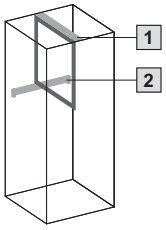

Set back

Mounting accessories according to the installation position (swing frame offset downwards)

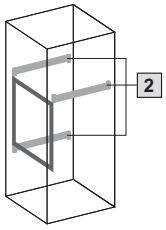

At the front

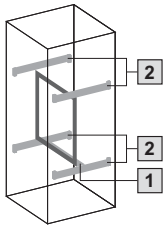

Set back

1 PS punched section with mounting flange for enclosure width 800 mm, see Catalogue 33, page 652.

2 PS punched section with mounting flange in accordance with the enclosure depth, see Catalogue 33, page 652.

For 800 mm wide enclosures

Height units		6 U	12 U	18 U
Model No. SR		**2004.235**	**2008.235**	**2011.235**
H1 mm		350	616.5	883
H2 mm		270	536.5	803
Max. installation depth with enclosure depth	400 mm	305 mm		
	500 mm	405 mm		
Dimension D mm		41.5 – 59.5 – 77.5 – 116.5 – 134.5 – 141.5 – 159.5		

Accessories:

47 mm lock inserts, version D, see Catalogue 33, page 609.

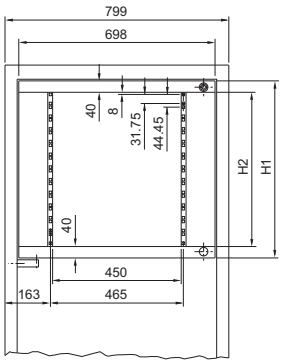

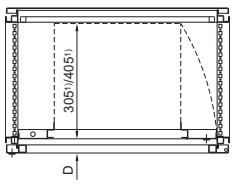

1) At D 41.5 mm

482.6 mm (19˝) installation system

Swing frame, large

Without trim panel, for 600 mm and 1200 mm wide enclosures Catalogue 33, page 735

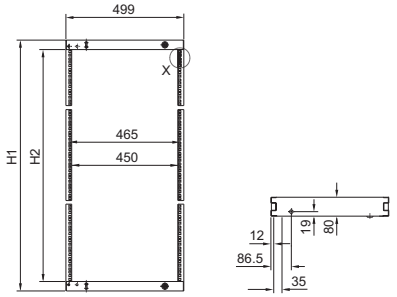

Cut-out “X”

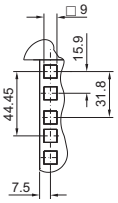

Height units	22 U	31 U	36 U	40 U	45 U
Model No. SR	**2322.700**	**2331.700**	**2336.700**	**2340.700**	**2345.700**
For enclosure height mm (or higher)	1200	1600	1800	2000	2200
H1 mm	1061.5	1461.5	1684.5	1861.5	2084.0
H2 mm	981.5	1381.5	1604.0	1781.5	2004.0

Installation depth T max. = mm with dimension D[1] of at least 49 mm			
Enclosure width mm	600	1200	1200
	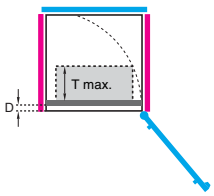	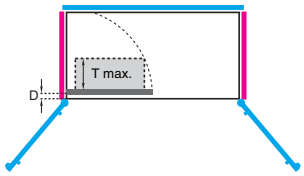	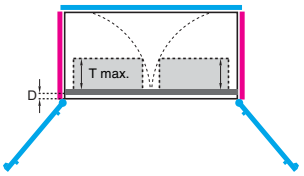
Installation	central	left or right	left and right
Enclosure depth mm 400 500 600 800	T max. 185 185 185 185	T max. 295 395 495 695	T max. 295 365 365 365

[1] D = Distance from the inner edge of the door to the front edge of the swing frame may be installed deeper on a 25 mm pitch pattern.

13 examples for TS

Full installation

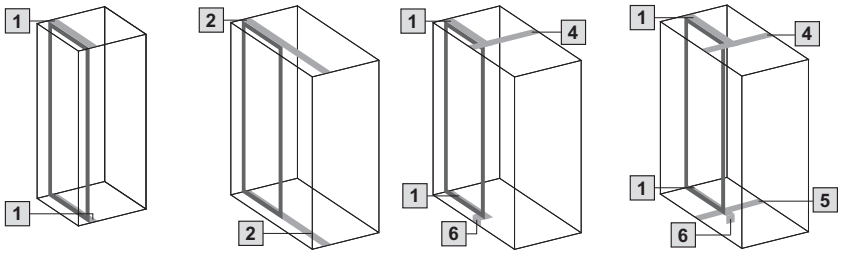

600 mm front | 1200 mm front | 1200 mm front with width divider | 1200 mm set back with width divider

Partial installation, top

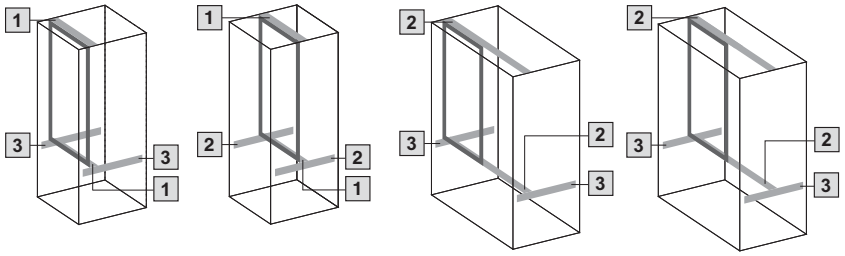

600 mm front | 600 mm set back | 1200 mm front | 1200 mm set back

Partial installation, centre

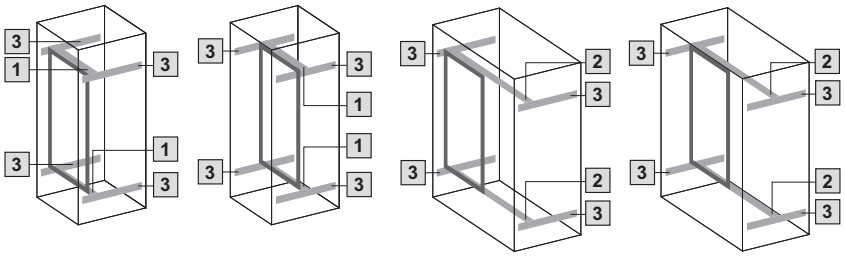

600 mm front | 600 mm set back | 1200 mm front | 1200 mm set back

1 Installation kit for 600 mm wide enclosures

2 Installation kit for 1200 mm wide enclosures

3 TS punched section with mounting flange 23 x 73 mm for the inner mounting level in the respective enclosure depth, for installation in ES = PS punched sections with mounting flanges

4 PS punched section without mounting flange in the respective enclosure depth in conjunction with support bracket PS

5 TS punched rail 18 x 38 mm in the corresponding enclosure depth[1)]

6 Width divider (left-hand or right-hand angle)[1)]

[1)] Not possible with ES, CM.

Notes:

- Height compensation between the 25 mm pitch pattern of holes in the enclosure and the height units of the swing frame is achieved by the upper installation kit.
- Partial installation at the bottom matches partial installation at the top.
- CM only supports full installation at the front.

Side installation
With an enclosure depth of 600 mm, side installation of a large swing frame is identical to installation parallel to the front. For access to the swing frame we recommend the hinges for the TS side panel, see Catalogue 33, page 569.

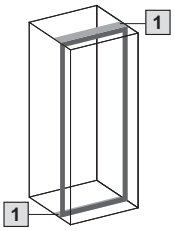

482.6 mm (19˝) installation system

Swing frame, large

With trim panel, for 800 mm wide enclosures Catalogue 33, page 736

Equipment at sides

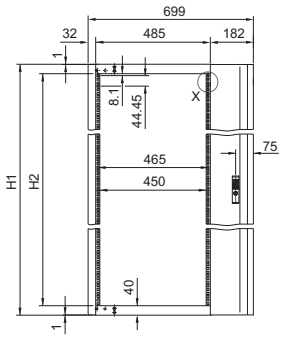

Cut-out “X”

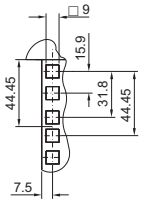

Equipment in centre

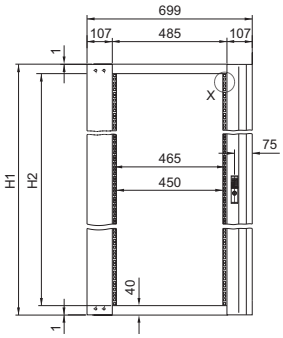

Note:
If the enclosure height is not fully utilised by the swing frame, additional mounting accessories – see Catalogue 33, page 736 – will be required.
For two-door enclosures with height 1800 and 2200 mm the next-smallest swing frame must be installed, due to collision with the lock.

Height units	22 U		31 U		36 U		40 U		45 U	
Trim panel	side	central	side	central	side	central	side	central	side	central
Model No. SR RAL 7035	**2323.235**	**2324.235**	**2332.235**	**–**	**2337.235**	**2338.235**	**2341.235**	**2342.235**	**2346.235**	**2347.235**
For enclosure height mm (or higher)	1200		1600		1800		2000		2200	
H1 mm	1061.5		1461.5		1684.5		1861.5		2084.0	
H2 mm	981.5		1381.5		1604.0		1781.5		2004.0	

Installation depth T max. = mm with dimension D[1] of at least 49 mm with 130° hinge, 95 mm with 180° hinge			
Enclosure width mm	800		
	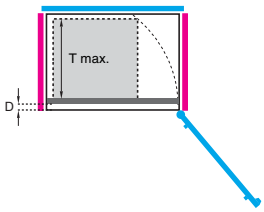		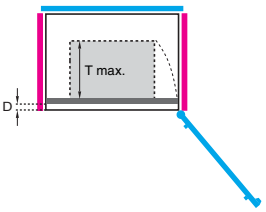
Installation	side		central
Hinge	130°	180°	180°
Enclosure depth mm 400 500 600 800	T max. 295 395 470 470	T max. 252 352 428 428	T max. 252 345 345 345

[1] D = Distance from the inner edge of the door to the front edge of the swing frame may be installed deeper on a 25 mm pitch pattern.

7 examples for TS

Full installation

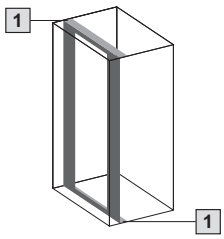

800 mm
front

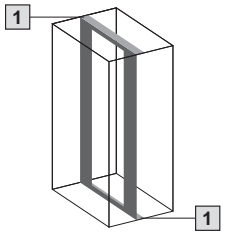

800 mm
set back

Partial installation, top

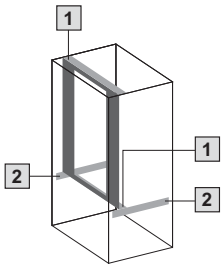

800 mm
front

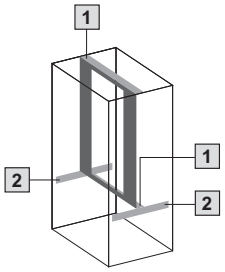

800 mm
set back

Partial installation, centre

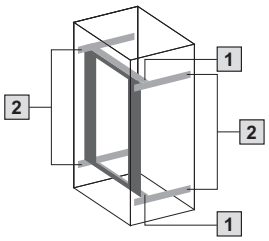

800 mm
front

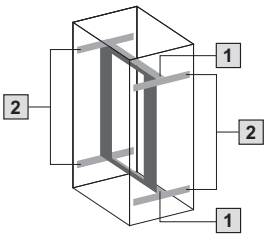

800 mm
set back

1 Installation kit for 800 mm wide enclosures

2 TS punched section with mounting flange 23 x 73 mm for the inner mounting level corresponding to the enclosure depth, for installation in ES = PS punched sections with mounting flanges

Notes:

- Height compensation between the 25 mm pitch pattern of holes in the enclosure and the height units of the swing frame is achieved by the upper installation kit.
- Partial installation at the bottom matches partial installation at the top.
- CM only supports full installation at the front.

Side installation

With an enclosure depth of 800 mm, side installation of a large swing frame is identical to installation parallel to the front.
For access to the swing frame we recommend the hinges for the TS side panel,
see Catalogue 33, page 569.

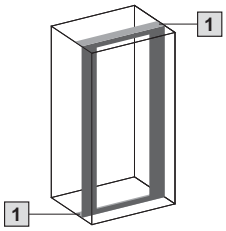

482.6 mm (19˝) installation system

Compact swing frame

For AE Catalogue 33, page 737

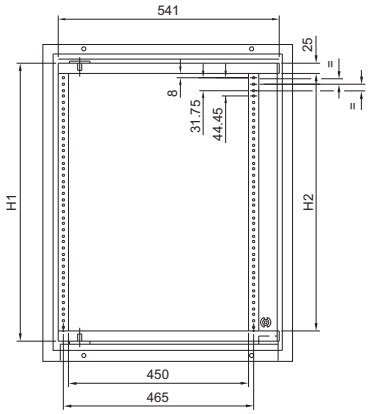

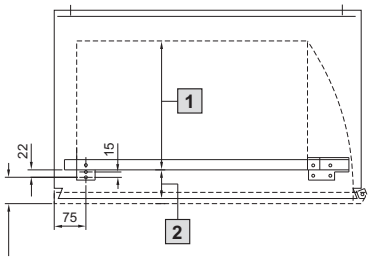

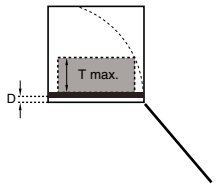

1 T = max. installation depth (see table)

2 D = 38 (53, 68, 83)

For AE

For compact enclosure AE			Height units	6 U	11 U	14 U
Enclosure		Max. installation depth (T max.) mm	**Model No. SR**	**2026.200**	**2027.200**	**2034.200**
Width mm	Depth mm		For enclosure height mm	380	600	760
			H1 (mm)	320	542	676
			H2 (mm)	270	492	626
600	210	145	Spray-finished	1039.500	1060.500	1076.500
			Stainless steel	1009.600	1010.600	1012.600
600	350	265	Spray-finished	1339.500	1360.500	1376.500
760	210	145	Spray-finished	–	–	1077.500
760	300	235	Spray-finished	–	–	1073.500
			Stainless steel	–	–	1014.600

Connection examples – KVM switches

Connection example SSC view 8 USB

Catalogue 33, page 781
(behind monitor/keyboard unit, 1 U)
Compact switching for up to 8 servers.

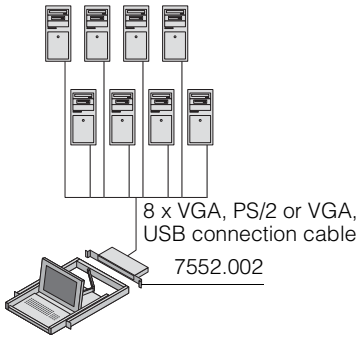

Connection example SSC view 32 Cat

Catalogue 33, page 781
(behind monitor/keyboard unit, 1 U) administer 32 servers in 1 U.
The most powerful 1 U console/switch solution.

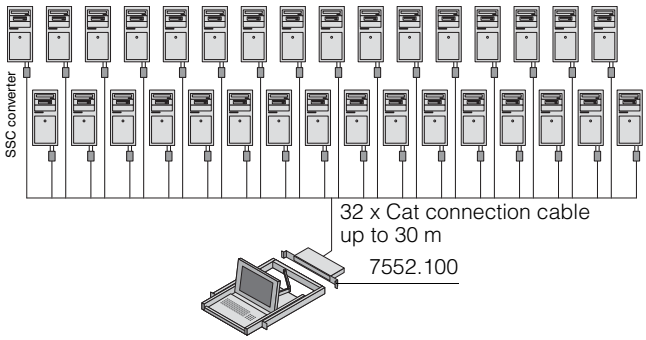

Connection example SSC compact 32 Cat

Catalogue 33, page 781
1 user KVM solution for 32 servers.
Extendible up to a maximum of 125 connected servers.

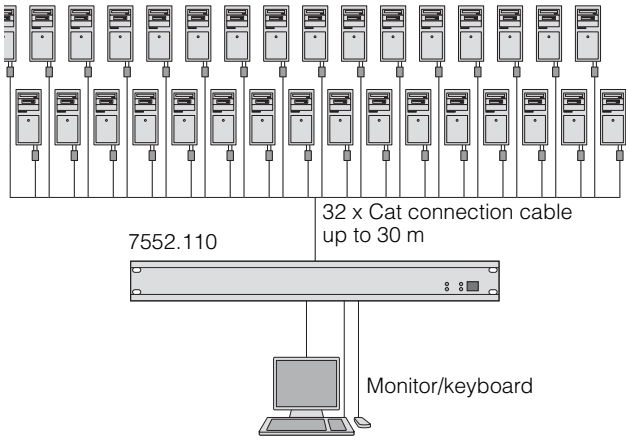

Connection example SSC premium 8/32

Catalogue 33, page 781
Modular KVM for data centres. Up to 8 users may access the connected servers in parallel and independently from one another. Remote access via “KVM over IP” is also supported. Furthermore, the Rittal sockets may also be switched via the OSD of the SSC premium. This facilitates a “hard-reboot” of the servers from anywhere in the world.

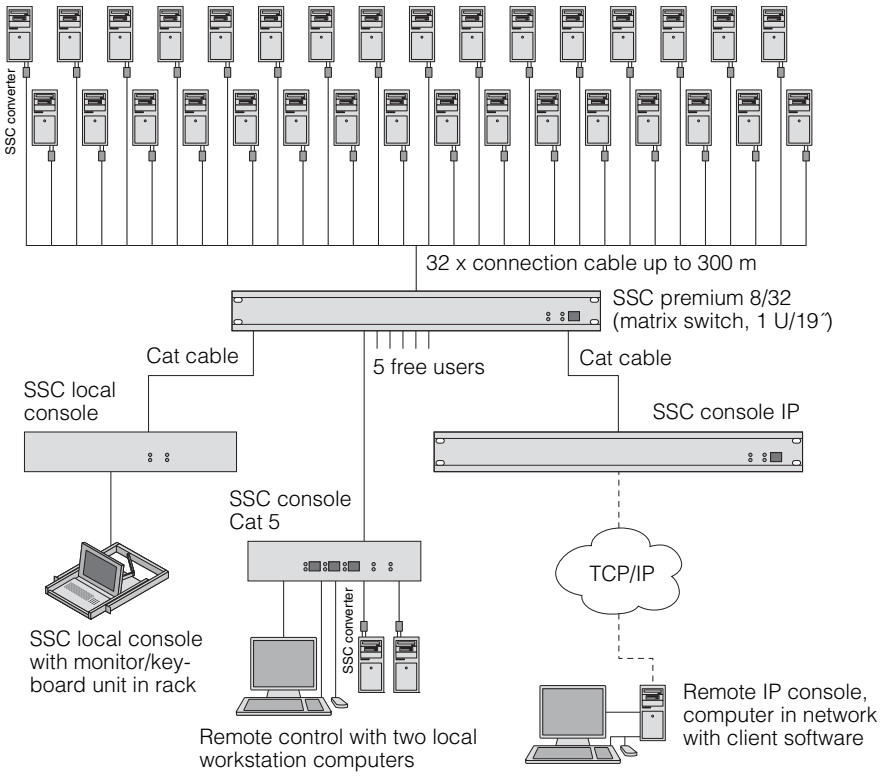

Monitors

TFT holder, vertically hinged

Catalogue 33, page 797

Side view, installed state

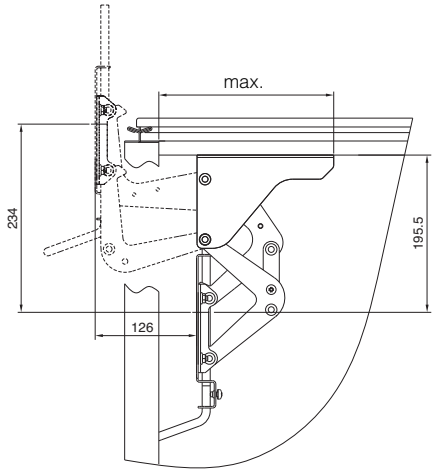

Top view from above

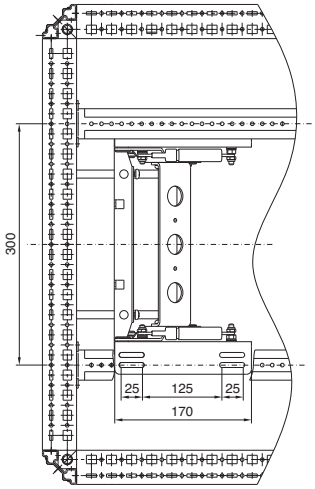

Front view

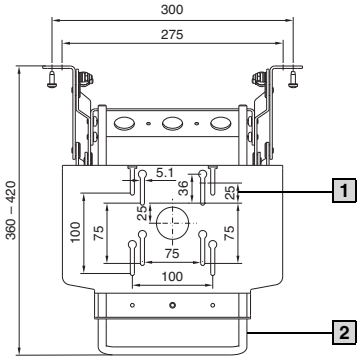

1 Monitor height adjustment range
2 Actuator handle

TFT holder

Catalogue 33, page 797

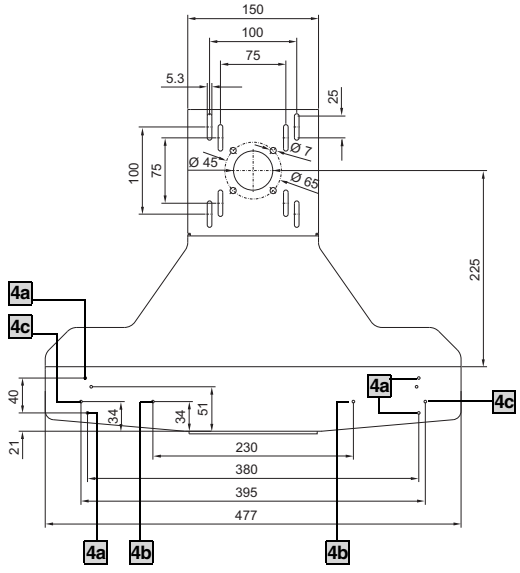

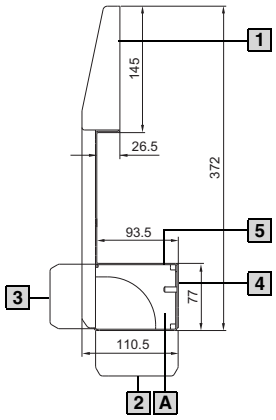

View A

Mounting cut-out
CP-S

Mounting cut-out
CP-L ▭ 120 x 65 mm

1
- VESA 75 or 100 rigid
- VESA 75 and tilt adjustment via IW 6902.670 (see Catalogue 33, page 167)

2
- Enclosure attachment/housing coupling with support arm connection
- CP-S, see Catalogue 33, page 151
- CP-L ▭ 120 x 65 mm

3
- Enclosure attachments on the horizontal support arm CP-S or CP-L ▭ 120 x 65 mm, for mounting on the vertical support arm via tilt adjuster IW 6902.670
- CP-L ▭ 120 x 65 mm, see Catalogue 33, page 155

4

4a Support for keyboards SM 2383.000 (see Catalogue 33, page 800) via enclosure surface connector SM 2383.010 (see Catalogue 33, page 793)

4b U handle CP 6107.100 (see Catalogue 33, page 792)

4c U handle CP 6107.200 (see Catalogue 33, page 792)

via marked points

5
- Connector gland SZ 2400.300/.500 (see Catalogue 33, page 714) as strain relief for the connection cable

Rittal – The System.

Faster – better – worldwide.

Innovations 2012 – Technical details

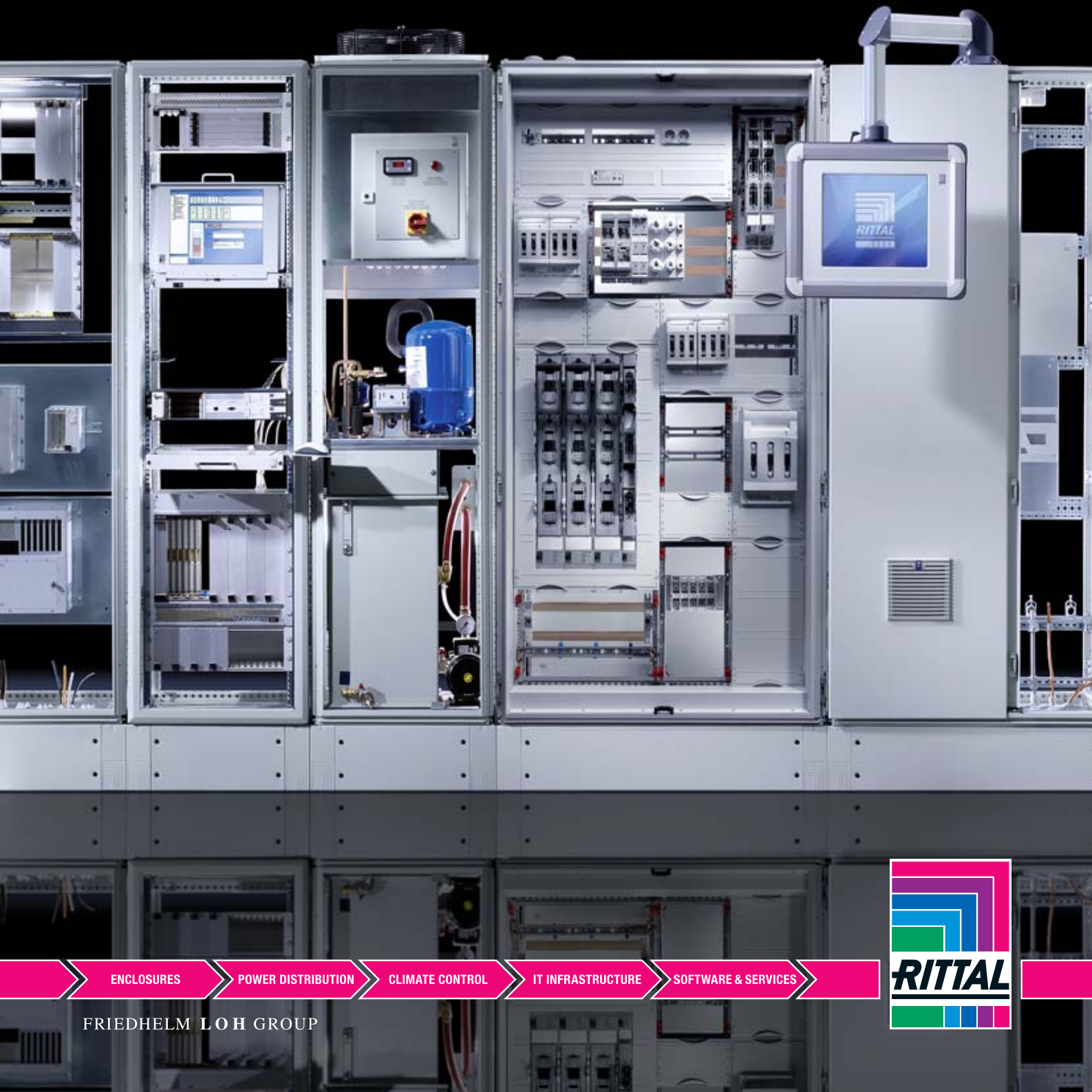

ENCLOSURES | POWER DISTRIBUTION | CLIMATE CONTROL | IT INFRASTRUCTURE | SOFTWARE & SERVICES

RITTAL

FRIEDHELM LOH GROUP

Network/server enclosures TS IT

With glazed door for rack climate control

Width 600 mm Innovations 2012, page 13

Front view

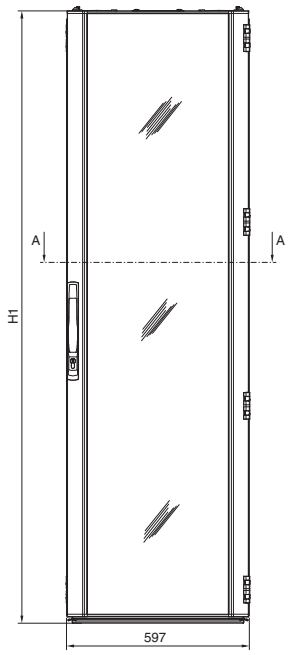

Side view

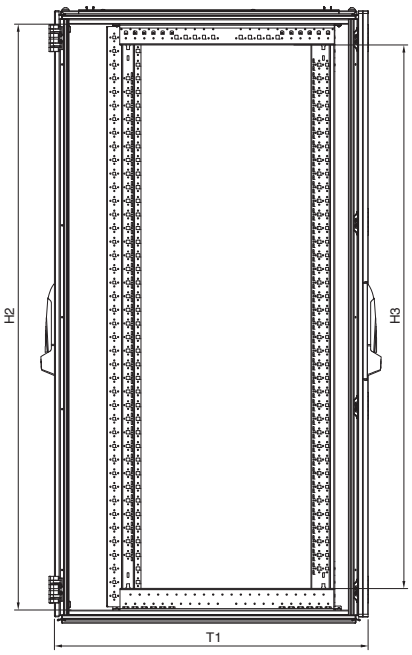

Rear view

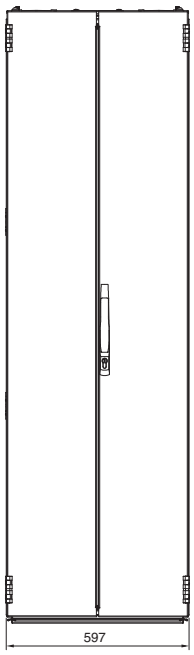

Section A – A

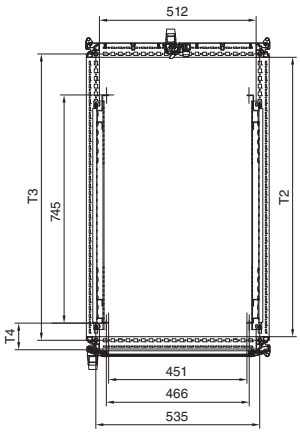

Top view

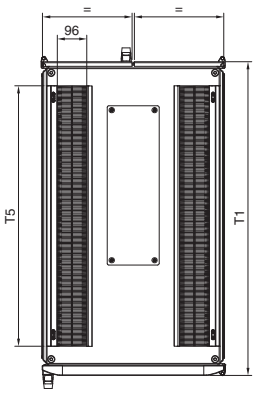

Model No. DK	U	Height dimensions mm			Depth dimensions mm				
		H1	H2	H3	T1	T2	T3	T4	T5
5508.120	42	1998.5	1912	1774	1024	912	935	87	850
5510.120	42	1998.5	1912	1774	1224	1112	1135	147	1050

With glazed door for rack climate control

Width 800 mm Innovations 2012, page 12/13

Front view

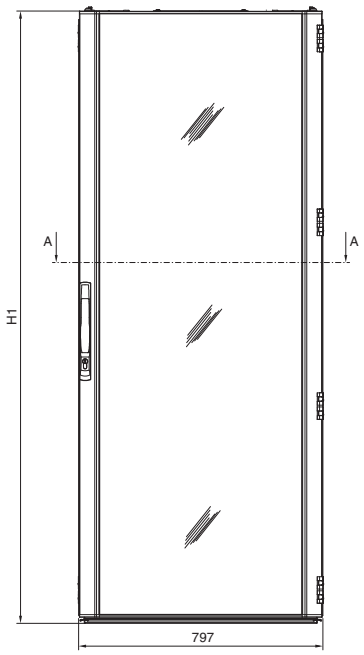

Side view

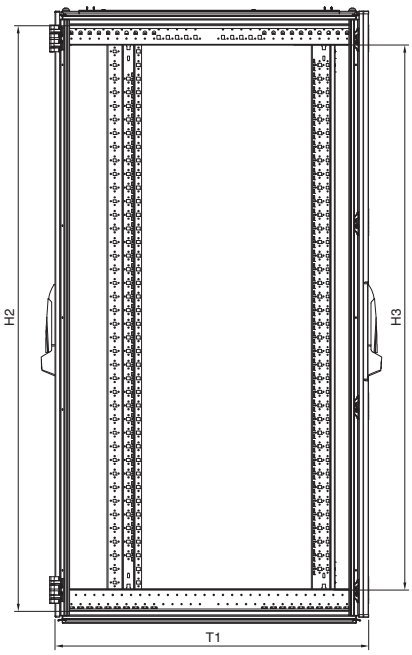

Rear view

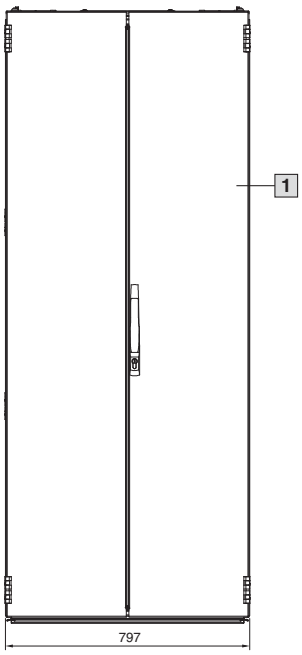

Section A – A

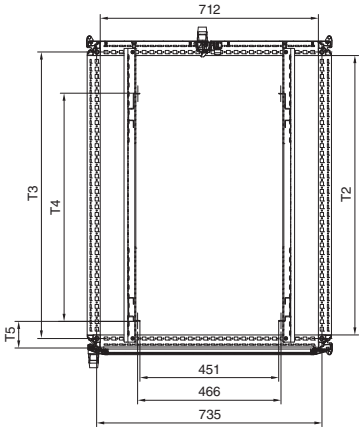

Top view

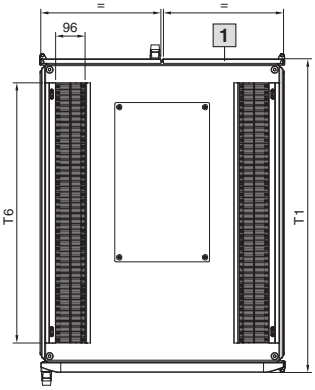

1 For height 1200 mm with one-piece door.

Top view depth 600 mm

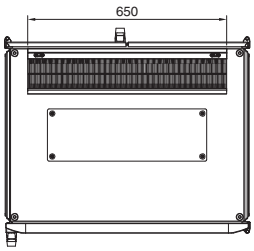

Model No. DK	U	Height dimensions mm			Depth dimensions mm					
		H1	H2	H3	T1	T2	T3	T4	T5	T6
5503.120	24	1198.5	1112	974	824	712	735	545	147	650
5504.120	24	1198.5	1112	974	1024	912	935	745	87	850
5505.120	38	1798.5	1712	1574	824	712	735	545	147	650
5506.120	42	1998.5	1912	1774	624	512	535	445	87	650
5507.120	42	1998.5	1912	1774	824	712	735	545	147	650
5509.120	42	1998.5	1912	1774	1024	912	935	745	87	850
5511.120	42	1998.5	1912	1774	1224	1112	1135	745	87	1050
5512.120	47	2198.5	2112	1974	824	712	735	545	147	650

Network/server enclosures TS IT

With vented door for rack climate control

Width 600 mm Innovations 2012, page 14/15

Front view

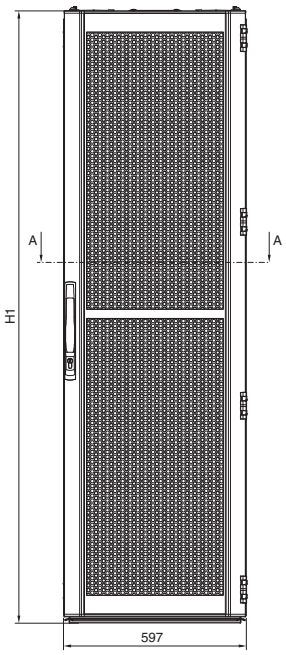

Side view

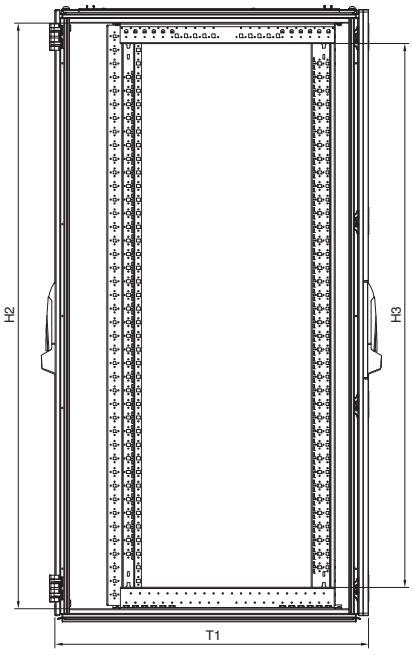

Rear view

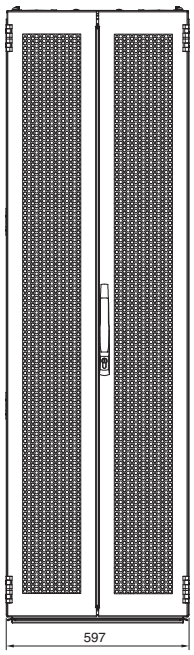

Section A – A

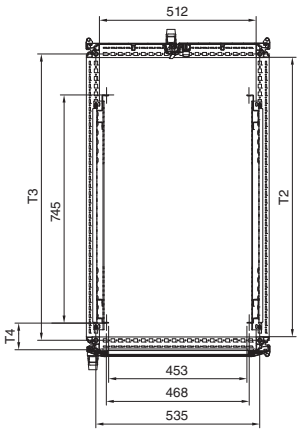

Top view

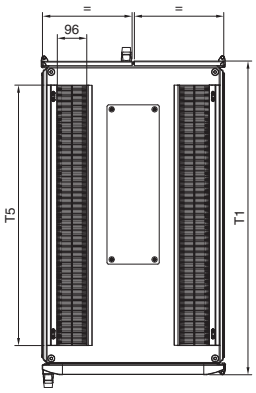

Model No. DK	U	Height dimensions mm			Depth dimensions mm				
		H1	H2	H3	T1	T2	T3	T4	T5
5508.110	42	1998.5	1912	1774	1024	912	935	87	850
5510.110	42	1998.5	1912	1774	1224	1112	1135	147	1050
5513.110	47	2198.5	2112	1974	1024	912	935	87	850
5515.110	47	2198.5	2112	1974	1224	1112	1135	147	1050

With vented door for rack climate control

Width 800 mm Innovations 2012, page 14/15

Front view

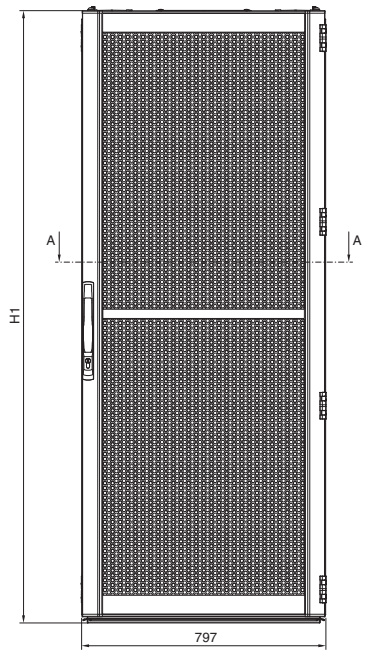

Side view

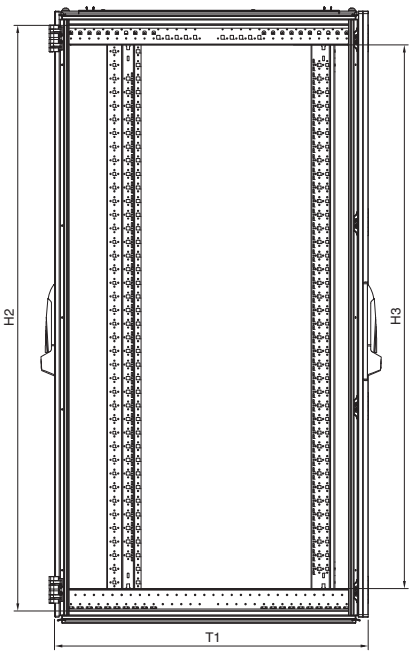

Rear view

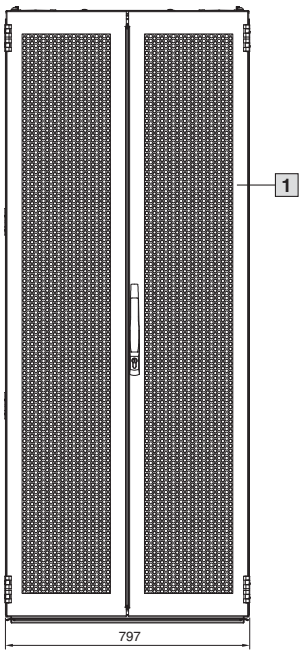

Section A – A

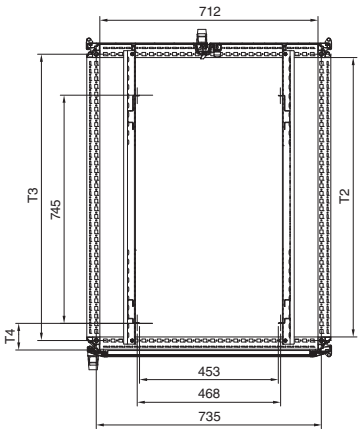

Top view

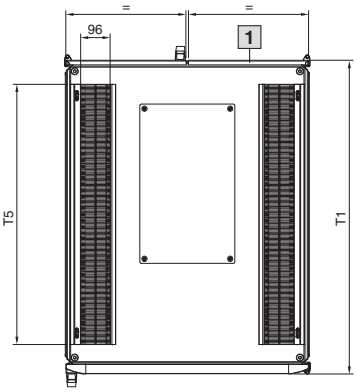

1 For height 1200 mm with one-piece door.

Model No. DK	U	Height dimensions mm			Depth dimensions mm				
		H1	H2	H3	T1	T2	T3	T4	T5
5504.110	24	1198.5	1112	974	1024	912	935	87	850
5509.110	42	1998.5	1912	1774	1024	912	935	87	850
5511.110	42	1998.5	1912	1774	1224	1112	1135	147	1050
5514.110	47	2198.5	2112	1974	1024	912	935	87	850
5516.110	47	2198.5	2112	1974	1224	1112	1135	147	1050

Support arm system 60/120/180

Attachment, system 60/120

for command panels with support arm connection Ø 130 mm Innovations 2012, page 38

CP 6206.320

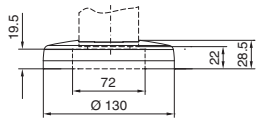

CP 6212.320

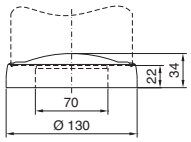

Mounting cut-out, enclosure Ø 130 mm

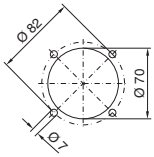

Attachment, system 60

for command panels with support arm connection ▭ 120 x 65 mm Innovations 2012, page 38

CP 6206.360

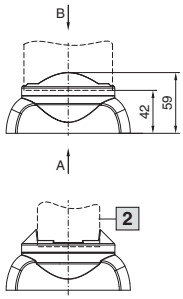

View A

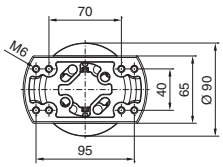

View B

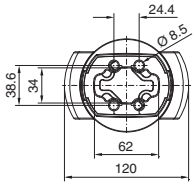

Mounting cut-out, enclosure ▭ 120 x 65 mm

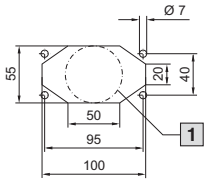

1 Alternative max. Ø 55 mm

2 Support section may also be rotated through 90°

Coupling, system 60/120

for command panels with support arm connection Ø 130 mm Innovations 2012, page 38

CP 6206.300

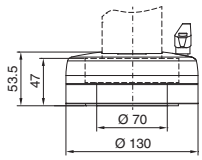

CP 6212.300

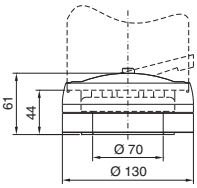

Mounting cut-out, enclosure Ø 130 mm

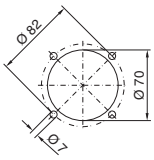

Coupling, system 60

for command panels with support arm connection ▭ 120 x 65 mm Innovations 2012, page 39

CP 6206.340

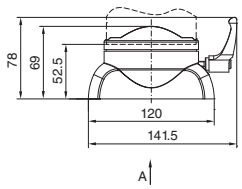

View A

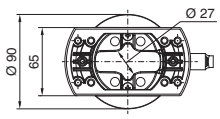

Mounting cut-out, enclosure ▭ 120 x 65 mm

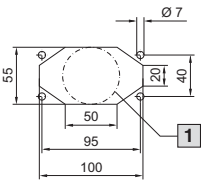

1 Alternative max. Ø 55 mm

Angle coupling 90°, system 60/120

for command panels with support arm connection Ø 130 mm Innovations 2012, page 39

CP 6206.380

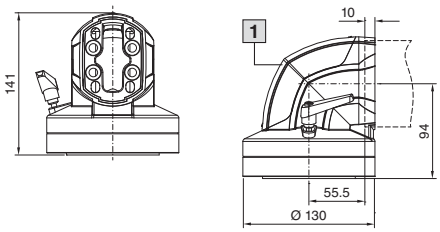

CP 6212.380

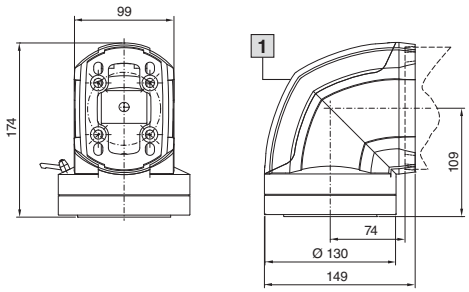

Mounting cut-out, enclosure Ø 130 mm

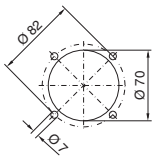

1 Removable cover

Support section, system 60/120/180, solid and 120/180, open

Innovations 2012, page 30/31

Support section closed

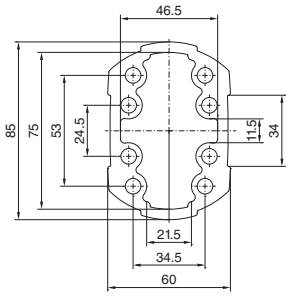

Support section open

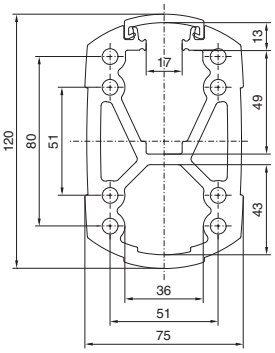

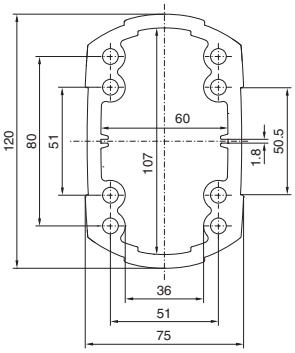

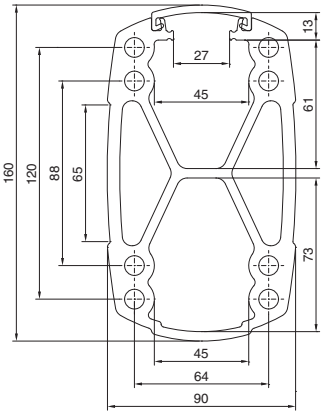

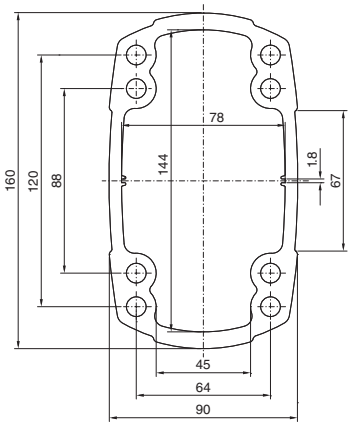

Length mm	Support section, system 60	
	Closed	Open
	Model No. CP	
250	**6206.025**	**–**
500	**6206.050**	**–**
1000	**6206.100**	**–**
2000	**6206.200**	**–**

Length mm	Support section, system 120	
	Closed	Open
	Model No. CP	
250	**6212.025**	**–**
500	**6212.050**	**6212.150**
1000	**6212.100**	**6212.110**
2000	**6212.200**	**6212.210**

Length mm	Support section, system 180	
	Closed	Open
	Model No. CP	
500	**6218.050**	**6218.150**
1000	**6218.100**	**6218.110**
2000	**6218.200**	**6218.210**

Support arm system 60/120/180

Angle piece 90°, system 60/120/180

Innovations 2012, page 40

CP 6206.600

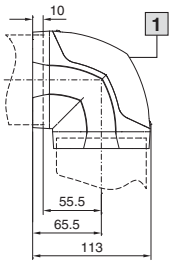

CP 6212.600

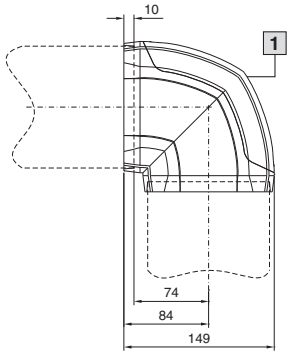

CP 6218.600

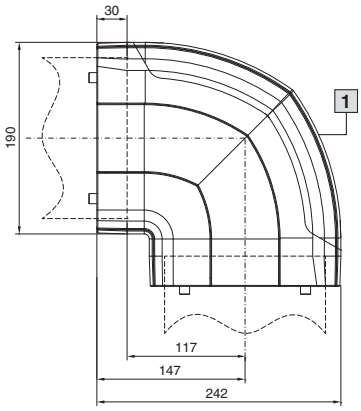

1 Removable cover

Intermediate hinge, system 60/120/180

Innovations 2012, page 41

CP 6206.620

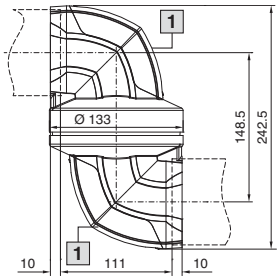

CP 6212.620

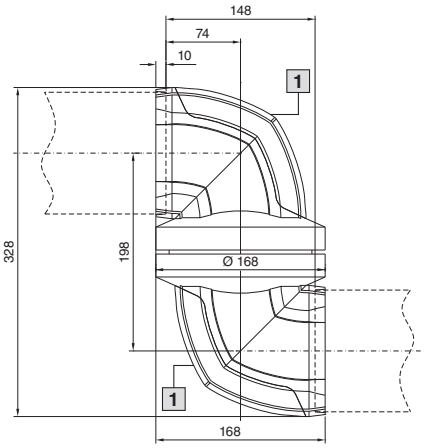

CP 6218.620

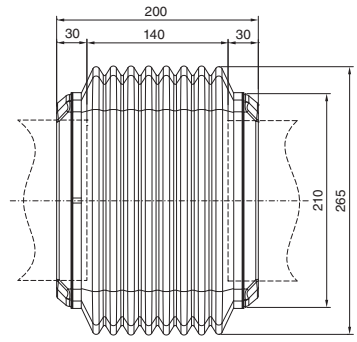

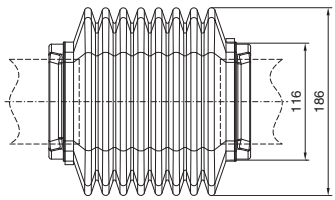

1 Removable cover

Top-mounted joint, system 120

Vertical outlet Innovations 2012, page 41

CP 6212.720

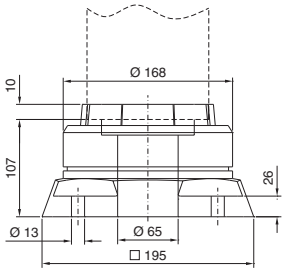

Mounting cut-out

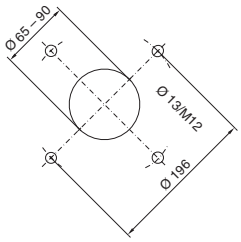

Top-mounted joint, system 60/120/180

Horizontal outlet Innovations 2012, page 42

CP 6206.700

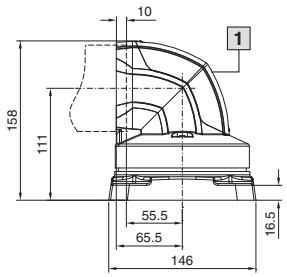

Mounting cut-out

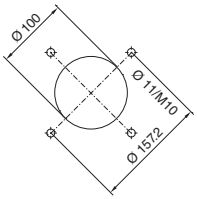

CP 6212.700

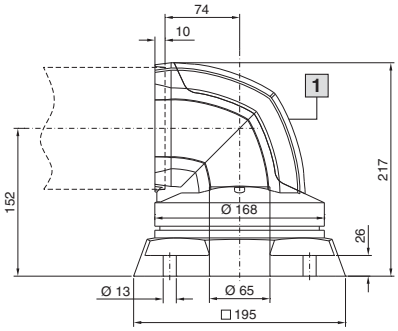

Mounting cut-out

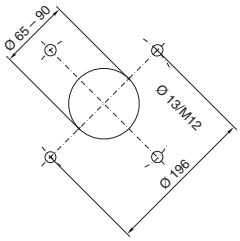

CP 6218.700

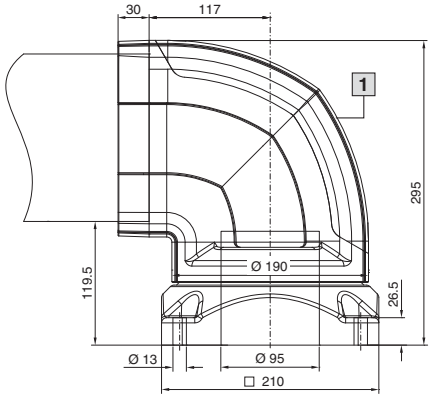

Mounting cut-out

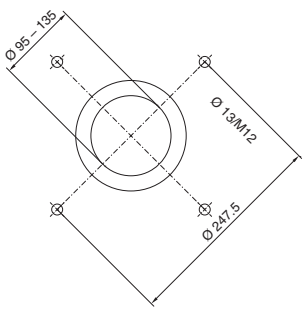

1 Removable cover

Support arm system 60/120/180

Wall-mounted hinge, system 120

Vertical outlet Innovations 2012, page 42

CP 6212.760

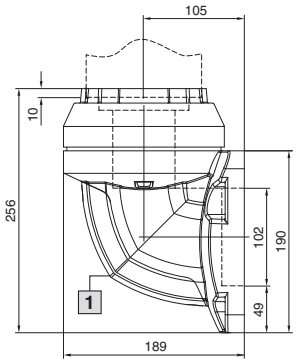

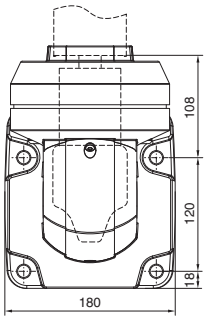

Mounting cut-out

Top-mounted

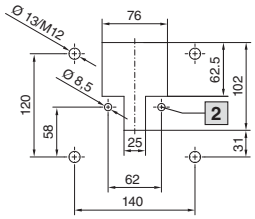

Suspended

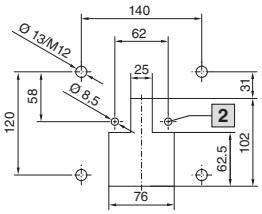

1 Removable cover

2 Attachment by means of pins

Wall-mounted hinge, system 60/120/180

Horizontal outlet Innovations 2012, page 43

CP 6206.740

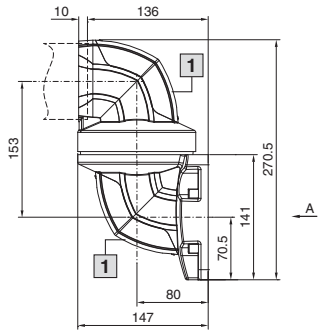

View A

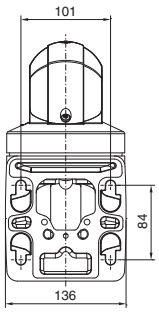

Mounting cut-out

Top-mounted

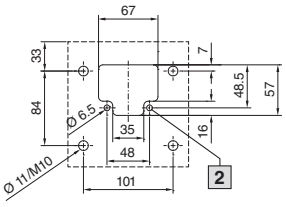

Suspended

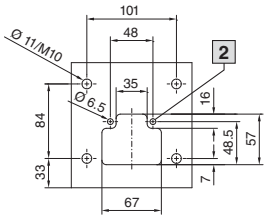

1 Removable cover

2 Attachment by means of pins

CP 6212.740

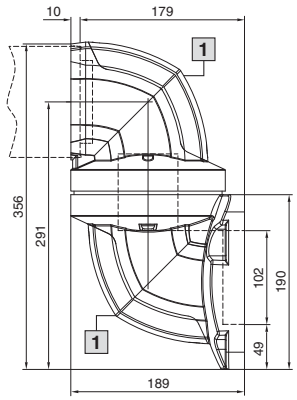

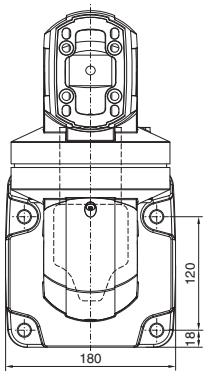

Mounting cut-out

Top-mounted

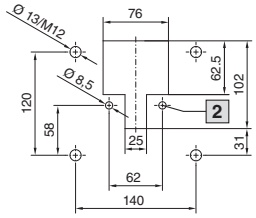

Suspended

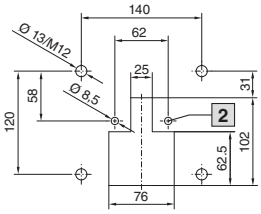

1 Removable cover

2 Attachment by means of pins

CP 6218.740

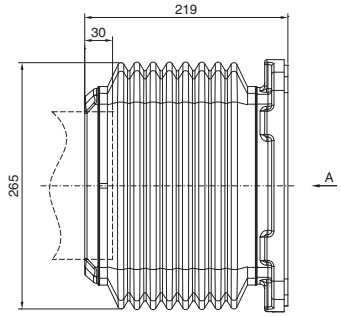

View A

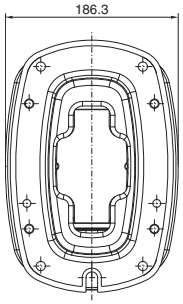

Mounting cut-out

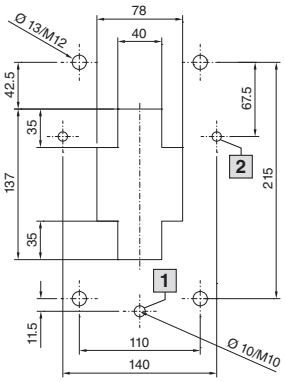

1 Mounting aid

2 Attachment by means of pins

Support arm system 60/120/180

Wall/base mounting bracket, system 60/120/180, small

Innovations 2012, page 44

CP 6206.820

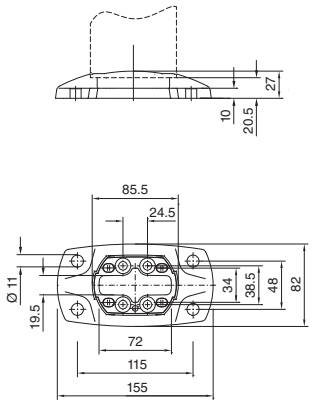

Mounting cut-out

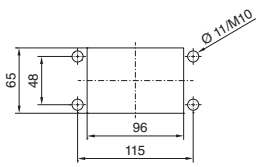

6212.820

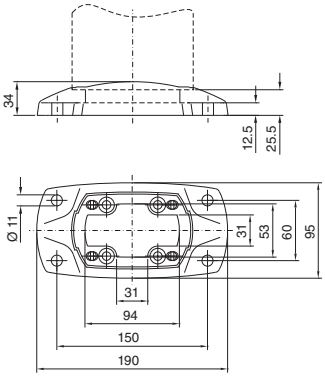

Mounting cut-out

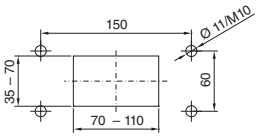

CP 6218.820

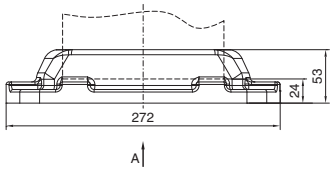

Mounting cut-out

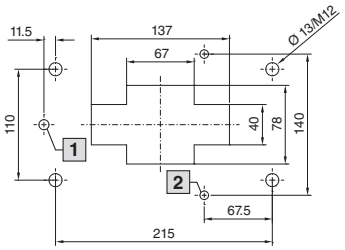

View A

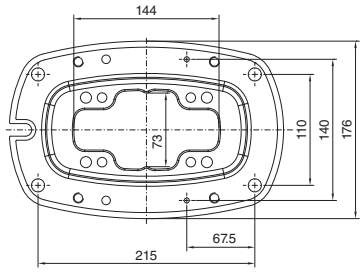

1 Mounting aid

2 Attachment by means of pins

Wall/base mounting bracket, system 60/120, large

Innovations 2012, page 44

CP 6206.800

View A

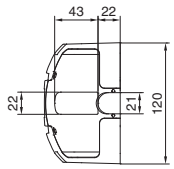

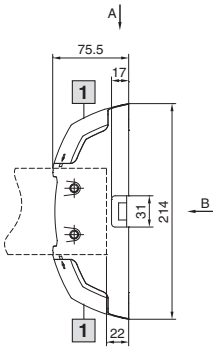

View B

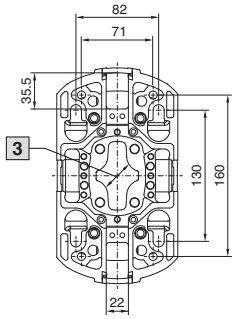

Mounting cut-out

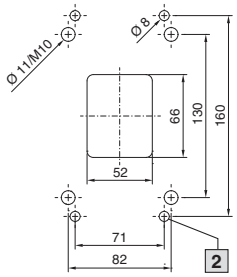

1 Removable cover
2 Attachment by means of pins
3 Max. Ø 52 mm

CP 6212.800

View A

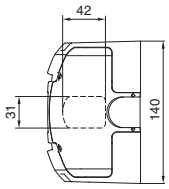

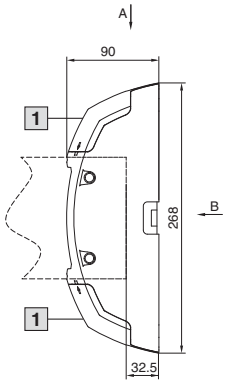

View B

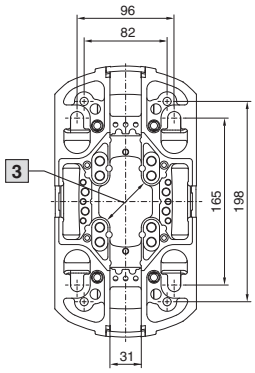

Mounting cut-out

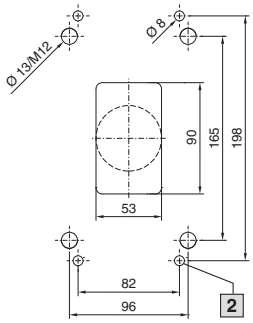

Adaptor for support arm combination

Innovations 2012, page 45

System 120/60
CP 6212.640

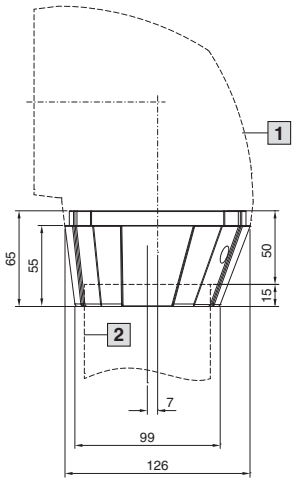

1 Connection of system 120 components CP 6212.600, CP 6212.620
2 Support section, system 60

System 180/120
CP 6218.640

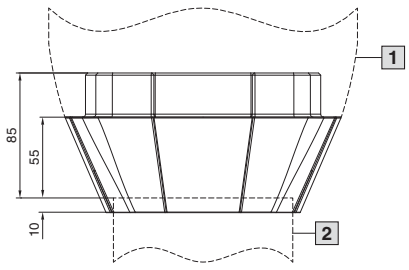

1 Connection of system 180 components CP 6218.600, CP 6218.620, CP 6218.740
2 Support section, system 120

Support arm system 60/120/180

Tilting adaptor 10°, system 60/120

for command panels with support arm connection Ø 130 mm Innovations 2012, page 46

CP 6206.400

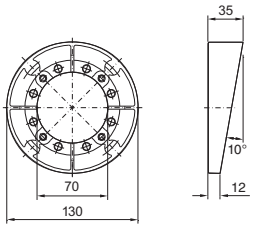

Mounting cut-out, enclosure Ø 130 mm

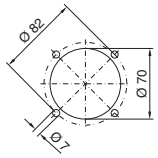

Tilting adaptor 10°, system 60/120

for command panels with support arm connection ▭ 120 x 65 mm Innovations 2012, page 46

CP 6206.440

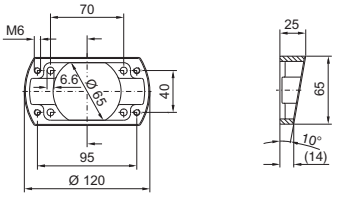

Mounting cut-out, enclosure ▭ 120 x 65 mm

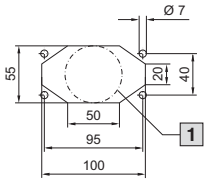

1 Alternative max. Ø 55 mm

Tilting adaptor +/–45°, system 60/120

for command panels with support arm connection Ø 130 mm Innovations 2012, page 47

CP 6206.420

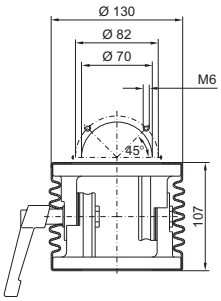

Mounting cut-out, enclosure Ø 130 mm

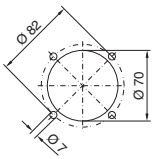

Tilting adaptor +100°/–60°

for command panels with support arm connection ▭ 120 x 65 mm Innovations 2012, page 47

CP 6206.460

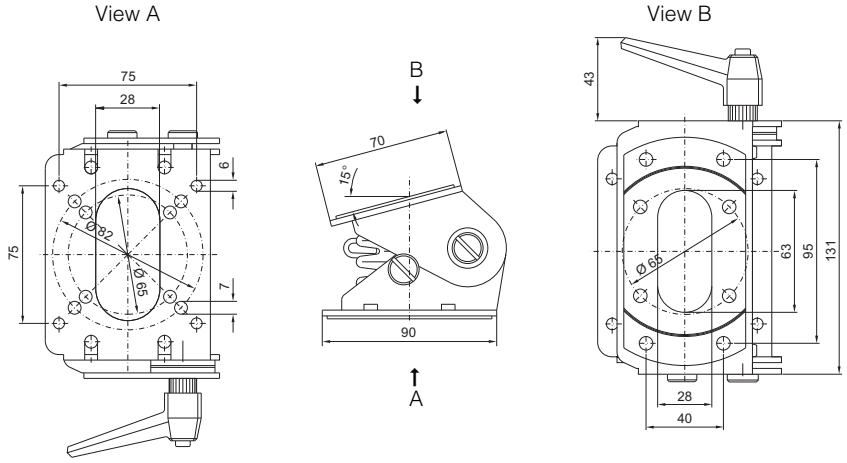

Adaptor from support arm connection Ø 130 mm to ▭ 120 x 65 mm

Innovations 2012, page 48

CP 6212.500

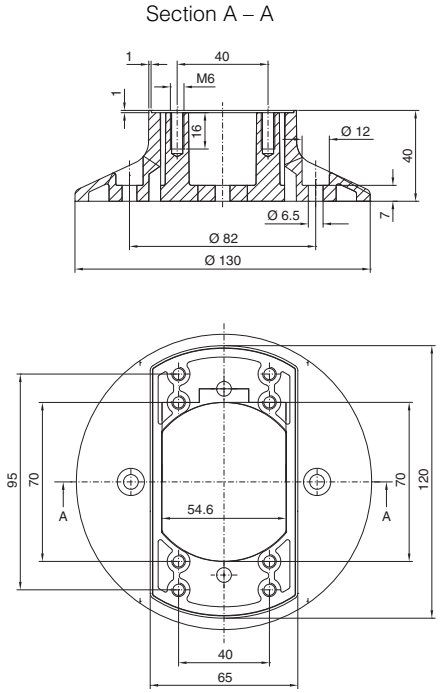

Support arm system 60/120/180

Adaptor for Siemens Pro-Panel

Innovations 2012, page 48

CP 6206.500

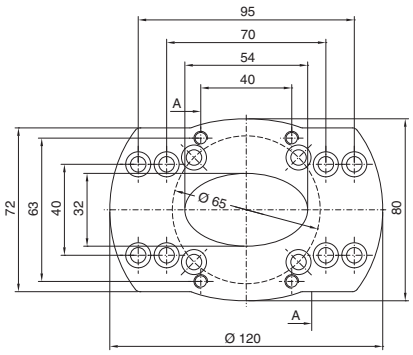

Section A – A

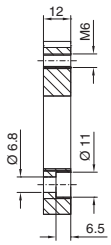

Adaptor from support arm connection Ø 180 mm to Ø 130 mm

Innovations 2012, page 49

CP 6212.520

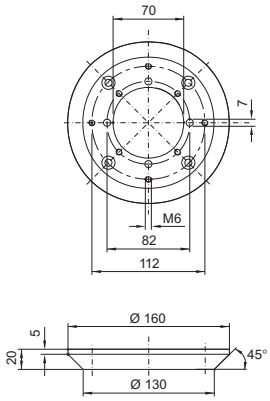

Connection plates

with reinforcement plate Innovations 2012, page 49

CP 6212.540

CP-L

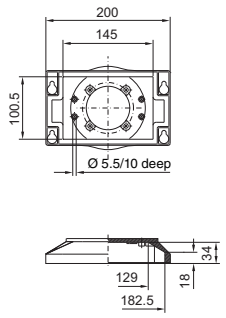

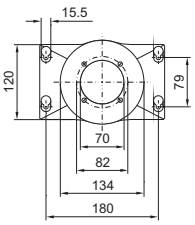

Mounting cut-out

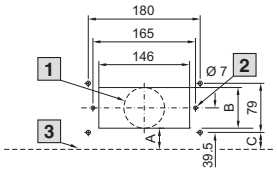

1 Alternative Ø B mm

2 Ø 6 mm only with metal enclosures for securing the reinforcement plate

3 Outer edge of enclosure at the rear

Bus-mounting fuse bases (3-pole)

Easy Connect version Innovations 2012, page 62

For 60 mm busbar systems **Note:** – For the use of fuse inserts to IEC/EN 60 269-3 (DIN VDE 0636-301). – Load factor, see Catalogue 33 – Technical details, page 149. – Current carrying capacity of connection cables, see Catalogue 33 – Technical details, page 150. – Use of semi-conductor fuses, see Catalogue 33 – Technical details, page 156.	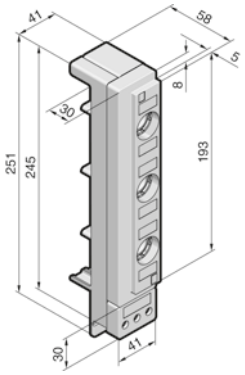	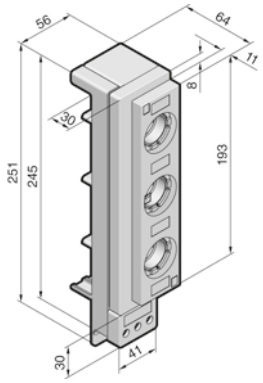	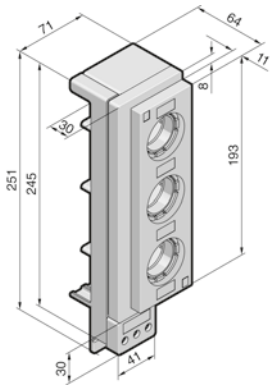
Fuse inserts	D 02-E 18 (adaptor sleeve)	D II-E 27 (adaptor screw)	D III-E 33 (adaptor screw)
Rated current	63 A	25 A	63 A
Rated operating voltage	400 V AC	500 V AC	690 V AC
	400 V DC	500 V DC	690 V DC
Model No. SV	**3418.040**	**3427.040**	**3433.040**
Assembly data for applications to IEC (EN)			
Tightening torque Nm – Terminal screw	2.5	2.5	2.5
Type of connection	Box terminal	Box terminal	Box terminal
Conductor connection Cu mm^2 f (with wire end ferrules)	1.5 – 16	1.5 – 16	1.5 – 16
Conductor connection Cu mm^2 re/rm	1.5 – 16	1.5 – 16	1.5 – 16

RiLine60 fuse elements

Bus-mounting fuse bases (3-pole)

Standard version Innovations 2012, page 63

For 60 mm busbar systems

Note:
– For the use of fuse inserts to IEC/EN 60 269-3 (DIN VDE 0636-301).
– Load factor, see Catalogue 33 – Technical details, page 149.
– Current carrying capacity of connection cables, see Catalogue 33 – Technical details, page 150.
– Use of semi-conductor fuses, see Catalogue 33 – Technical details, page 156.

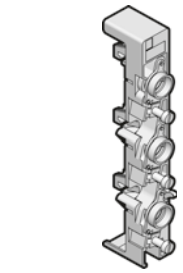

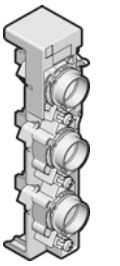

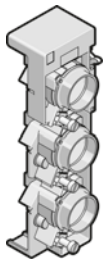

1

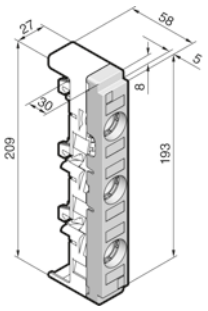

1

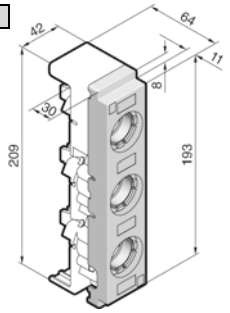

1

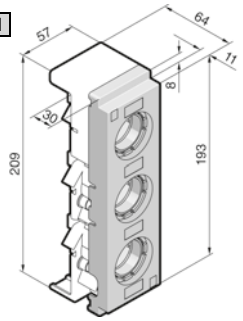

2

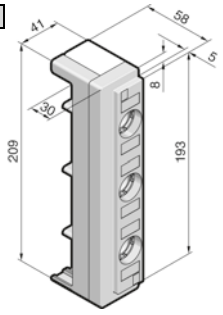

2

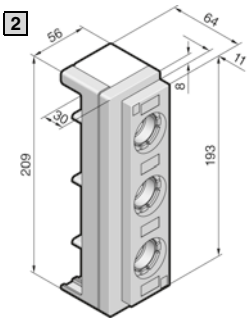

2

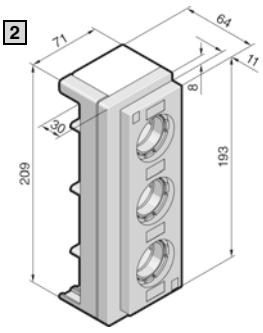

Fuse inserts		D 02-E 18 (adaptor sleeve)	D II-E 27 (adaptor screw)	D III-E 33 (adaptor screw)
Rated current		63 A	25 A	63 A
Rated operating voltage		400 V AC	500 V AC	690 V AC
		400 V DC	500 V DC	690 V DC
Model No. SV		**3418.010**	**3427.010**	**3433.010**
Assembly data for applications to IEC (EN)				
Tightening torque Nm – Terminal screw		4	2,5	4
Type of connection		Box terminal	Box terminal	Box terminal
Conductor connection Cu mm^2	f (with wire end ferrules)	1.5 – 25	1.5 – 16	1.5 – 25
	re/rm	1.5 – 25	1.5 – 16	1.5 – 25
Accessories				
		Model No. SV		
1 Contact hazard protection cover		**3418.020**	**3427.020**	**3433.020**
Side cover		**3093.010**	**3093.020**	**3093.020**
2 Connection space extender, side		**3418.030**	**3427.030**	**3433.030**

OM adaptor 16 A/25 A/32 A/40 A with connection cables (3-pole)

Innovations 2012, page 65

For 60 mm busbar systems **Note:** – Technical information on current carrying capacity of connection cables, see Catalogue 33 – Technical details, page 150. – Maximum continuous operating temperature of the connection cables of the adaptor: 105°C.	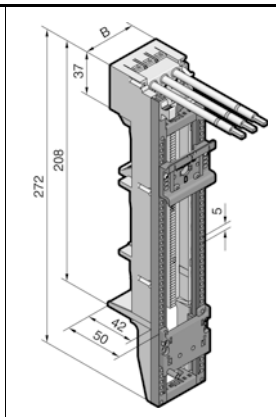	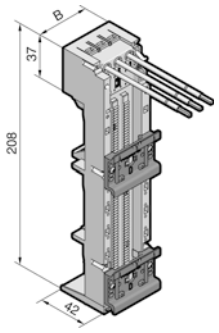	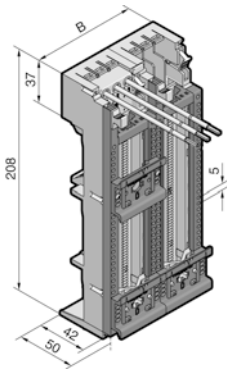
Width (B) mm	45	45	90
Rated current up to	16 A	25 A	25 A
Rated operating voltage	690 V AC	690 V AC	690 V AC
Connection cables (Length mm)	AWG 12 (165)	AWG 12 (130)	AWG 12 (130)
Support rails (Height mm)	10	10	10
Model No. SV	**9340.760[1)]**	**9340.320**	**9340.400**

[1)] OM adaptor with extended connection cables for switchgear, e.g. Siemens 3RV2011... and 3RV2021... (build size S00/S0).

For 60 mm busbar systems **Note:** – Technical information on current carrying capacity of connection cables, see Catalogue 33 – Technical details, page 150. – Maximum continuous operating temperature of the connection cables of the adaptor: 105°C.	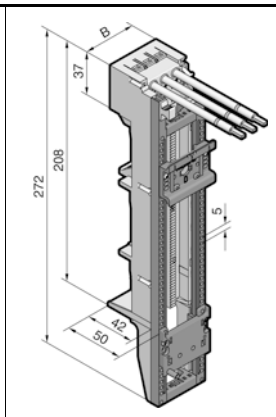	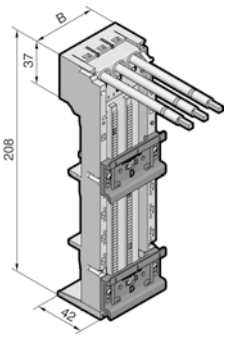	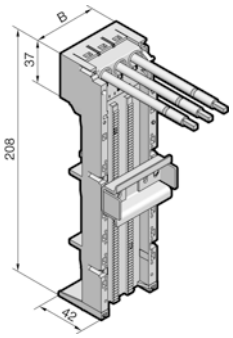
Width (B) mm	45	55	55
Rated current up to	32 A	40 A	40 A
Rated operating voltage	690 V AC	690 V AC	690 V AC
Connection cables (Length mm)	AWG 10 (165)	AWG 8 (130)	AWG 8 (130)
Support rails (Height mm)	10	10	15
Model No. SV	**9340.770[1)]**	**9340.740**	**9340.750**

[1)] OM adaptor with extended connection cables for switchgear with spring terminals, e.g. Siemens 3RV2011... and 3RV2021... (build size S00/S0).

RiLine60 component adaptors

OM support without contact system (3-pole)

Innovations 2012, page 65

For 60 mm busbar systems	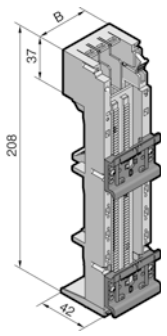
Width (B) mm	45
Support rails (Height mm)	10
Model No. SV	**9340.300**

Circuit-breaker component adaptors 250 A (3-pole)

Innovations 2012, page 66

For 60 mm busbar systems	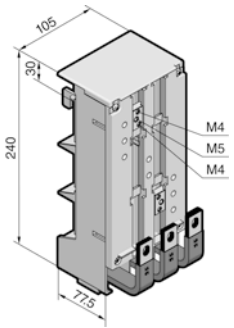	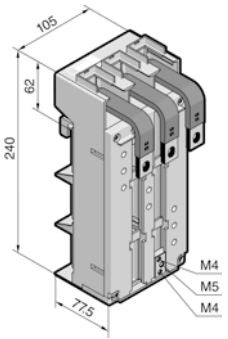
Rated current up to	250 A	250 A
Rated operating voltage	690 V AC	690 V AC
With laminated connection mm[1)]	18 x 18 x 0.3	18 x 18 x 0.3
Cable outlet[2)]	top	bottom
Model No. SV	**9345.600**	**9345.610**
Assembly data for applications to IEC (EN)		
Tightening torque Nm – Rail attachment – Switchgear attachment	 6 1.5	 6 1.5
Material specifications		
Contact track E-Cu	■	■

[1)] Number of lamellas x lamella width x lamella thickness
[2)] Switch outlet or outgoing cable

Circuit-breaker component adaptors 400 A/630 A (3-pole)

Innovations 2012, page 66

For 60 mm busbar systems	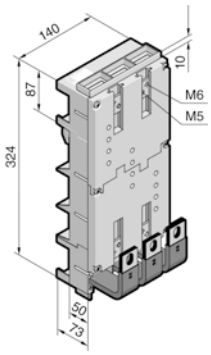		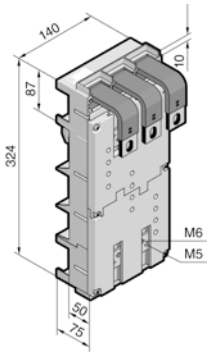	
Rated current up to	400 A	630 A	400 A	630 A
Rated operating voltage	690 V AC	690 V AC	690 V AC	690 V AC
With laminated connection mm[1)]	20 x 29 x 0.3	32 x 29 x 0.3	20 x 29 x 0.3	32 x 29 x 0.3
Cable outlet[2)]	top	bottom	top	bottom
Model No. SV	**9345.720**	**9345.700**	**9345.730**	**9345.710**
Assembly data for applications to IEC (DIN EN)				
Tightening torque Nm – Rail attachment – Switchgear attachment	 14 2.5	 14 2.5	 14 2.5	 14 2.5
Material specifications				
Contact track E-Cu	■	■	■	■

[1)] Number of lamellas x lamella width x lamella thickness
[2)] Switch outlet or outgoing cable

Circuit-breaker component adaptors 250 A (4-pole)

Innovations 2012, page 67

For 60 mm busbar systems	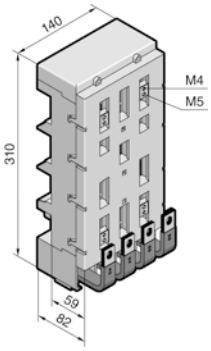	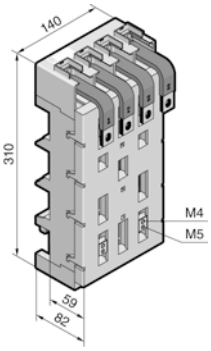
Rated current up to	250 A	250 A
Rated operating voltage	690 V AC	690 V AC
With laminated connection mm[1)]	18 x 18 x 0,3	18 x 18 x 0,3
Cable outlet[2)]	oben	unten
Model No. SV	**9345.604**	**9345.614**
Assembly data for applications to IEC (DIN EN)		
Tightening torque Nm – Rail attachment – Switchgear attachment	 6 1,5	 6 1,5
Material specifications		
Contact track E-Cu	■	■

[1)] Number of lamellas x lamella width x lamella thickness
[2)] Switch outlet or outgoing cable

RiLine60 component adaptors

Circuit-breaker component adaptors 500 A (4-pole)

Innovations 2012, page 67

For 60 mm busbar systems		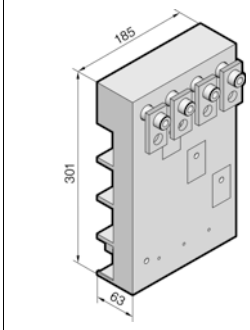	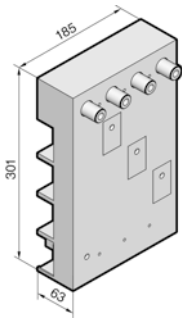		
Rated current up to		500 A	500 A	500 A	500 A
Rated operating voltage		690 V AC	690 V AC	690 V AC	690 V AC
For switchgear make/model	ABB	Tmax T5	–	–	–
	Eaton	–	–	NZM3-4-XKR130	–
	Schneider Electric	–	NS(X)400, NS(X)630	–	–
	Siemens	–	–	–	3VL400
Cable outlet[1)]		bottom	bottom	bottom	bottom
Model No. SV		**9345.704**	**9345.714**	**9345.724**	**9345.734**
Assembly data for applications to IEC (DIN EN)					
Tightening torque Nm – Rail attachment		12	12	12	12
Material specifications					
Contact track E-Cu		■	■	■	■

[1)] Switch outlet or outgoing cable

NH slimline fuse-switch disconnectors (3-pole)

Size 00 – 3 with electronic fuse monitoring Innovations 2012, page 73

Note:
- For the use of fuse inserts to DIN EN 60 269-2.
- Technical specifications to IEC/EN 60 947-3, see Catalogue 33 – Technical details, page 202.
- Load factor, see Catalogue 33 – Technical details, page 149.
- Current carrying capacity of connection cables, see Catalogue 33 – Technical details, page 150.
- Use of semi-conductor fuses, see Catalogue 33 – Technical details, page 156.

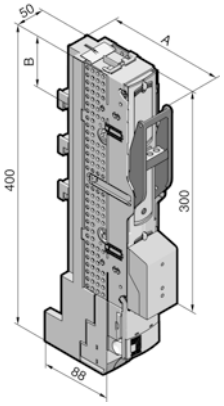

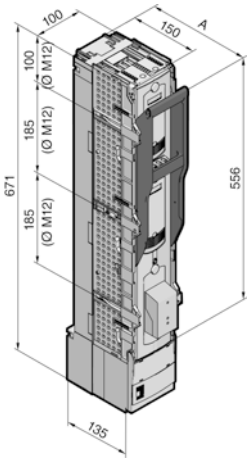

		Size 00		Size 1	Size 2	Size 3
Size						
Rated current		160 A		250 A	400 A	630 A
Rated operating voltage		690 V AC		690 V AC	690 V AC	690 V AC
For bar centre distance mm		60	100	185	185	185
Cover position A mm	Closed	123		199	199	199
	Off-load position	183		260	260	260
Contact point (L1) W mm		84	30	–	–	–
For converter installation		–	■	■	■	■
Model No. SV		**9646.015**	**9346.065[1)]**	**9346.115**	**9346.215**	**9346.315**
Assembly data for applications to IEC (EN)						
Tightening torque Nm – Rail attachment – Terminal screw		6 4,5		40 32	40 32	40 32
Type of connection		Screw M8		Bolt M12	Bolt M12	Bolt M12
Conductor connection re/rm Cu mm^2		2,5 – 95		–	–	–
Conductor connection with ring terminal mm^2		up to 95		up to 240	up to 240	up to 240
Minimum distance to conductive earthed parts mm	Side	50		10	10	10
	Top	100		50	50	50
	Rear	0		0	0	0
Material specifications						
Contact track E-Cu, silver-plated		■		■	■	■

[1)] When using busbar adaptor SV 9346.410/SV 9346.420 – see Catalogue 33, page 325 – also suitable for mounting on 185 mm busbar systems.

RiLine NH fuse elements

NH slimline fuse-switch disconnectors size 00 – 3

Electronic fuse monitoring
Innovations 2012, page 73

Technical data	Electronic fuse monitoring
Rated operating voltage U_e	400 V AC to 690 V AC
Tolerance	±10 % (400/500 V AC) +5 %/–10 % (690 V AC)
Rated insulation voltage U_i	1000 V AC
Rated surge voltage resistance U_{imp}	8 kV
Rated frequency	50 – 60 Hz
Response time	Max. 1.5 s
Auxiliary contacts	1 NO, 1 NC 250 V AC, 30 V DC, 5 A
Load capacity of auxiliary contacts	5 A
Permissible ambient temperature	–20°C to +55°C (400/500 V AC), –20°C to +45°C (690 V AC)
Display	LED flashing green (operational) 13/14: open 21/22: closed
	LED flashing red (error message) 13/14: closed 21/22: open
Connection of auxiliary contacts	Terminal up to 1.5 mm²
NH fuse inserts to IEC/EN 60 269-3	With contacted, live puller lugs
Material	Insulation-displacement contacts: E-Cu, tin-plated
Function	Differential voltage

Wiring diagram

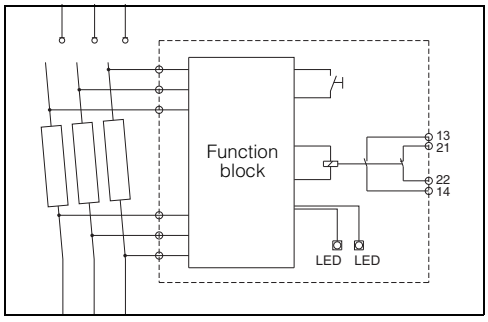

Electronic fuse monitoring

TS 8 enclosures for distribution enclosures

up to 1250 A Innovations 2012, page 80

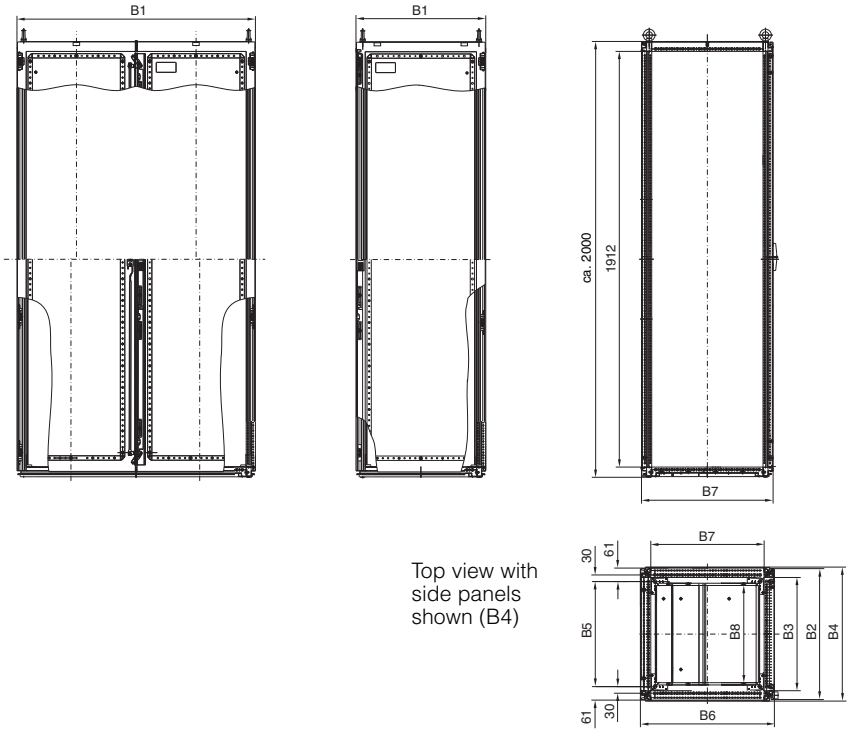

Width dimensions mm								Model No. SV
B1	B2	B3	B4	B5	B6	B7	B8	
597	592	512	606	475	605	512	440	**9660.605**
847	842	762	856	725	605	512	690	**9666.915**
1097	1092	1012	1106	975	605	512	940	**9666.925**
597	592	512	606	475	405	312	440	**8604.500**
847	842	762	856	725	405	312	690	**9666.955**
1097	1092	1012	1106	975	405	312	940	**9666.965**

Technical data			
Rated current up to	630 A	850 A	1250 A
Rated surge current resistance I_{pk} at a maximum busbar support centre distance of 300 mm	78 kA	97 kA	105 kA
Rated insulation voltage U_i to VDE 0110	1000 V AC		
Cross-section of phase conductor L1 – L3 max.	30 x 10 mm	40 x 10 mm	60 x 10 mm
Busbar centre-to-centre distance	60 mm	100 mm	185 mm
Protective measure	Protection class 1 (with PE conductor)		
Overvoltage category	3	3	3
IP protection category	IP 20 without door, IP 55 with door		

PDU – Power Distribution Unit

PDU international

Innovations 2012, page 91

Compact power distributor for use in IT servers and network enclosures. Please note the relevant product dimensions and check whether the PDU is suitable for installation in your preferred rack. The PDU dimensions and the minimum height of the Rittal rack required may be found in the order table in the Rittal Catalogue. The technical data listed below applies wholly or partially to the following PDU products:

- PDU metered (power measurement at the infeed and/or per phase. No switch function)
- PDU switched (power measurement at the infeed and/or per phase. With switch function)
- PDU managed (power measurement for each individual output slot. With switch function)
- PDU managed slave (like PDU managed, but without display and network interface, with CAN bus for connecting to CMC III or PDU metered/switched/managed)

Technical data applies to the following product variants:
Rittal PDU metered DK 7955.2XX, Rittal PDU switched DK 7955.3XX, Rittal PDU managed DK 7955.4XX

Technical data		
Input voltage range (L – N)		90 V – 260 (400) V AC, 50 – 60 Hz
Input current		16 A/32 A/63 A (depending on variant)
Number of phases		1 or 3, depending on PDU variant
PDU independent power supply		Integral long-range SMPS, error-tolerant from all phases
PDU energy consumption		approx. 15 W
Redundant power supply via PoE		Yes (with PDU switched, PDU managed)
Marking of phases (only 3-phase PDUs: L1, L2, L3)		brown, black, grey
Slots type EN 60 320/C13		Quantity depends on design, see Catalogue
Slots type EN 60 320/C19		Quantity depends on design, see Catalogue
No. of safety switches		2 (1-phase) or 6 (3-phase) with 32 A version, 12 (3-phase) with 63 A version
Electromagnetic safety switch		16 A type C
Slots individually switchable		Yes, only with PDU switched, PDU managed (bistable relay, minimal system consumption)
PDU input connector		EN 60 309/CEE (depending on PDU version), EN 60 320-C20 for DK 7955.201/.301/.401
Length of connection cable		3 m (except with DK 7955.201/.301/401)
Connection cable type		H05-VV
No. of wires		3/5 (1-phase/3-phase PDU)
Cable cross-section		2.5 mm^2/4.0 mm^2 (with 16 A/32 A versions)
PDU enclosure width		44 mm (1 U) not for DK 7955.238
PDU enclosure depth		62 mm
PDU enclosure height (length)		Depending on product variant
PDU material		Aluminium, anodised in RAL 9005 (black)
PDU mounting adaptor		Plastic, black
Measurement functions (input/phase or output slot)	Values recorded	Voltage (V), current (A), frequency (Hz), active power (kW), active energy (kWh), apparent power (VA), apparent energy (kVAh), power factor (cosPhi), zero conductor measurement/unbalanced load identification, fuse monitoring (with 32 A/63 A versions)
	Voltage measurement range	90 V – 260 V
	Voltage resolution	0.1 V
	Voltage accuracy	2%
	Current measurement range	0 – 16/32/63 A (depending on PDU variant)
	Current resolution	0.1 A
	Current accuracy	2%
	Frequency accuracy	2%
	Active power (kW) accuracy	2%
	Apparent power (kVAh) accuracy	2%
	Active energy (kWh) accuracy	1%
	Apparent energy (kVAh) accuracy	2%
	Power factor accuracy	2%
	Freely selectable limits for warning/alarm	Yes
Operating hours meter		Yes
Display		OLED, RGB 128 x 128 pixels, LED per slot (with PDU switched, PDU managed)
Network interface		RJ 45, integrated Web server
Supported protocols		HTTP, HTTPS, SSL, SSH, NTP, Telnet, TCP/IP v4 and v6, DHCP, DNS, NTP, Syslog, SNMP v1, v2c and v3, XML, FTP/SFTP (update/file transfer), sending e-mails (SMTP)
User administration including rights management		Yes
LDAP(S)/Radius/Active Directory connection		Yes
USB port for firmware update and data logging functions		Yes
CAN bus interface		RJ 45, for the connection of sensors
CAN sensor types		Temperature, temperature/humidity (combined), infrared access sensor, vandalism sensor
Max. number of sensors per PDU		4, sensor configuration freely selectable, including 4 x same type
Plug & play drivers in the Rittal RiZone DCIM software		Yes
Conformity		CE

PDU international

Innovations 2012, page 91

Technical data		
Standards	Safety	EN 60 950-1
	EMC	EN 55 022/B, EN 61 000-4-2, EN 61 000-4-3, EN 61 000-6-2, EN 61 000-6-3
Safety Directive		2006/95/EC
EMC Directive		2004/108/EC
MTBF (at 40 °C)		200,000 hours
Protection category		IP 20 (EN 60 529)
Protection category		3
Level of contamination		2
Overvoltage category		II
Environmental properties		RoHS
Storage temperature		–25 °C to +70 °C
Ambient temperatures		0 °C to +45 °C
Ambient humidity		10 – 95% rel. humidity, non-condensing
Connector lock C13 and C19		1 x (others optional DK 7955.020)
Covers C13 included with supply		8 x (others optional DK 7955.010)
Covers C19 included with supply		2 x (others optional DK 7955.015)
Warranty		24 months

PDU metered 7955.231

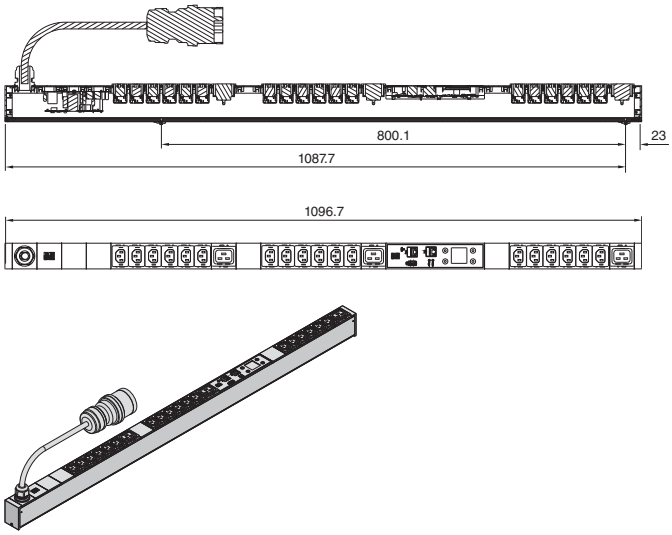

PDU metered 7955.233

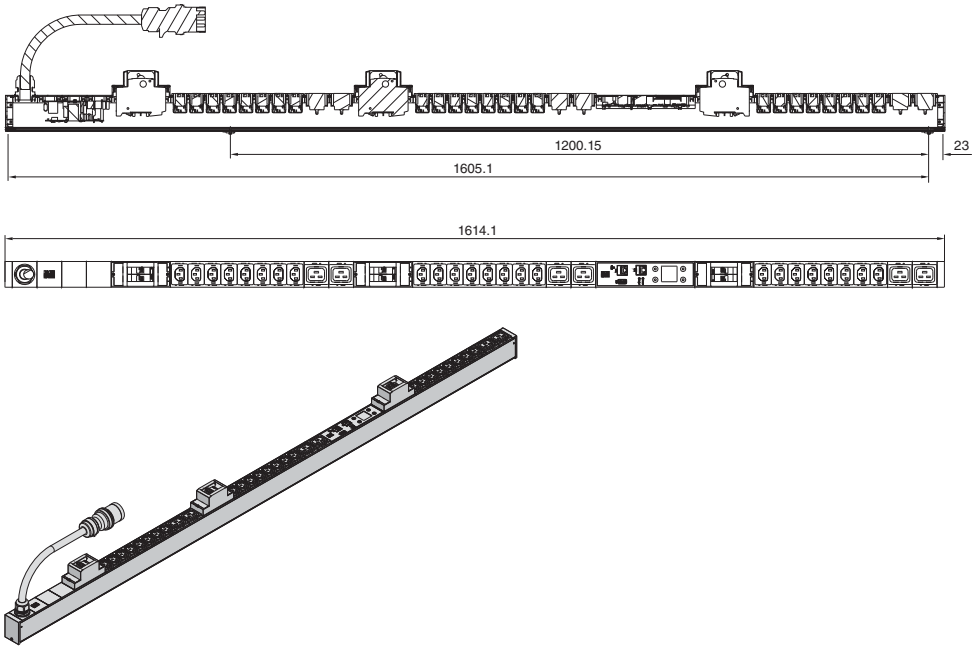

PSM – Power System Modul

PSM measurement bar for CMC III

Innovations 2012, page 96

Modular power distributor for IT network and server enclosures. The required accessories such as mounting kit, connection cable (DK 7859.050 only) and PSM plug-in modules must be ordered separately. See Catalogue 33, page 385/386.
The Rittal CMC III is required for network functionality and data communication via SNMP. These PSM measurement bars with CAN bus interface are used for direct connection to the CMC III monitoring system and cannot be used with the CMC-TC (DK 7320.100 – CMC II)!

Up to 8 (PU) or 4 (PU Compact) blade bars may be connected. An external power pack (DK 7201.210) is needed to operate without Rittal CMC III.

Technical data		**DK 7859.050**	**DK 7859.053**
Input current		16 A	32 A
Number of phases		3	1
No. of infeeds		2	1
No. of slots, PSM module (total)		6	6
No. of slots, PSM module (active, switched)		3	3
No. of slots per phase		1	2
Type of connection		WAGO X-COM	Cable, 3 m with CEE connector
Connection cable type		H05-VV	H05-VV
Number of wires		5	5
Cable cross-section		2.5 mm²	4 mm²
PSM enclosure width		65 mm	65 mm
PSM enclosure depth		75 mm	75 mm
PSM enclosure length		1910 mm	1910 mm
PSM material		Aluminium, anodised	
PSM mounting adaptor		In accessories (e.g. DK 7856.011/DK 7856.029)	
Power supply, measurement electronics		24 V DC via CMC III or separate power pack (DK 7201.210)	
Measurement functions (input/phase or output slot)	Logged values (per phase)	Voltage (V), current (A), frequency (Hz), active power (kW), active energy (kWh), apparent power (VA), apparent energy (kVAh), reactive power (Var), power factor (cosPhi), zero conductor measurement/unbalanced load identification	
	Voltage measurement range	180 – 260 V	
	Voltage resolution	0.1 V	
	Voltage accuracy	2%	
	Current measurement range	0 – 18 A	
	Current resolution	0.1 A	
	Current accuracy	2%	
	Frequency accuracy	2%	
	Active power (kW) accuracy	2%	
	Apparent power (VA) accuracy	2%	
	Active energy (kWh) accuracy	1%	
	Apparent energy (kVAh) accuracy	2%	
	Power factor accuracy	2%	
	Freely selectable limits for warning/alarm	Yes	
Display		OLED monochrome/2 lines	
Interface		RJ 45, CAN bus	
Supported protocols via optional CMC III		HTTP, HTTPS, SSL, SSH, NTP, Telnet, TCP/IP v4 and v6, DHCP, DNS, NTP, Syslog, SNMP v1, v2c and v3, XML, FTP/SFTP (update/file transfer), sending e-mails (SMTP)	
Max. number of blade bars per CMC III PU Compact		4	
Max. number of blade bars per CMC III PU Standard		8	
Conformity		CE	
Standards		EN 50 470-1, EN 50 470-3	
Safety		EN 60 950-1	
EMC		EN 61 000-6-2, EN 61 000-6-3, EN 55 022	
MTBF (at 40 °C)		200,000 hours	
Protection category		IP 20 (to EN 60 529)	
Storage temperature		–25 °C to +70 °C	
Ambient temperatures		0 °C to +45 °C	
Ambient humidity		20% – 90%, non-condensing	
Mounting kits			
PSM mounting kit Rittal TS IT rack		DK 7856.029	
PSM mounting kit Rittal DK TS 8 rack		DK 7856.011	
PSM mounting kit, fixed, with strain relief		DK 7856.022	
PSM mounting kit, vertically hinged		DK 7856.023	
PSM mounting kit TE 7000 rack		DK 7000.684	

PSM MID measurement module for CMC III

Innovations 2012, page 97

Active energy meter for use in IT environments in accordance with EU MID Directive 2004/22/EC. MID approval for energy invoicing purposes is valid for 8 years, and may be subsequently extended for a further 8 years by recalibrating the MID measurement module. Horizontal mounting in the 482.6 mm (19˝) level of any IT rack. The connection cables must be ordered separately!
The Rittal CMC III is required for network functionality and data communication via SNMP.
Up to 8 (PU) or 4 (PU Compact) MID measurement modules may be connected.

Technical data		DK 7859.312	DK 7859.332
Input current		16 A	32 A
No. of phases per circuit		3	3
No. of circuits		2	2
Type of connection		Industrial connector	
Connector inputs		HARTING HAN Q4/2/IIme CQ 08V EN 60 309 – CEE 3L+N+PE 6h, IP 44 (with optional cable set DK 7859.335)	
Connector outputs		HARTING HAN Q4/2/IIme CQ 08V EN 60 309 – CEE 3L+N+PE 6h, IP 44 (with optional cable set DK 7859.335)	
Length of input connection cable, optional		2.0 m	
Length of output connection cable, optional		2.0 m	
Connection cable type		H07 RN-F (optional cable kits)	
Number of wires		5	
Cable cross-section		4 mm²	
MID module enclosure width		450 mm (19˝)	
MID module enclosure depth		200 mm	
MID module enclosure height		44.45 mm (1 U)	
PDU material		Sheet steel, spray finished in RAL 9005 (black)	
Measurement functions (input/phase or output slot)	Logged values (per phase)	Voltage (V), current (A), frequency (Hz), active power (kW), active energy (kWh), apparent power (VA), apparent energy (VAh), reactive power (Var), power factor (cosPhi), zero conductor measurement / unbalanced load identification	
	Voltage measurement range	180 – 260 V	
	Voltage resolution	0.1 V	
	Voltage accuracy	2%	
	Current measurement range	0 – 35 A	
	Current resolution	0.1 A	
	Current accuracy	2%	
	Frequency accuracy	2%	
	Active power (kW) accuracy	2%	
	Apparent power (VA) accuracy	2%	
	Active energy (kWh) accuracy	1%	
	Apparent energy (kVAh) accuracy	2%	
	Power factor accuracy	2%	
	Freely selectable limits for warning/alarm	Yes	
Display		OLED monochrome/2 lines	
Interface		RJ 45, CAN bus (CAN-Open)	
Supported protocols via optional CMC III		HTTP, HTTPS, SSL, SSH, NTP, Telnet, TCP/IP v4 and v6, DHCP, DNS, NTP, Syslog, SNMP v1, v2c and v3, XML, FTP/SFTP (update/file transfer), sending e-mails (SMTP)	
Max. number of MID modules per CMC III PU Compact		4	
Max. number of MID modules per CMC III PU Standard		8	
Installation position		Horizontal, screw-fastened in the 482.6 mm (19˝) level	
Assembly parts included with the supply		Cage nuts M5 (4x), screws M5x14 (4x)	
Conformity		CE	
MTBF (at 40 °C)		200,000 hours	
Standards		EN 50 470-1, EN 50 470-3, MID Directive 2004/22/EG	
Safety		EN 60 950-1	
EMC		EN 61 000-6-2, EN 61 000-6-3, EN 55 022/B	
Protection category		3	
Level of contamination		2	
Protection category		IP 51 (EN 60 529)	
Storage temperature		–25 °C to +55 °C	
Ambient temperatures (operation)		–25 °C to +55 °C	
Ambient humidity		20% – 90%, non-condensing	
Connection cable			
Connection cable kit 16 A/3P[1)] (1 x input/1 x output with CEE connector, EN 60 309)		DK 7859.315	
Connection cable kit 16 A/3P[1)] for PSM bars (WAGO X-Com connector, input CEE)		DK 7859.316	
Connection cable kit 32 A/3P[1)] (1 x input/1 x output with CEE connector, EN 60 309)		DK 7859.335	

[1)] To use both circuits in the MID module, the connection cable kit must be ordered twice!

Rittal – The System.

Faster – better – worldwide.

- Enclosures
- Power Distribution
- Climate Control
- IT Infrastructure
- Software & Services

RITTAL GmbH & Co. KG
Postfach 1662 · D-35726 Herborn
Phone +49(0)2772 505-0 · Fax +49(0)2772 505-2319
E-mail: info@rittal.de · www.rittal.com