Rittal – The System.

Faster – better – everywhere.

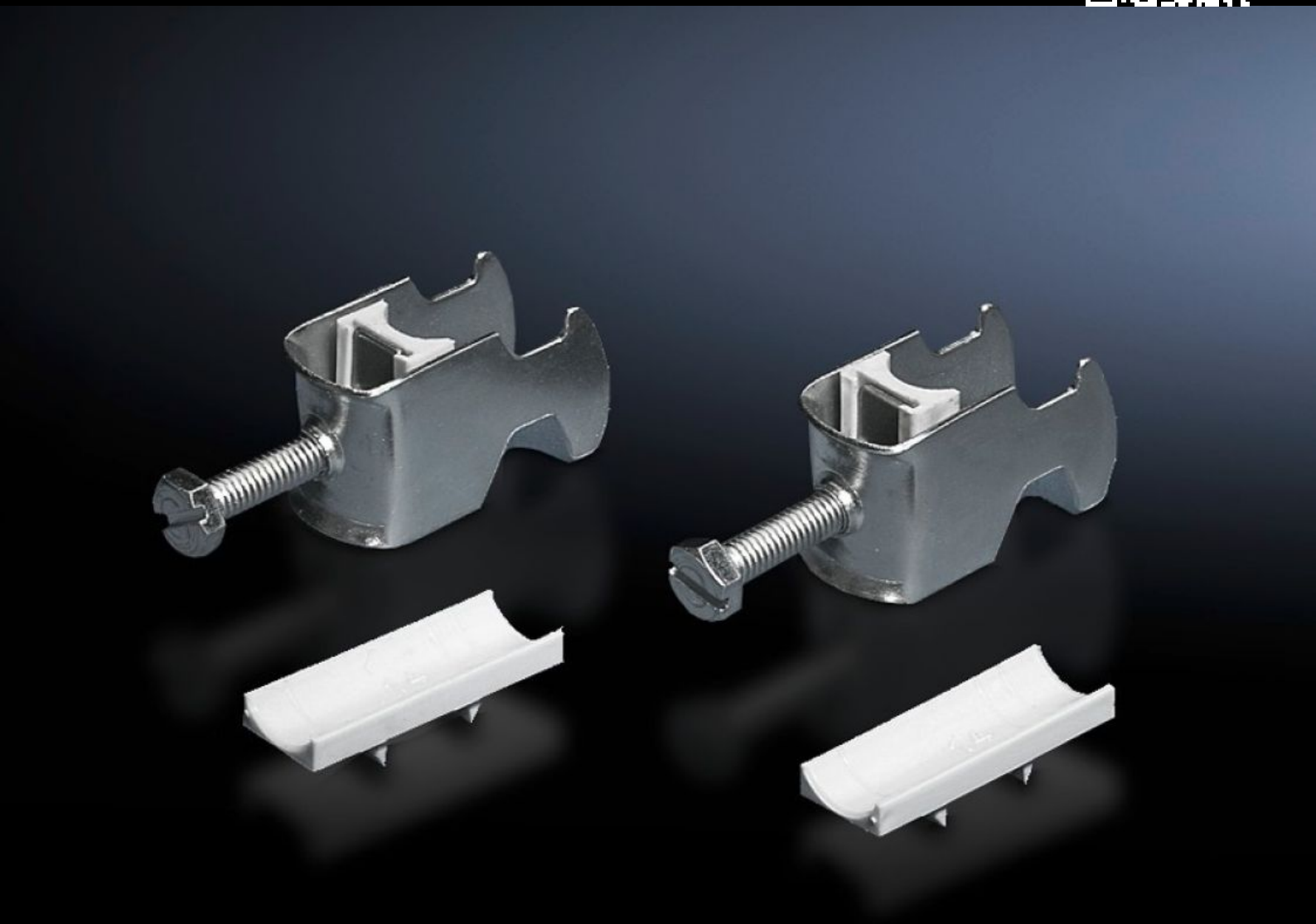

DK 7097.260

Cable clip

State: 26/11/2026 (Source: www.rittal.com/com-en)

DK 7097.260 - Cable clip for C rail, combination rail

For attaching cables to the C rail.

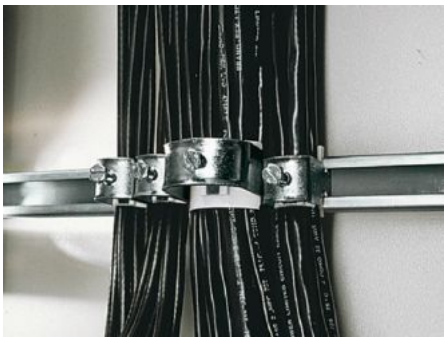

Features

Model No.	DK 7097.260
Design	for cable diameter 26 – 30 mm
Product description	For attaching cables to the C rail.
Material	Sheet steel
Surface finish	Zinc-plated
Supply includes	Plastic insert
Min. cable diameter	26 mm
Max. cable diameter	30 mm
Packs of	25 pc(s).
Net weight	1 kg
Gross weight	1.26 kg
PCF per pack (cradle-to-gate)	4.9 kg CO2 eq (Cat B)
Note on PCF category	Category B: PCF value (cradle-to-gate) based on the product weight, approximately calculated and self-declared
Customs tariff number	73182900
ETIM 9	EC000454
ETIM 8	EC000127
ECLASS 8.0	23140202

Features

Product description	DK Cable clamps, for cable diameter: Ø: 26 - 30 mm

Tender text

Cable clamps 26 - 30 mm
For attaching the cables to the C rails.
For cable diameter: 26 - 30 mm.
Material: Sheet steel, zinc-plated, passivated
with plastic insert

© Rittal 2026