Rittal – The System.

Faster – better – everywhere.

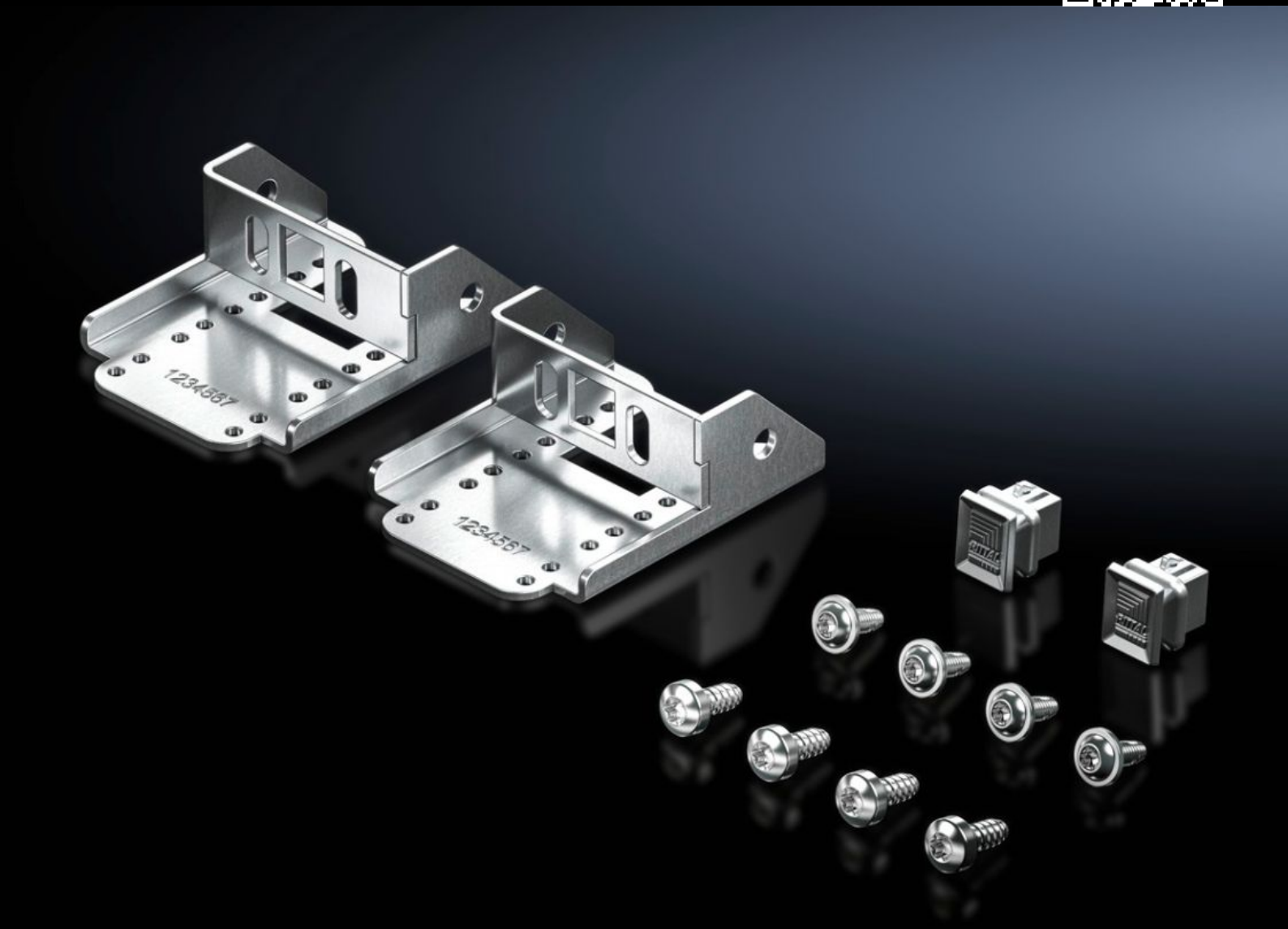

DK 7859.060
Mounting kit

State: 26/11/2026 (Source: www.rittal.com/com-en)

ENCLOSURES | POWER DISTRIBUTION | CLIMATE CONTROL | IT INFRASTRUCTURE | SOFTWARE & SERVICES

FRIEDHELM LOH GROUP

DK 7859.060 - Mounting kit for PSM busbars

For attaching a PSM busbar in the network enclosure.

Features

Model No.	DK 7859.060
Benefits	In the VX IT rack, the rail may be oriented either towards the rear or towards the enclosure interior
Material	Sheet steel, zinc-plated
Supply includes	2 mounting brackets Assembly parts
Installation options	Plug & play on the rack frame
To fit	Enclosure type: VX IT
Packs of	1 pc(s).
Net weight	0.253 kg
Gross weight	0.282 kg
PCF per pack (cradle-to-gate)	1.1 kg CO2 eq (Cat B)
Note on PCF category	Category B: PCF value (cradle-to-gate) based on the product weight, approximately calculated and self-declared
Customs tariff number	83024900
ETIM 9	EC000330
ECLASS 8.0	27142604
Product description	VX IT mounting kit, for modular PDU (PSM), 2 mounting brackets, for Plug & Play attachment of the PSM busbars to the enclosure frame of the VX IT, sheet steel, zinc-plated

© Rittal 2026