Rittal – The System.

Faster – better – everywhere.

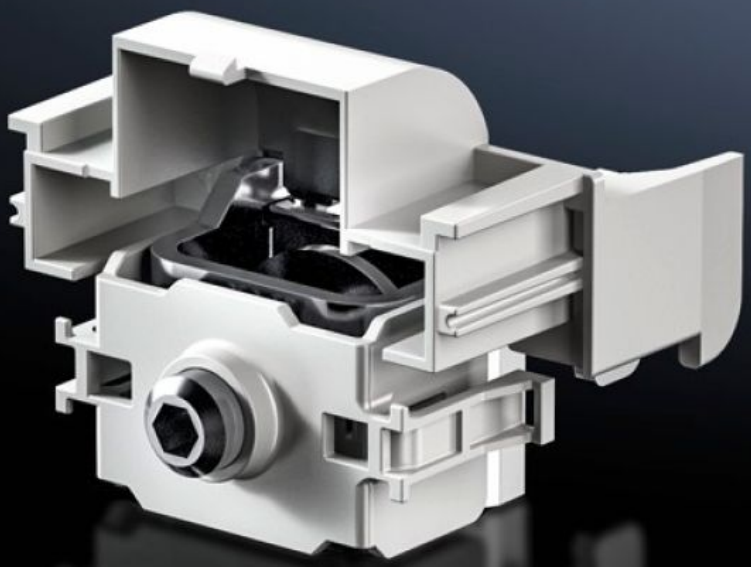

SV 9677.485
Contact terminal

State: 24/11/2026 (Source: www.rittal.com/uk-en)

ENCLOSURES | POWER DISTRIBUTION | CLIMATE CONTROL | IT INFRASTRUCTURE | SOFTWARE & SERVICES

FRIEDHELM LOH GROUP

SV 9677.485 - Contact terminal for NH slimline switch-disconnectors

For mounting NH slimline switch-disconnectors on bar systems with 185 mm centre-to-centre spacing, no drilling required.

Features

Model No.	SV 9677.485
Product description	For mounting NH slimline switch-disconnectors on bar systems with 185 mm centre-to-centre spacing, no drilling required.
Material	Sheet steel, zinc-plated E-Cu, tin-plated Polyamide
Note	Only suitable for use on busbar system with contact hazard protection cover (cover section, slotted)
For size	1 - 3
Packs of	3 pc(s).
Net weight	0.456 kg
Gross weight	0.503 kg
Copper weight (kg per piece)	0.151
Customs tariff number	73182900
ETIM 9	EC000001
ECLASS 8.0	27141146
Product description	SV Contact clamp, for NH slimline switch-disconnector, size 1-3 (185 mm)

© Rittal 2026