Rittal – The System.

Faster – better – everywhere.

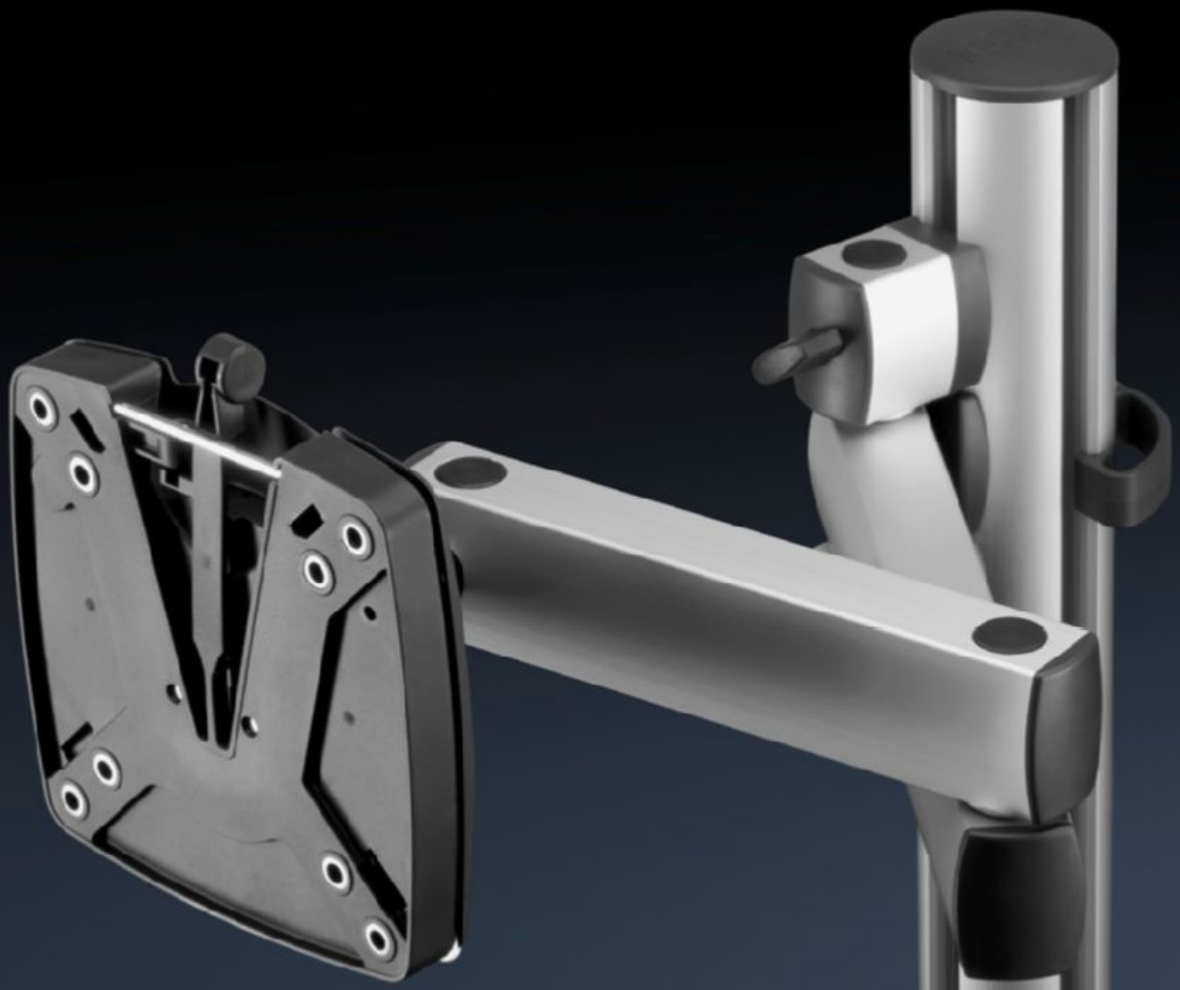

AS 4051.104

Monitor attachment

State: 11/23/2026 (Source: www.rittal.com/us-en)

ENCLOSURES | POWER DISTRIBUTION | CLIMATE CONTROL | IT INFRASTRUCTURE | SOFTWARE & SERVICES

FRIEDHELM LOH GROUP

AS 4051.104 - Monitor attachment for WS 540

For attachment of all standard monitors up to 32" screen size with Vesa 75/100.







Features

Model No.	AS 4051.104
Product description	For mounting all commercially available monitors up to screen diagonals of 32" with Vesa 75/100.
Benefits	Stable monitor mounting Swiveling Height-adjustable
Technical specifications	Height-adjustable up to 285 mm Extendable up to 430 mm Swivel range left/right at full extension 90° Swivel range ball head all-round 35° Vesa 75/100
Material	Aluminum/carbon steel
Supply includes	Monitor attachment Assembly components
Hint Approvals	GS-tested
Load capacity, static	10 kg 22 lb.
Suitable for Model No.	4051.100
Packaging unit	1 pc(s).
Net weight	3.5 kg
Gross weight	4.5 kg

Features

Customs tariff number	83024900
ETIM 9	EC011819
ETIM 8	EC011819
ECLASS 8.0	21100210
Product description	Monitor fastening for WS 540 with Vesa 75 and 100