Rittal – The System.

Faster – better – everywhere.

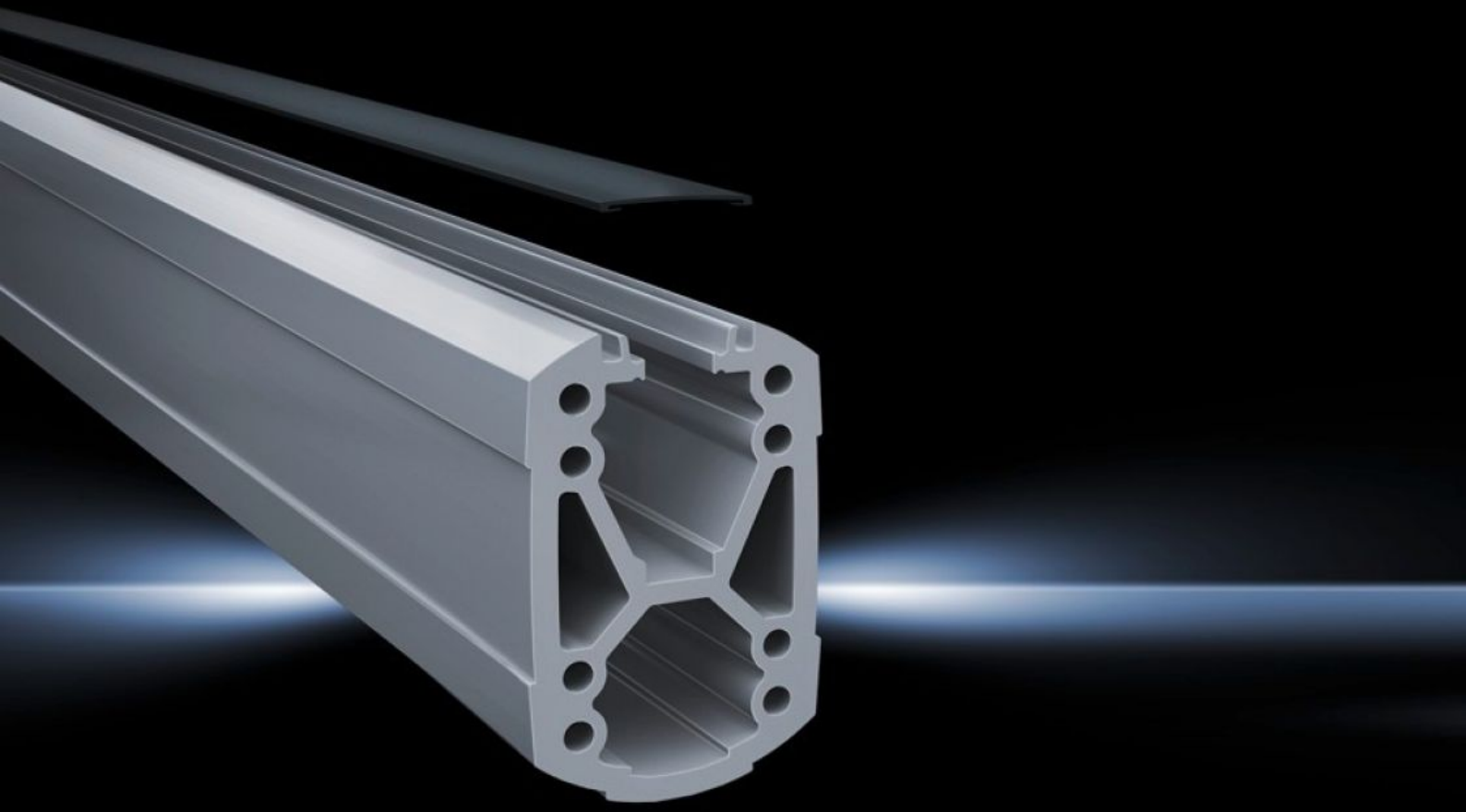

CP 6212.150

Support section CP 120

State: 11/29/2026 (Source: www.rittal.com/us-en)

ENCLOSURES | POWER DISTRIBUTION | CLIMATE CONTROL | IT INFRASTRUCTURE | SOFTWARE & SERVICES

FRIEDHELM LOH GROUP

CP 6212.150 - Support section CP 120 open

Attachment to the connection components with 4 self-tapping screws in the screw channel. May be cut to any required length, no thread-tapping required. Open cable duct for easy servicing access and for pre-assembled cables with connectors, lockable via cover profile. X-shaped profiling for greater load capacity, large cable routing channels. Upper channel suitable for cables with large connectors (e.g. DVI or VGA) and available/usable throughout the entire system.

Features

Model No.	CP 6212.150
Product description	Attached to the connection components with 4 self-tapping screws in the screw channel. May be cut to any required length, no thread-tapping required. Open cable duct for easy servicing access and for pre-assembled cables with connectors, lockable via cover profile. X-shaped profiling for greater load capacity, large cable routing channels. Upper channel suitable for cables with large connectors (e.g. DVI or VGA) and available/usable throughout the entire system.
Material	Support section: Extruded aluminum section Cover: Plastic
Color	Support section: RAL 7035 Cover: RAL 7024
Supply includes	Support section Clip-in lid
Length	500 mm 19.7 ″
Dimensions	Width: 75 mm Height: 120 mm Length: 500 mm Width: 2.95 ″ Height: 4.72 ″ Length: 19.7 ″
Packaging unit	1 pc(s).
Net weight	4.631 kg

© Rittal 2026

Features

Gross weight	4.831 kg
Customs tariff number	76042100
ETIM 9	EC000882
ECLASS 8.0	27400556
Product description	CP Support section CP 120, open, L: 500 mm

Approvals

Explanations	Manufacturer's declaration