Rittal – The System.

Faster – better – everywhere.

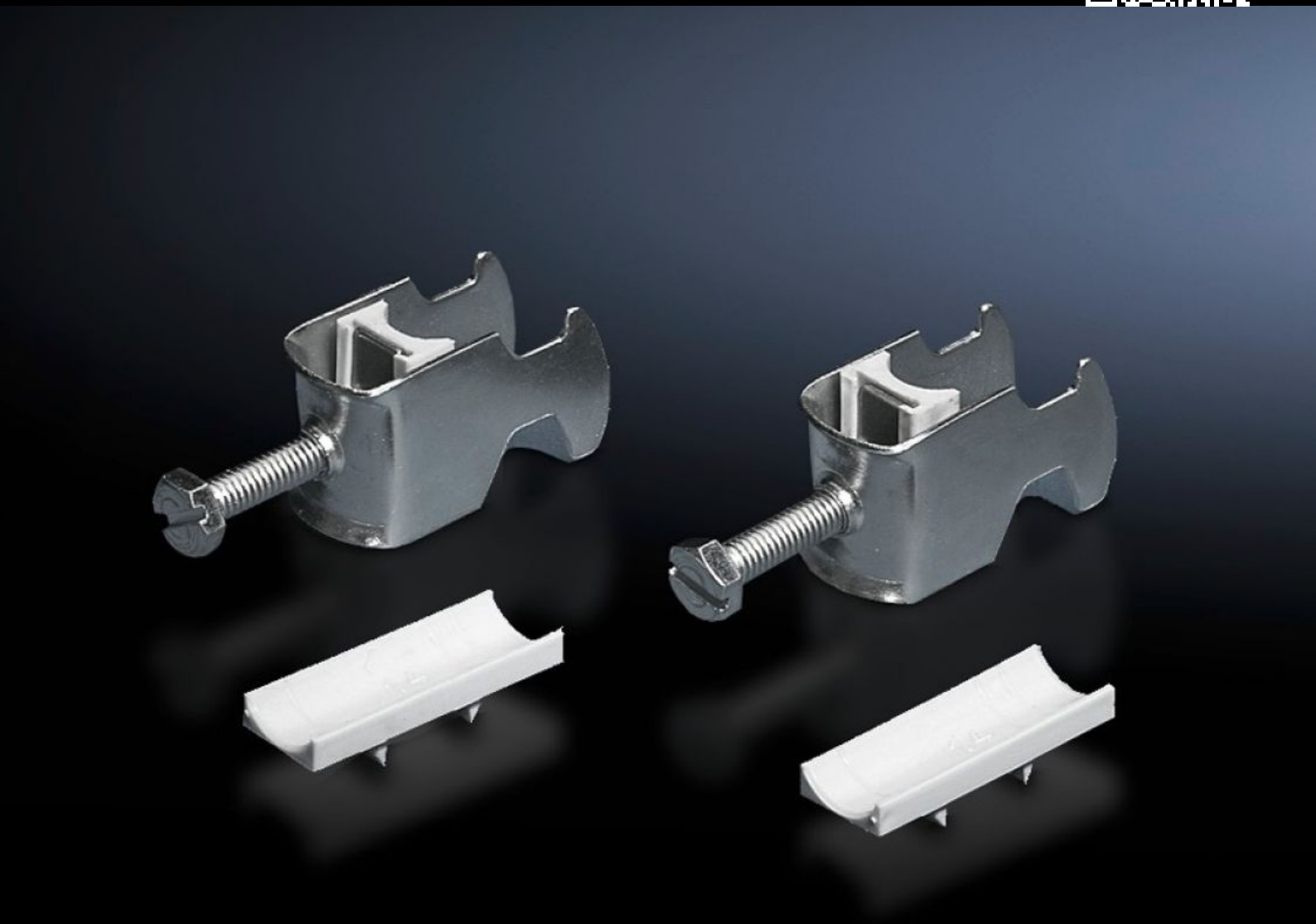

DK 7097.220

Cable clip

State: 11/29/2026 (Source: www.rittal.com/us-en)

ENCLOSURES | POWER DISTRIBUTION | CLIMATE CONTROL | IT INFRASTRUCTURE | SOFTWARE & SERVICES

FRIEDHELM LOH GROUP

DK 7097.220 - Cable clip for C-rail, combination rail

For attaching cables to the C rail.

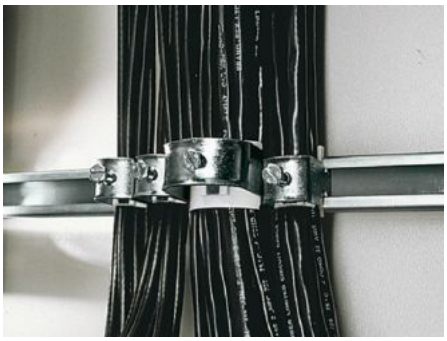

Features

Model No.	DK 7097.220
Version	for cable diameter 22 - 26 mm
Product description	For attaching cables to the C rail.
Material	Carbon steel
Surface finish	Zinc-plated
Supply includes	Plastic insert
Min. cable diameter	22 mm 0.87 ″
Max. cable diameter	26 mm 1.02 ″
Packaging unit	25 pc(s).
Net weight	1 kg
Gross weight	1.047 kg
PCF/VE (cradle-to-gate)	4.2 kg CO2 eq (Cat B)
Information regarding the PCF class	Category B: PCF value (cradle-to-gate) calculated approximately on the basis of the product weight and self-declared
Customs tariff number	73182900
ETIM 9	EC000454

Features

ETIM 8	EC000127
ECLASS 8.0	23140202
Product description	DK cable clamps, for cable diameter Ø: 22 - 26 mm

© Rittal 2026